FOREWORD

This wiring diagram manual has been prepared to provide information on the electrical system of the 1994 TOYOTA CAMRY.

Applicable models: SXV10 Series
MCV10 Series

For service specifications and repair procedures of the above models other than those listed in this manual, refer to the following manuals;

Manual Name	Pub. No.
• 1994 CAMRY Repair Manual Volume 1 Volume 2 • 1994 Model New Car Features	 RM361U1 RM361U2 NCF099U

All information in this manual is based on the latest product information at the time of publication. However, specifications and procedures are subject to change without notice.

TOYOTA MOTOR CORPORATION

NOTICE

When handling supplemental restraint system components (removal, installation or inspection, etc.), always follow the direction given in the repair manuals listed above to prevent accidents and supplemental restraint system malfunction.

INTRODUCTION

This manual consists of the following 11 sections:

No.	Section	Description
A	INDEX	Index of the contents of this manual.
	INTRODUCTION	Brief explanation of each section.
B	HOW TO USE THIS MANUAL	Instructions on how to use this manual.
C	TROUBLE–SHOOTING	Describes the basic inspection procedures for electrical circuits.
D	ABBREVIATIONS	Defines the abbreviations used in this manual.
E	GLOSSARY OF TERMS AND SYMBOLS	Defines the symbols and functions of major parts.
F	RELAY LOCATIONS	Shows position of the Electronic Control Unit, Relays, Relay Block, etc. This section is closely related to the system circuit.
G	ELECTRICAL WIRING ROUTING	Describes position of Parts Connectors, Splice points, Ground points, etc. This section is closely related to the system circuit.
H	POWER SOURCE (Current Flow Chart)	Describes power distribution from the power supply to various electrical loads.
I	INDEX	Index of the system circuits.
	SYSTEM CIRCUITS	Electrical circuits of each system are shown from the power supply through ground points. Wiring connections and their positions are shown and classified by code according to the connection method. (Refer to the section, “How to use this manual”). The “System Outline” and “Service Hints” useful for troubleshooting are also contained in this section.
J	GROUND POINTS	Shows ground positions of all parts described in this manual.
K	OVERALL WIRING DIAGRAM	Provides circuit diagrams showing the circuit connections.

This manual provides information on the electrical circuits installed on vehicles by dividing them into a circuit for each system.

The actual wiring of each system circuit is shown from the point where the power source is received from the battery as far as each ground point. (All circuit diagrams are shown with the switches in the OFF position.)

When troubleshooting any problem, first understand the operation of the circuit where the problem was detected (see System Circuit section), the power source supplying power to that circuit (see Power Source section), and the ground points (see Ground Points section). See the System Outline to understand the circuit operation.

When the circuit operation is understood, begin troubleshooting of the problem circuit to isolate the cause. Use Relay Location and Electrical Wire Routing sections to find each part, junction block and wiring harness connectors, wiring harness and wiring harness connectors, splice points, and ground points of each system circuit. Internal wiring for each junction block is also provided for better understanding of connection within a junction block.

Wiring related to each system is indicated in each system circuit by arrows (from __ , to __). When overall connections are required, see the Overall Wiring Diagram at the end of this manual.

* The system shown here is an EXAMPLE ONLY. It is different to the actual circuit shown in the SYSTEM CIRCUITS SECTION.

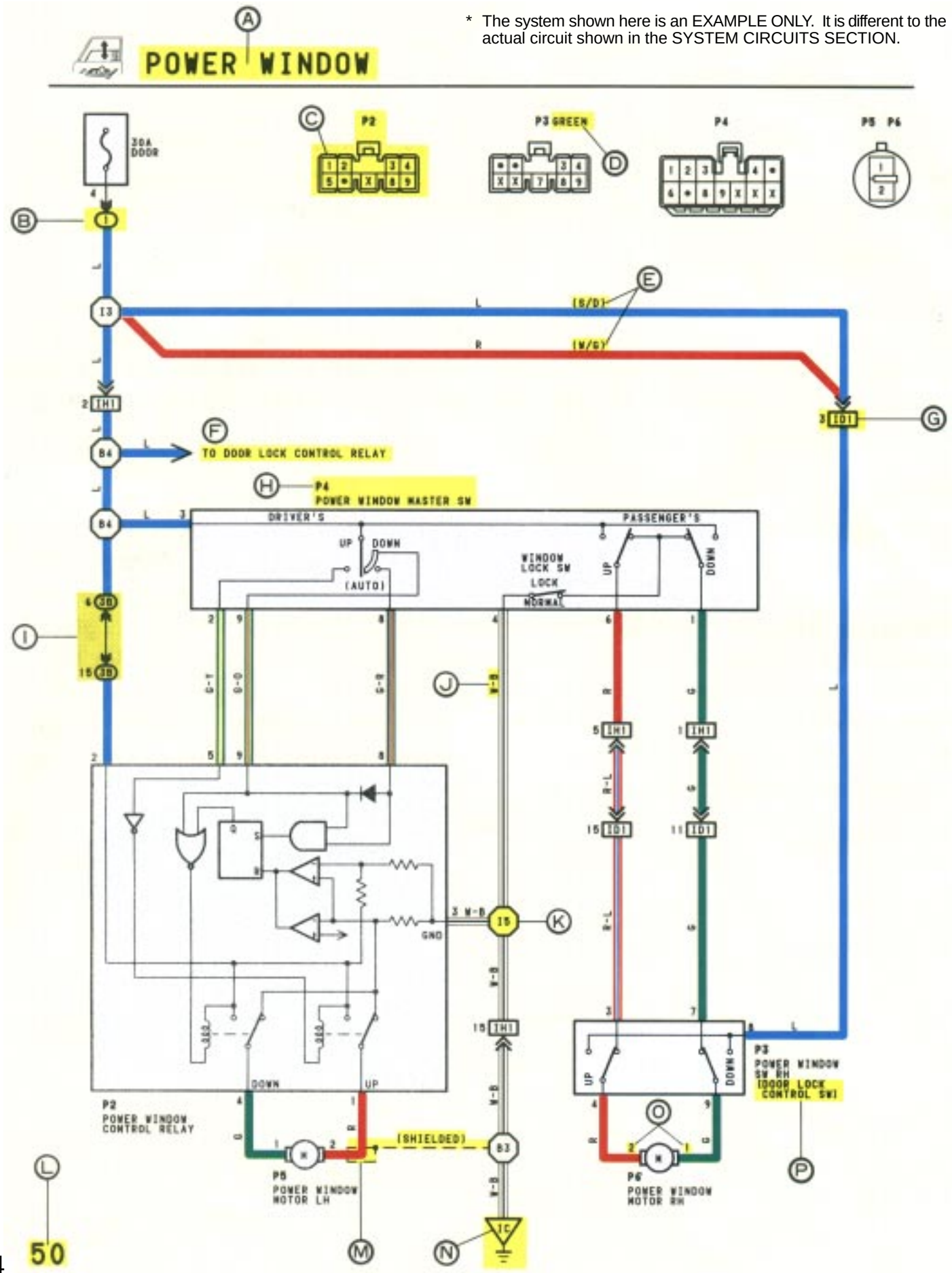

Ⓐ : System Title

Ⓑ : Indicates a Relay Block. No shading is used and only the Relay Block No. is shown to distinguish it from the J/B.

Example: Indicates Relay Block No. 1.

Ⓒ : Indicates the connector to be connected to a part (the numeral indicates the pin No.)

Explanation of pin use.

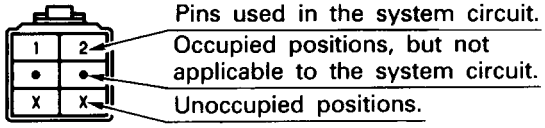

The pins shown are only for the highest grade, or only include those in the specification.

Ⓓ : Connector Color

Connectors not indicated are milky white in color.

Ⓔ : ( ) is used to indicate different wiring and connector, etc. when the vehicle model, engine type, or specification is different.

Ⓕ : Indicates related system.

Ⓖ : Indicates the wiring harness and wiring harness connector. The wiring harness with male terminal is shown with arrows (⩔).

Outside numerals are pin numbers.

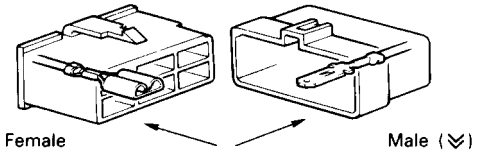

The first letter of the code for each wiring harness and wiring harness connector(s) indicates the component's location, e.g., "E" for the Engine Compartment, "I" for the Instrument Panel and Surrounding area, and "B" for the Body and Surrounding area.

When more than one code has the first and second letters in common, followed by numbers (e.g., IH1, IH2), this indicates the same type of wiring harness and wiring harness connector.

Ⓗ : Represents a part (all parts are shown in sky blue). The code is the same as the code used in parts position.

Ⓘ : Junction Block (The number in the circle is the J/B No. and the connector code is shown beside it). Junction Blocks are shaded to clearly separate them from other parts (different junction blocks are shaded differently for further clarification).

Example:

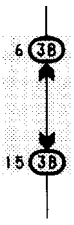

3B indicates that it is inside Junction Block No. 3.

Ⓙ : Indicates the wiring color.

Wire colors are indicated by an alphabetical code.

B	= Black	L	= Blue	R	= Red
BR	= Brown	LG	= Light Green	V	= Violet
G	= Green	O	= Orange	W	= White
GR	= Gray	P	= Pink	Y	= Yellow

The first letter indicates the basic wire color and the second letter indicates the color of the stripe.

Example: L – Y

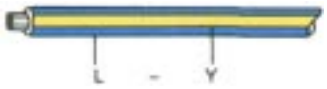

(Blue) (Yellow)

Ⓚ : Indicates a wiring Splice Point (Codes are "E" for the Engine Room, "I" for the Instrument Panel, and "B" for the Body).

Example:

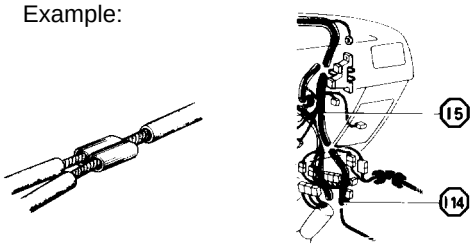

The Location of Splice Point I 5 is indicated by the shaded section.

Ⓛ : Page No.

Ⓜ : Indicates a shielded cable.

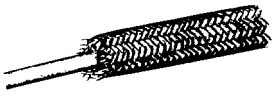

Ⓝ : Indicates a ground point.

The first letter of the code for each ground point(s) indicates the component's location, e.g., "E" for the Engine Compartment, "I" for the Instrument Panel and Surrounding area, and "B" for the Body and Surrounding area.

Ⓞ : Indicates the pin number of the connector.

The numbering system is different for female and male connectors.

Example:

Numbered in order from upper left to lower right

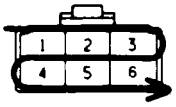

Female

Numbered in order from upper right to lower left

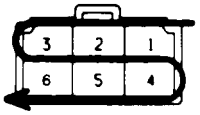

Male

Ⓟ : When 2 parts both use one connector in common, the parts connector name used in the wire routing section is shown in square brackets [ ].

Q

SYSTEM OUTLINE

WITH THE IGNITION SW TURNED ON, THE CURRENT FLOWS TO TERMINAL 3 OF THE POWER WINDOW MASTER SW, TERMINAL 2 OF THE POWER WINDOW CONTROL RELAY AND TERMINAL 8 OF THE POWER WINDOW SW THROUGH THE DOOR FUSE.

1. DRIVER'S WINDOW "MANUAL UP" OPERATION BY MASTER SW

HOLDING MANUAL SW (DRIVER'S) ON "UP" POSITION LOCATED IN POWER WINDOW MASTER SW, THE CURRENT FLOWS TO TERMINAL 5 OF THE POWER WINDOW CONTROL RELAY THROUGH TERMINAL 3 OF THE MASTER SW → TERMINAL 2 TO OPERATE A POWER WINDOW CONTROL RELAY. THUS THE CURRENT INSIDE THE RELAY FLOWS FROM TERMINAL 2 OF THE RELAY → TERMINAL 1 → TERMINAL 2 OF THE POWER WINDOW MOTOR → TERMINAL 1 → TERMINAL 4 OF THE RELAY → TERMINAL 3 → TO GROUND. THE MOTOR TURNS TO ASCENT THE WINDOW. RELEASING THIS SW, THE ROTATION OF MOTOR IS STOPPED AND THE WINDOWS CAN STOP AT WILL POINT.

(FOR THE "MANUAL DOWN" OPERATION, CURRENT FLOWS IN THE REVERSE DIRECTION BECAUSE THE TERMINALS WHERE IT FLOWS ARE CHANGED).

2. DRIVER'S WINDOW "AUTO DOWN" OPERATION BY MASTER SW

ONCE THE "AUTO DOWN" BUTTON OF THE MASTER SW IS PUSHED, THE CURRENT FLOWS TERMINAL 9 OF THE POWER WINDOW CONTROL RELAY THROUGH TERMINAL 3 OF THE MASTER SW → TERMINALS 8 AND 9 TO OPERATE THE RELAY. THUS THE CURRENT INSIDE THE POWER WINDOW CONTROL RELAY FLOWS FROM TERMINAL 2 OF THE RELAY → TERMINAL 4 → TERMINAL 1 OF THE POWER WINDOW MOTOR → TERMINAL 2 → TERMINAL 1 OF THE RELAY → TERMINAL 3 → TO GROUND. THE MOTOR CONTINUES THE ROTATION ENABLING TO DESCENT THE WINDOW.

THE WINDOW DESCENDS TO THE END POSITION. THE CURRENT WILL BE CUT OFF TO RELEASE THE AUTO DOWN FUNCTION BASED ON THE INCREASING CURRENT BETWEEN TERMINAL 2 OF THE RELAY AND TERMINAL 1 IN RELAY.

3. DRIVER'S WINDOW AUTO DOWN RELEASE OPERATION BY MASTER SW

HOLDING THE MANUAL SW (DRIVER'S) ON "UP" POSITION IN OPERATING AUTO DOWN. THE CURRENT FROM TERMINAL 3 OF THE MASTER SW PASSING TERMINAL 2 FLOWS TERMINAL 5 OF THE RELAY AND RELEASES THE AUTO DOWN FUNCTION IN THE POWER WINDOW CONTROL RELAY. RELEASING THE HAND FROM SW, WINDOW STOPS AND CONTINUING ON TOUCHING SW, THE FUNCTION SWITCHES TO MANUAL UP OPERATION.

4. PASSENGER'S WINDOW UP OPERATION (MASTER SW) AND WINDOW LOCK SW OPERATION

HOLDING PASSENGER'S WINDOW SW (MASTER SW) ON "UP", THE CURRENT FLOWS FROM TERMINAL 3 OF THE MASTER SW PASSING TERMINAL 6 TO TERMINAL 3 OF THE POWER WINDOW SW (PASSENGER'S) → TERMINAL 4 → TERMINAL 2 OF THE MOTOR → TERMINAL 1 → TERMINAL 9 OF THE POWER WINDOW SW → TERMINAL 7 → TERMINAL 1 OF THE MASTER SW → TERMINAL 4 TO GROUND. THE MOTOR RUNS TO ASCENT THE WINDOW. RELEASING THIS SW, THE ROTATION OF MOTOR IS STOPPED AND WINDOW CAN STOP AT WILL PLACE.

SWITCHING THE WINDOW LOCK SW IN "LOCK" POSITION, THE CIRCUIT IS OPENED AND STOPPED THE MOTOR ROTATION.

(FOR THE DOWN OPERATION, CURRENT FLOWS IN THE REVERSE DIRECTION BECAUSE THE TERMINALS WHERE IT FLOWS ARE CHANGED).

R

SERVICE HINTS

P2 POWER WINDOW CONTROL RELAY

3–GROUND: ALWAYS CONTINUITY

2–GROUND: APPROX. **12** VOLTS WITH IGNITION SW AT **ON** POSITION

5–GROUND: APPROX. **12** VOLTS WITH IGNITION SW AT **ON** POSITION AND MASTER SW AT **UP** POSITION

8–GROUND: APPROX. **12** VOLTS WITH IGNITION SW AT **ON** POSITION AND MASTER SW AT **AUTO DOWN** POSITION

9–GROUND: APPROX. **12** VOLTS WITH IGNITION SW AT **ON** POSITION AND MASTER SW AT **DOWN** OR **AUTO DOWN** POSITION

P 4 POWER WINDOW MASTER SW

4–GROUND: ALWAYS CONTINUITY

3–GROUND: APPROX. **12** VOLTS WITH IGNITION SW AT **ON** POSITION

WINDOW LOCK SW

OPEN WITH WINDOW LOCK SW AT **LOCK** POSITION

S

: PARTS LOCATION

CODE	SEE PAGE	CODE	SEE PAGE	CODE	SEE PAGE
P2	21	**P4**	21	**P6**	21
P3	21	**P5**	21		

T

: RELAY BLOCKS

CODE	SEE PAGE	RELAY BLOCK (RELAY BLOCK LOCATION)
1	16	R/B NO. 1 (INSTRUMENT PANEL LEFT SIDE)

U

: JUNCTION BLOCK AND WIRE HARNESS CONNECTOR

CODE	SEE PAGE	JUNCTION BLOCK AND WIRE HARNESS (CONNECTOR LOCATION)
3B	14	J/B NO. 3 AND COWL WIRE (INSTRUMENT PANEL LEFT SIDE)

V

: CONNECTOR JOINING WIRE HARNESS AND WIRE HARNESS

CODE	SEE PAGE	JOINING WIRE HARNESS AND WIRE HARNESS (CONNECTOR LOCATION)
ID1	26	FRONT DOOR RH WIRE AND COWL WIRE (RIGHT KICK PANEL)
IH1	26	FRONT DOOR LH WIRE AND COWL WIRE (LEFT KICK PANEL)

W

: GROUND POINTS

CODE	SEE PAGE	GROUND POINT LOCATION
IC	24	COWL LEFT

X

: SPLICE POINTS

CODE	SEE PAGE	WIRE HARNESSES WITH SPLICE POINTS
I5	24	COWL WIRE

Ⓠ : Explains the system outline.

Ⓡ : Indicates values or explains the function for reference during troubleshooting.

Ⓢ : Indicates the reference page showing the position on the vehicle of the parts in the system circuit.

Example: Part “P4” (Power Window Master SW) is on page 21 of the manual.

* The letter in the code is from the first letter of the part, and the number indicates its order in parts starting with that letter.

Example: P 4

- 4 — Part is 4th in order
- P — Power Window Master SW

Ⓣ : Indicates the reference page showing the position on the vehicle of Relay Block Connectors in the system circuit.

Example: Connector “1” is described on page 16 of this manual and is installed on the left side of the instrument panel.

Ⓤ : Indicates the reference page showing the position on the vehicle of J/B and Wire Harness in the system circuit.

Example: Connector “3B” connects the Cowl Wire and J/B No. 3. It is described on page 14 of this manual, and is installed on the instrument panel left side.

Ⓥ : Indicates the reference page describing the wiring harness and wiring harness connector (the female wiring harness is shown first, followed by the male wiring harness).

Example: Connector “ID1” connects the front door RH wire (female) and cowl wire (male). It is described on page 26 of this manual, and is installed on the right side kick panel.

Ⓦ : Indicates the reference page showing the position of the ground points on the vehicle.

Example: Ground point “IC” is described on page 24 of this manual and is installed on the cowl left side.

Ⓧ : Indicates the reference page showing the position of the splice points on the vehicle.

Example: Splice point “I 5” is on the Cowl Wire Harness and is described on page 24 of this manual.

HINT:

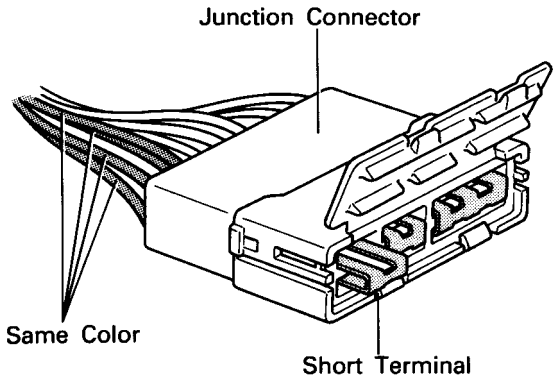

Junction connector (code: J1, J2, J3, J4, J5, J6, J7) in this manual include a short terminal which is connected to a number of wire harnesses. Always perform inspection with the short terminal installed. (When installing the wire harnesses, the harnesses can be connected to any position within the short terminal grouping.

Accordingly, in other vehicles, the same wire harness from a different part.)

Wire harness sharing the same short terminal grouping have the same color.

The “Current Flow Chart” section, describes which parts each power source (fuses, fusible links, and circuit breakers) transmits current to. In the Power Source circuit diagram, the conditions when battery power is supplied to each system are explained. Since all System Circuit diagrams start from the power source, the power source system must be fully understood.

POWER SOURCE (Current Flow Chart)

The chart below shows the route by which current flows from the battery to each electrical source (Fusible Link, Circuit Breaker, Fuse, etc.) and other parts.

The next page and following pages show the parts to which each electrical source outputs current.

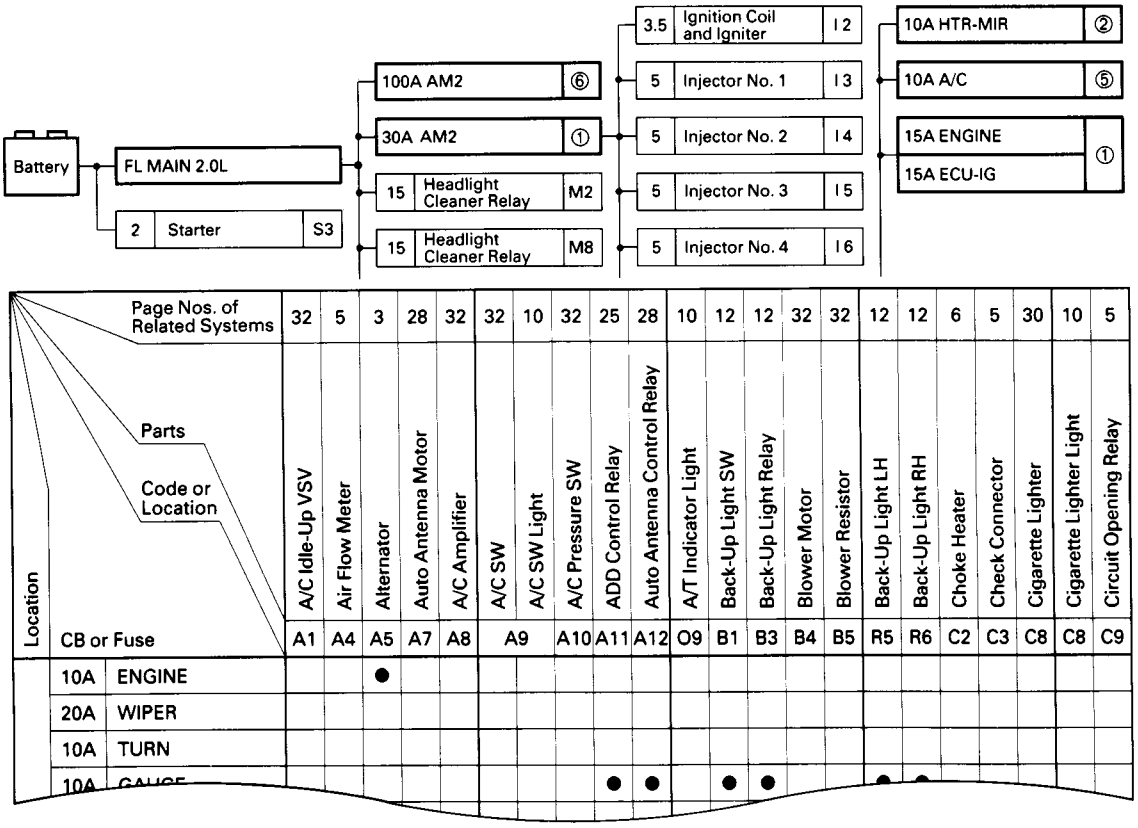

POWER SOURCE

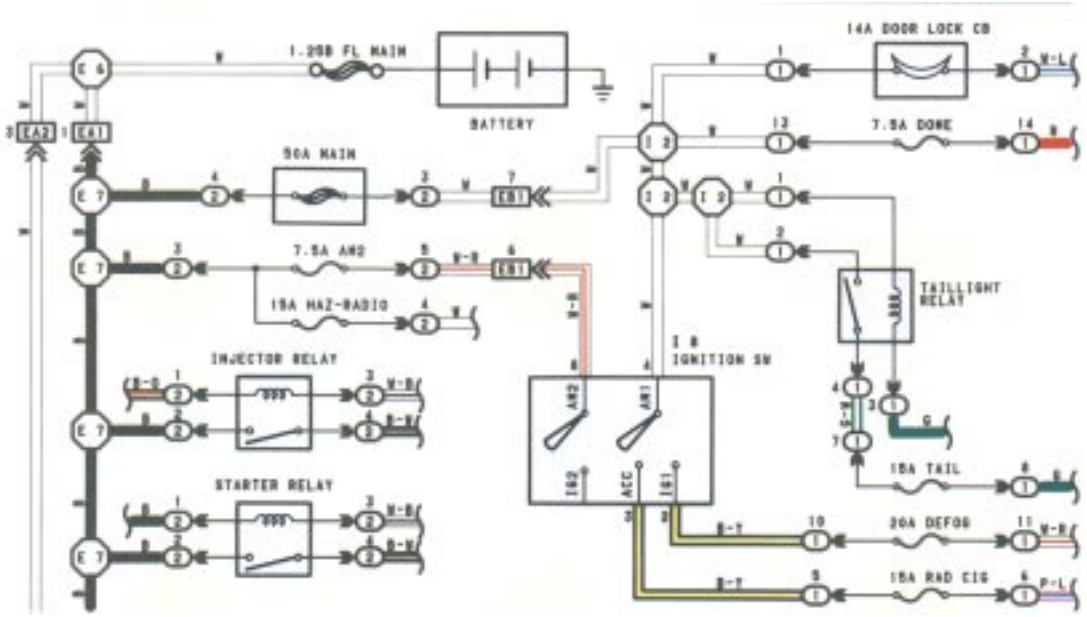

* The system shown here is an EXAMPLE ONLY. It is different to the actual circuit shown in the SYSTEM CIRCUITS SECTION.

The ground points circuit diagram shows the connections from all major parts to the respective ground points. When troubleshooting a faulty ground point, checking the system circuits which use a common ground may help you identify the problem ground quickly. The relationship between ground points (EA , IB , and IC shown below) can also be checked this way.

GROUND POINT

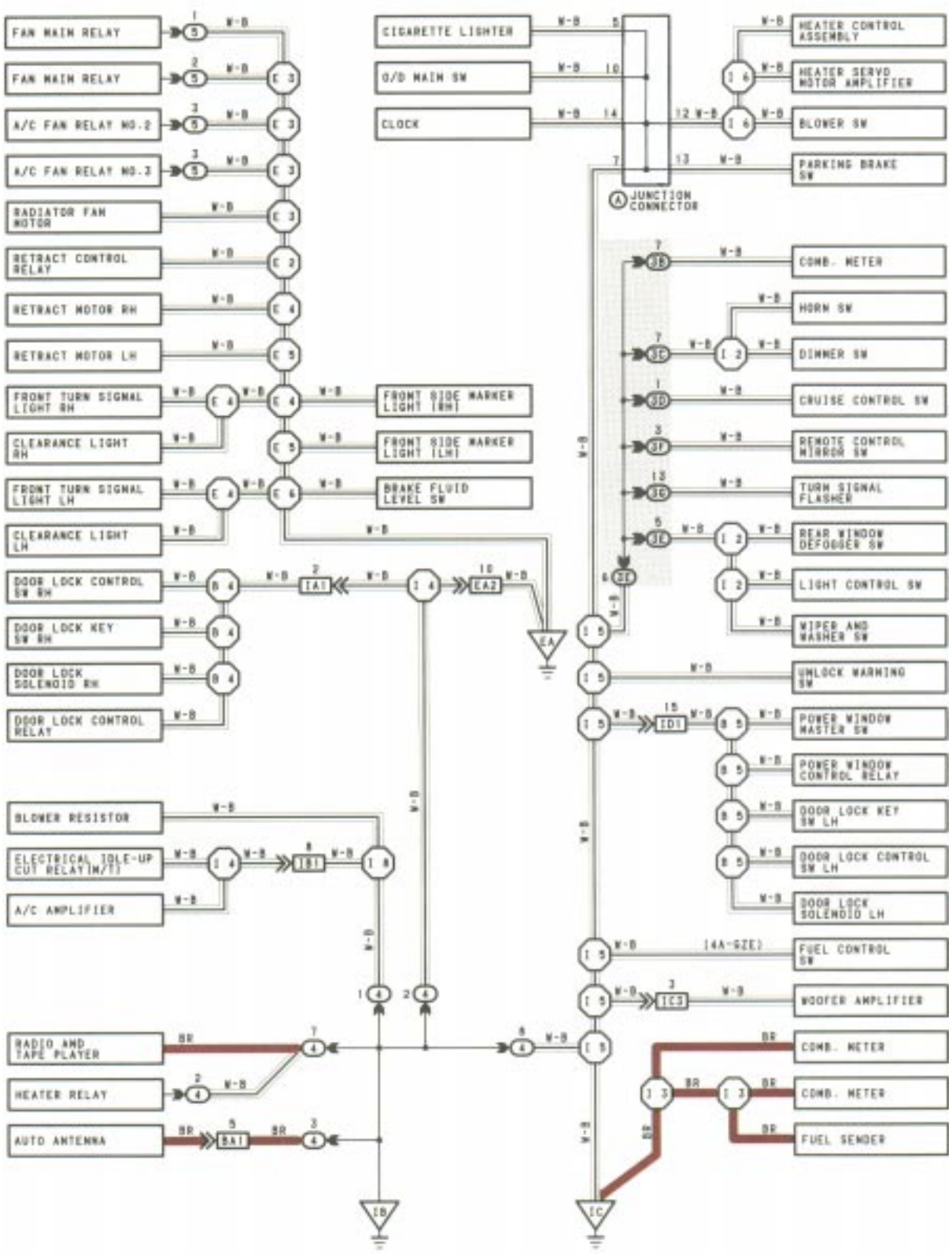

* The system shown here is an EXAMPLE ONLY. It is different to the actual circuit shown in the SYSTEM CIRCUITS SECTION.

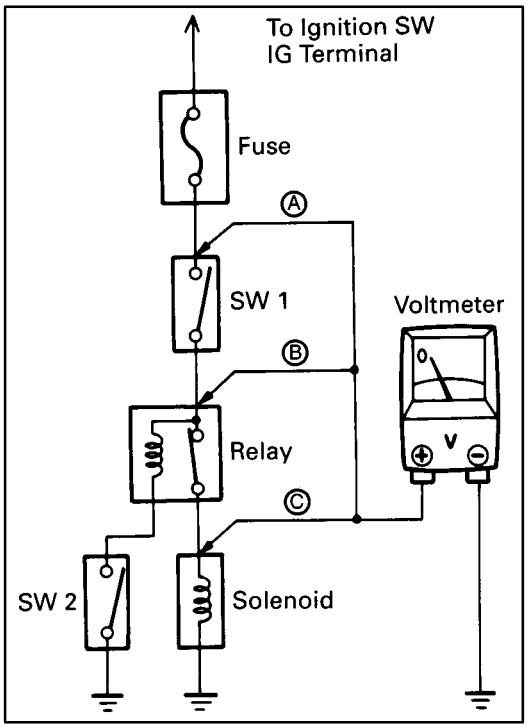

VOLTAGE CHECK

(a) Establish conditions in which voltage is present at the check point.

Example:

Ⓐ – Ignition SW on

Ⓑ – Ignition SW and SW 1 on

Ⓒ – Ignition SW, SW 1 and Relay on (SW 2 off)

(b) Using a voltmeter, connect the negative lead to a good ground point or negative battery terminal, and the positive lead to the connector or component terminal. This check can be done with a test light instead of a voltmeter.

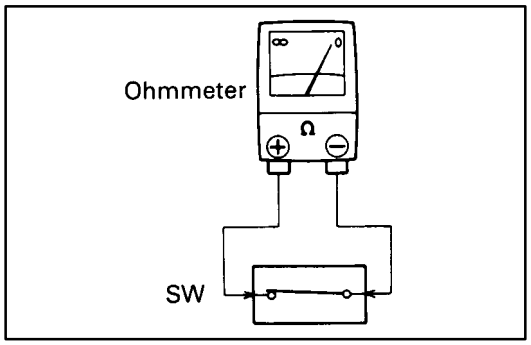

CONTINUITY AND RESISTANCE CHECK

(a) Disconnect the battery terminal or wire so there is no voltage between the check points.

(b) Contact the two leads of an ohmmeter to each of the check points.

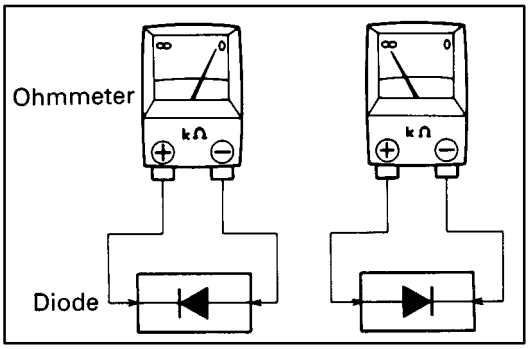

If the circuit has diodes, reverse the two leads and check again.

When contacting the negative lead to the diode positive side and the positive lead to the negative side, there should be continuity.

When contacting the two leads in reverse, there should be no continuity.

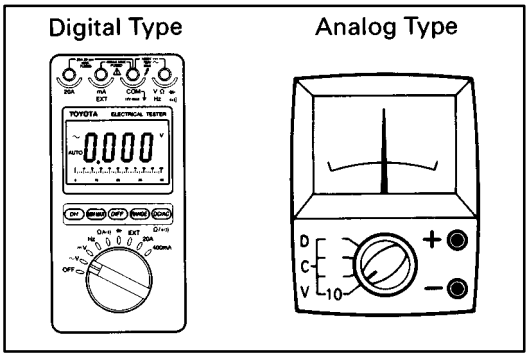

(c) Use a volt/ohmmeter with high impedance (10 kΩ/V minimum) for troubleshooting of the electrical circuit.

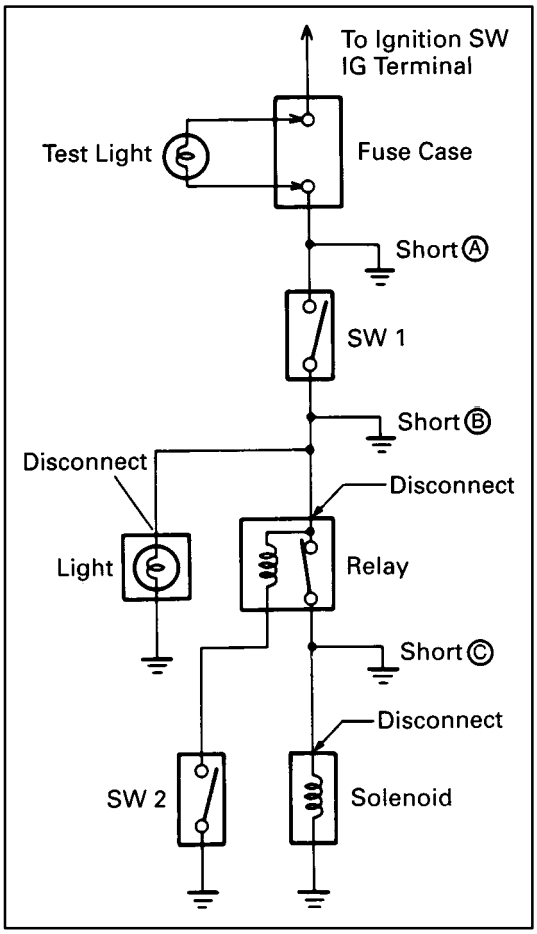

FINDING A SHORT CIRCUIT

(a) Remove the blown fuse and disconnect all loads of the fuse.

(b) Connect a test light in place of the fuse.

(c) Establish conditions in which the test light comes on.

Example:

Ⓐ – Ignition SW on

Ⓑ – Ignition SW and SW 1 on

Ⓒ – Ignition SW, SW 1 and Relay on (Connect the Relay) and SW 2 off (or Disconnect SW 2)

(d) Disconnect and reconnect the connectors while watching the test light.

The short lies between the connector where the test light stays lit and the connector where the light goes out.

(e) Find the exact location of the short by lightly shaking the problem wire along the body.

CAUTION

(a) Do not open the cover or the case of the ECU unless absolutely necessary. (If the IC terminals are touched, the IC may be destroyed by static electricity.)

(b) When replacing the internet mechanism (ECU part) of the digital meter, be careful that no part of your body or clothing comes in contact with the terminals of leads from the IC, etc. of the replacement part (spare part).

DISCONNECTION OF MALE AND FEMALE CONNECTORS

To pull apart the connectors, pull on the connector itself, not the wire harness.

HINT: Check to see what kind of connector you are disconnecting before pulling apart.

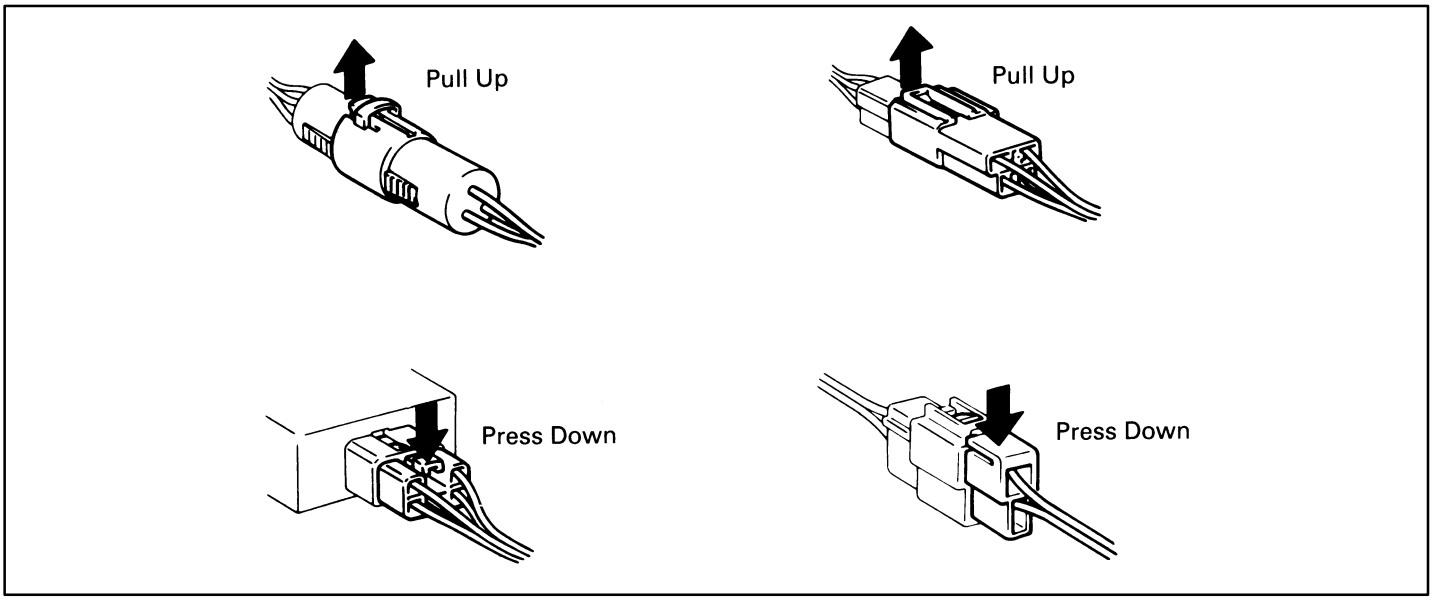

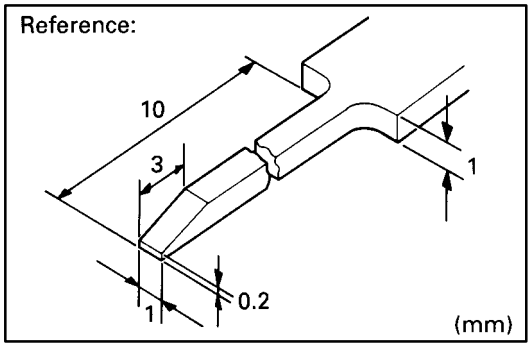

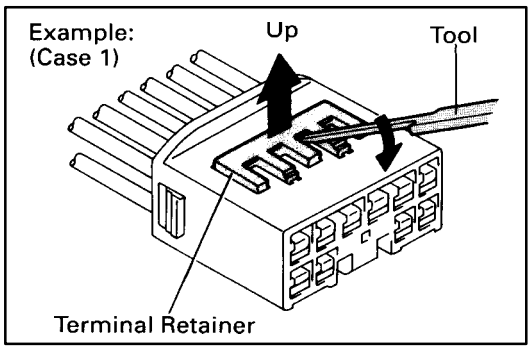

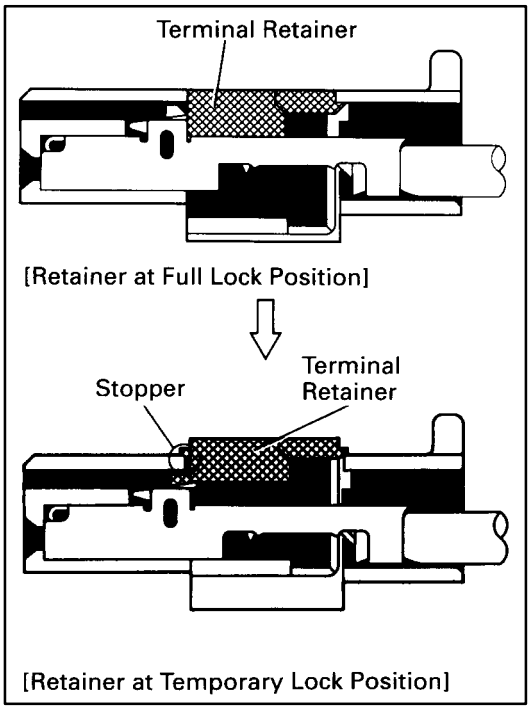

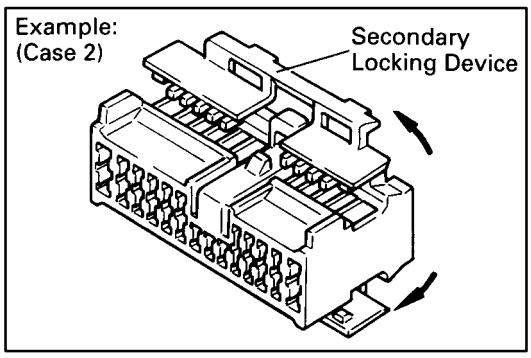

HOW TO REPLACE TERMINAL

(with terminal retainer or secondary locking device)

1. PREPARE THE SPECIAL TOOL

   HINT: To remove the terminal from the connector, please construct and use the special tool or like object shown on the left.

2. DISCONNECT CONNECTOR

3. DISENGAGE THE SECONDARY LOCKING DEVICE OR TERMINAL RETAINER.

   (a) Locking device must be disengaged before the terminal locking clip can be released and the terminal removed from the connector.

   (b) Use a special tool or the terminal pick to unlock the secondary locking device or terminal retainer.

NOTICE:

Do not remove the terminal retainer from connector body.

Ⓐ For Non–Waterproof Type Connector

HINT: The needle insertion position varies according to the connector's shape (number of terminals etc.), so check the position before inserting it.

"Case 1"

Raise the terminal retainer up to the temporary lock position.

"Case 2"

Open the secondary locking device.

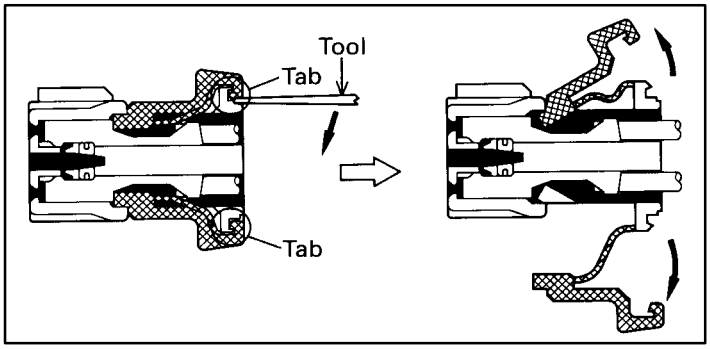

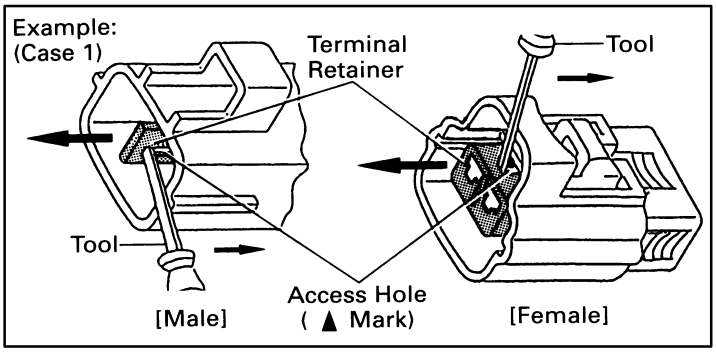

Ⓑ For Waterproof Type Connector

HINT: Terminal retainer color is different according to connector body.

Example:

Terminal Retainer	Connector Body
Black or White	: Gray
Black or White	: Dark Gray
Gray or White	: Black

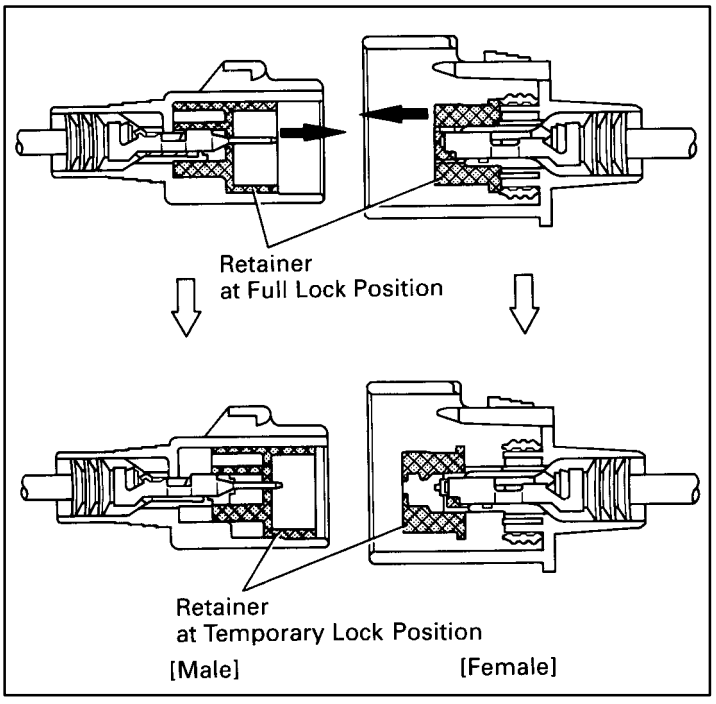

"Case 1"

Type where terminal retainer is pulled up to the temporary lock position (Pull Type).

Insert the special tool into the terminal retainer access hole (▲ Mark) and pull the terminal retainer up to the temporary lock position.

HINT: The needle insertion position varies according to the connector's shape (Number of terminals, etc.), so check the position before inserting it.

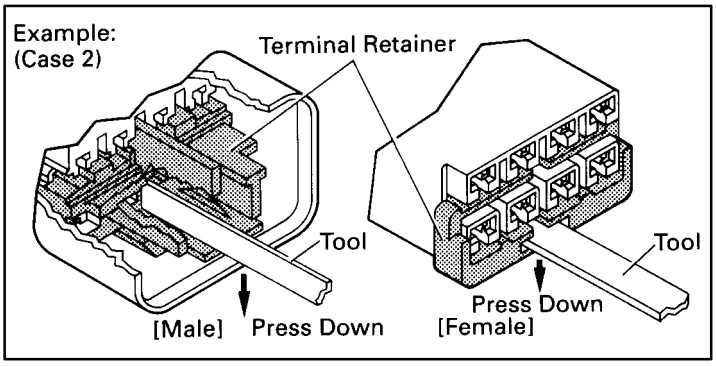

"Case 2"

Type which cannot be pulled as far as Power Lock insert the tool straight into the access hole of terminal retainer as shown.

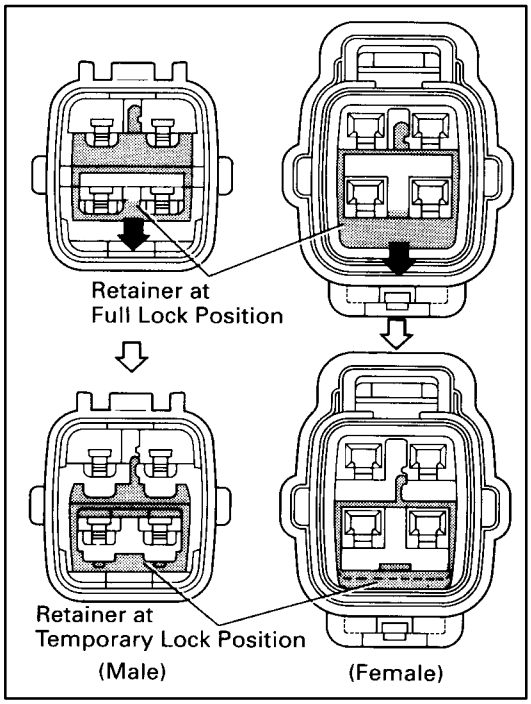

Push the terminal retainer down to the temporary lock position.

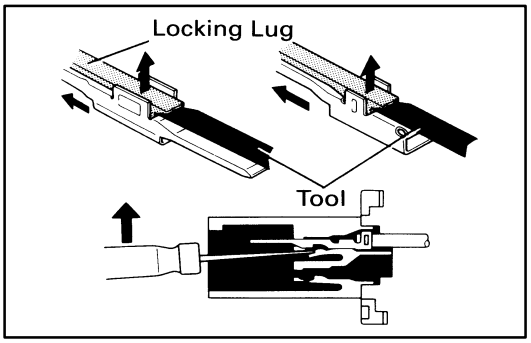

(c) Release the locking lug from terminal and pull the terminal out from rear.

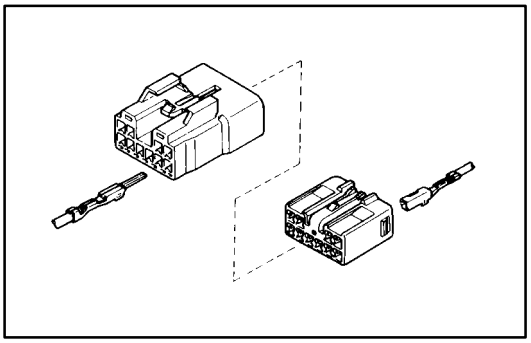

4. INSTALL TERMINAL TO CONNECTOR

(a) Insert the terminal.

HINT:

1. Make sure the terminal is positioned correctly.
2. Insert the terminal until the locking lug locks firmly.
3. Insert the terminal with terminal retainer in the temporary lock position.

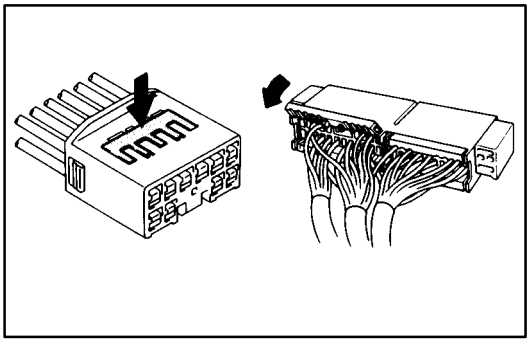

(b) Push the secondary locking device or terminal retainer in to the full lock position.

5. CONNECT CONNECTOR

ABBREVIATIONS

The following abbreviations are used in this manual.

ABS	=	Anti–Lock Brake System
ACIS	=	Acoustic Control Induction System
A/C	=	Air Conditioning
A/T	=	Automatic Transmission
COMB.	=	Combination
C/P	=	Coupe
ECU	=	Electronic Control Unit
EFI	=	Electronic Fuel Injection
EGR	=	Exhaust Gas Recirculation
ESA	=	Electronic Spark Advance
Ex.	=	Except
FL	=	Fusible Link
IAC	=	Idle Air Control
ISC	=	Idle Speed Control
J/B	=	Junction Block
LH	=	Left-Hand
MFI	=	Multiport Fuel Injection
M/T	=	Manual Transmission
O/D	=	Overdrive
R/B	=	Relay Block
RH	=	Right–Hand
RPM	=	Engine Speed
S/D	=	Sedan
SFI	=	Sequential Multiport Fuel Injection
SRS	=	Supplemental Restraint System
SW	=	Switch
TEMP.	=	Temperature
VSV	=	Vacuum Switching Valve
W/G	=	Wagon
w/	=	With
w/o	=	Without

***** The titles given inside the components are the names of the terminals (terminal codes) and are not treated as being abbreviations.

GLOSSARY OF TERMS AND SYMBOLS

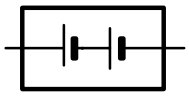

BATTERY

Stores chemical energy and converts it into electrical energy. Provides DC current for the auto's various electrical circuits.

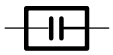

CAPACITOR (Condenser)

A small holding unit for temporary storage of electrical voltage.



CIGARETTE LIGHTER

An electric resistance heating element.

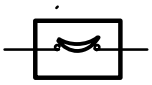

CIRCUIT BREAKER

Basically a reusable fuse, a circuit breaker will heat and open if too much current flows through it. Some units automatically reset when cool, others must be manually reset.



DIODE

A semiconductor which allows current flow in only one direction.



DIODE, ZENER

A diode which allows current flow in one direction but blocks reverse flow only up to a specific voltage. Above that potential, it passes the excess voltage. This acts as a simple voltage regulator.



DISTRIBUTOR, IIA

Channels high–voltage current from the ignition coil to the individual spark plugs.



FUSE

A thin metal strip which burns through when too much current flows through it, thereby stopping current flow and protecting a circuit from damage.

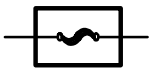

(for Medium Current Fuse)

FUSIBLE LINK

A heavy–gauge wire placed in high amperage circuits which burns through on overloads, thereby protecting the circuit. The numbers indicate the cross–section surface area of the wires.



(for High Current Fuse or Fusible Link.)



GROUND

The point at which wiring attaches to the Body, thereby providing a return path for an electrical circuit; without a ground, current cannot flow.

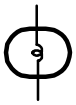

HEADLIGHTS

1. SINGLE FILAMENT

Current flow causes a headlight filament to heat up and emit light. A headlight may have either a single (1) filament or a double (2) filament.



2. DOUBLE FILAMENT



HORN

An electric device which sounds a loud audible signal.

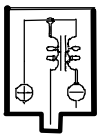

IGNITION COIL

Converts low–voltage DC current into high–voltage ignition current for firing the spark plugs.



LIGHT

Current flow through a filament causes the filament to heat up and emit light.



LED (LIGHT EMITTING DIODE)

Upon current flow, these diodes emit light without producing the heat of a comparable light.



METER, ANALOG

Current flow activates a magnetic coil which causes a needle to move, thereby providing a relative display against a background calibration.



METER, DIGITAL

Current flow activates one or many LED's, LCD's, or fluorescent displays, which provide a relative or digital display.



MOTOR

A power unit which converts electrical energy into mechanical energy, especially rotary motion.

RELAY

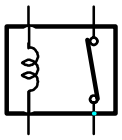

1. NORMALLY CLOSED

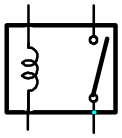

2. NORMALLY OPEN

Basically, an electrically operated switch which may be normally closed (1) or open (2).

Current flow through a small coil creates a magnetic field which either opens or closes an attached switch.

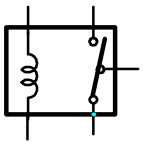

RELAY, DOUBLE THROW

A relay which passes current through one set of contacts or the other.



RESISTOR

An electrical component with a fixed resistance, placed in a circuit to reduce voltage to a specific value.



RESISTOR, TAPPED

A resistor which supplies two or more different non adjustable resistance values.

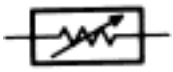

RESISTOR, VARIABLE or RHEOSTAT

A controllable resistor with a variable rate of resistance. Also called a potentiometer or rheostat.

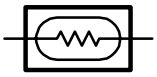

SENSOR (Thermistor)

A resistor which varies its resistance with temperature.



SENSOR, ANALOG SPEED

Uses magnetic impulses to open and close a switch to create a signal for activation of other components.

SHORT PIN

Used to provide an unbroken connection within a junction block.



SOLENOID

An electromagnetic coil which forms a magnetic field when current flows, to move a plunger, etc.

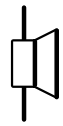

SPEAKER

An electromechanical device which creates sound waves from current flow.

SWITCH, MANUAL

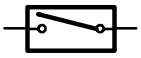

1. NORMALLY OPEN

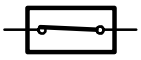

2. NORMALLY CLOSED

Opens and closes circuits, thereby stopping (1) or allowing (2) current flow.

SWITCH, DOUBLE THROW

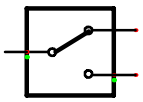

A switch which continuously passes current through one set of contacts or the other.

SWITCH, IGNITION

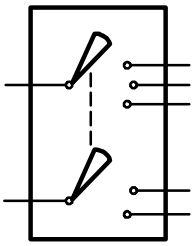

A key operated switch with several positions which allows various circuits, particularly the primary ignition circuit, to become operational.

SWITCH, WIPER PARK

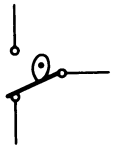

Automatically returns wipers to the stop position when the wiper switch is turned off.

TRANSISTOR

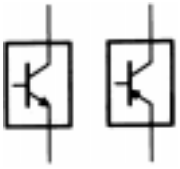

A solidstate device typically used as an electronic relay; stops or passes current depending on the voltage applied at “base.”

WIRES



(1) NOT CONNECTED

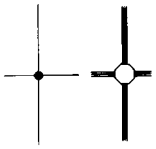

(2) SPLICED

Wires are always drawn as straight lines on wiring diagrams. Crossed wires (1) without a black dot at the junction are not joined; crossed wires (2) with a black dot or octagonal (◯) mark at the junction are spliced (joined) connections.

RELAY LOCATIONS

[Engine Compartment]

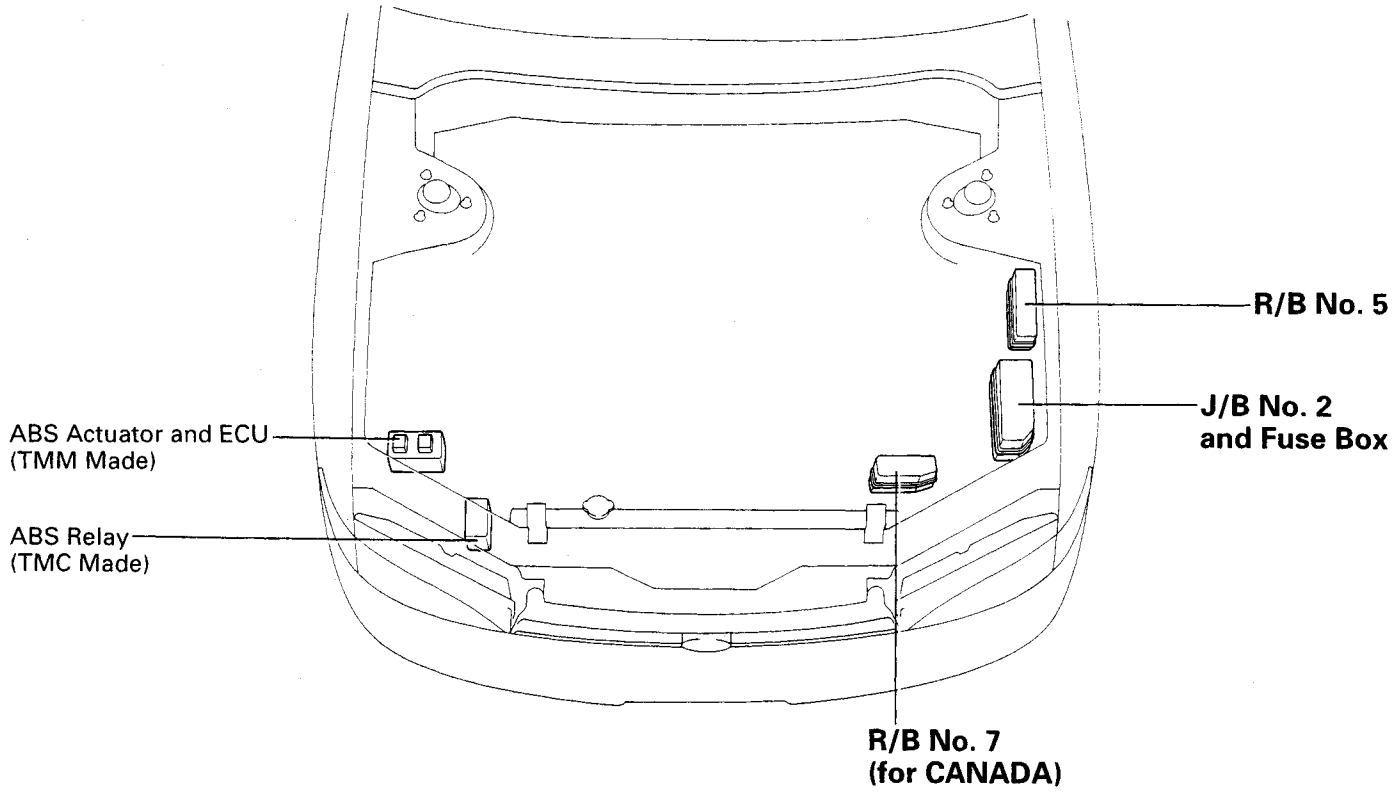

[Instrument Panel]

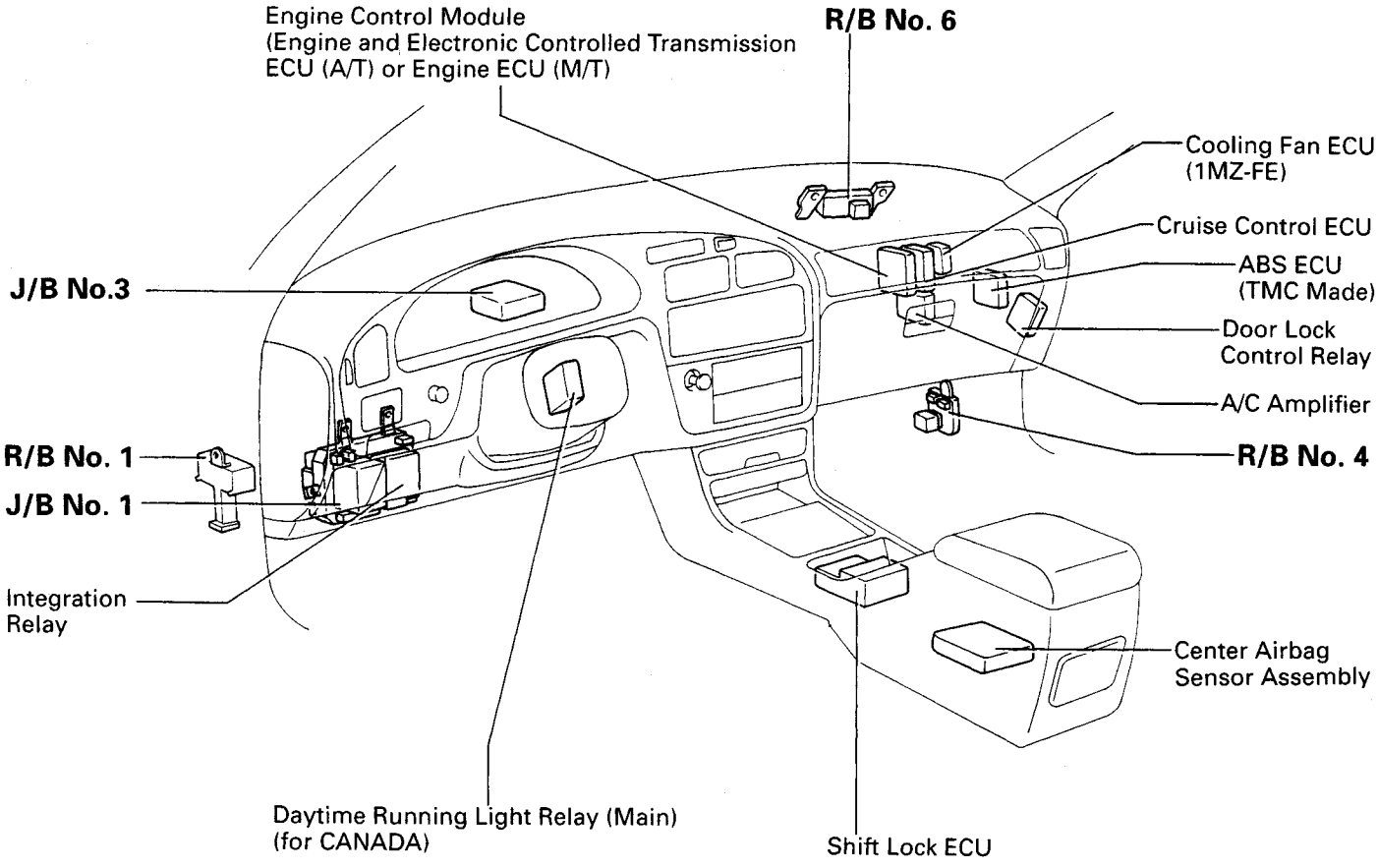

[Body]

[Sedan]

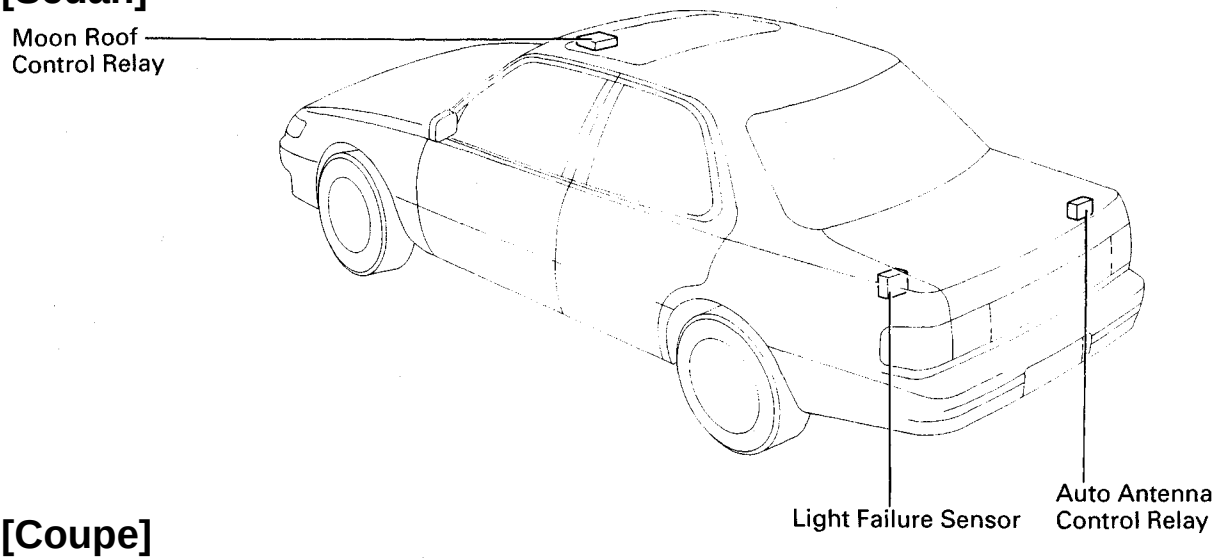

[Coupe]

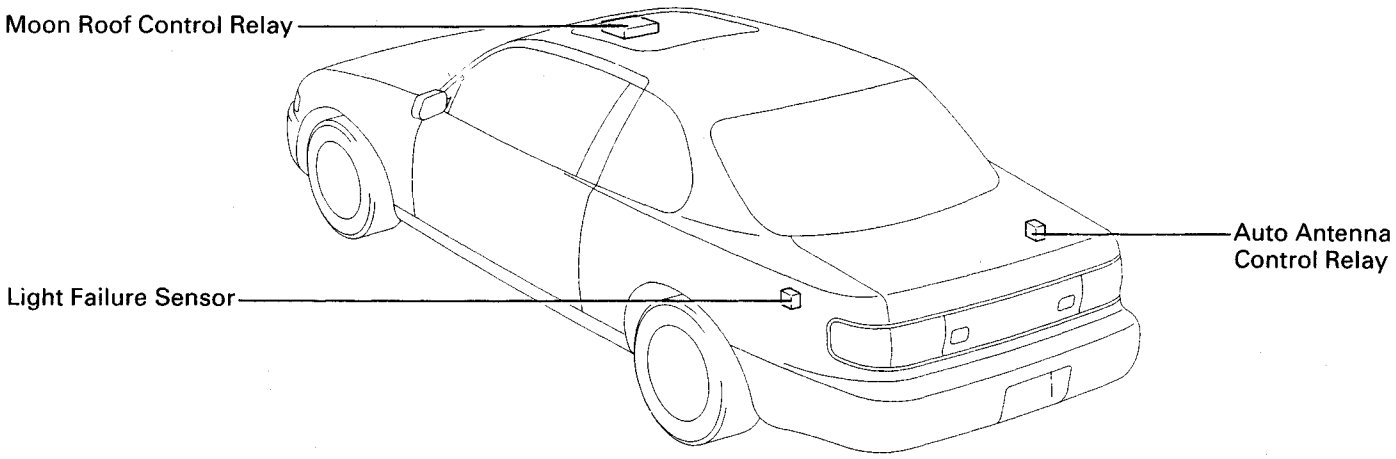

[Wagon]

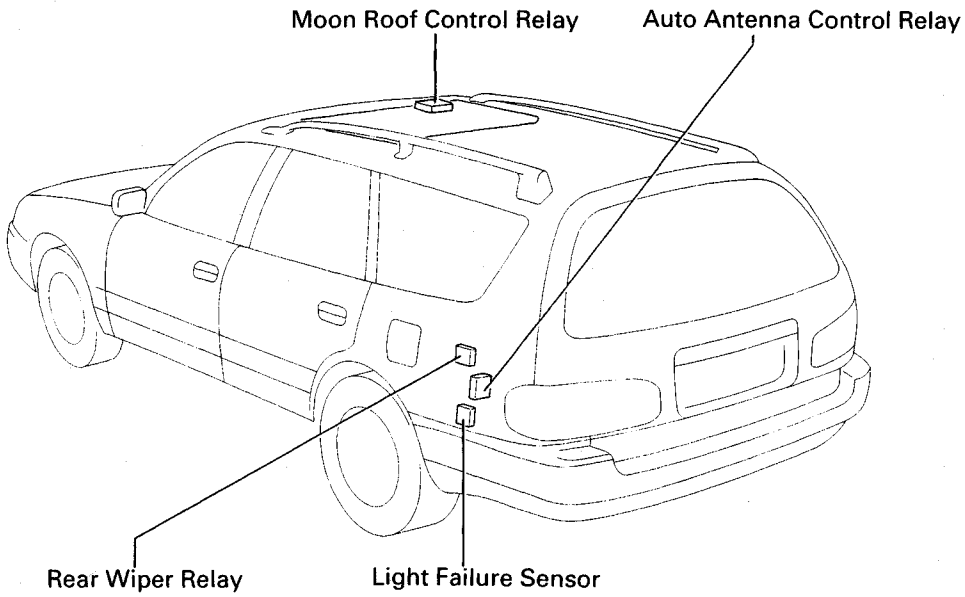

RELAY LOCATIONS

: J/B No. 1	Instrument Panel Left (See Page 18)

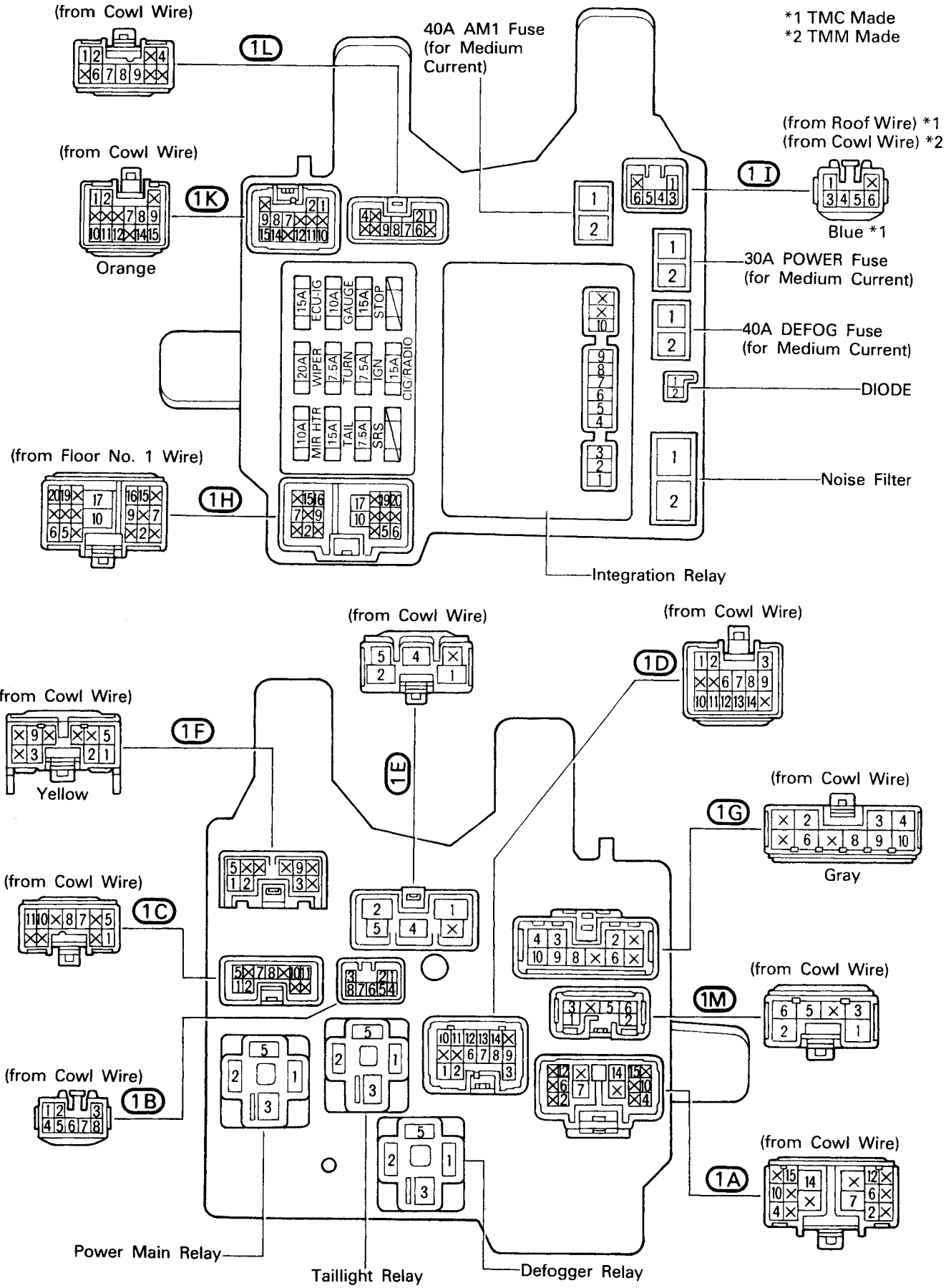

[J/B No. 1 Inner Circuit]

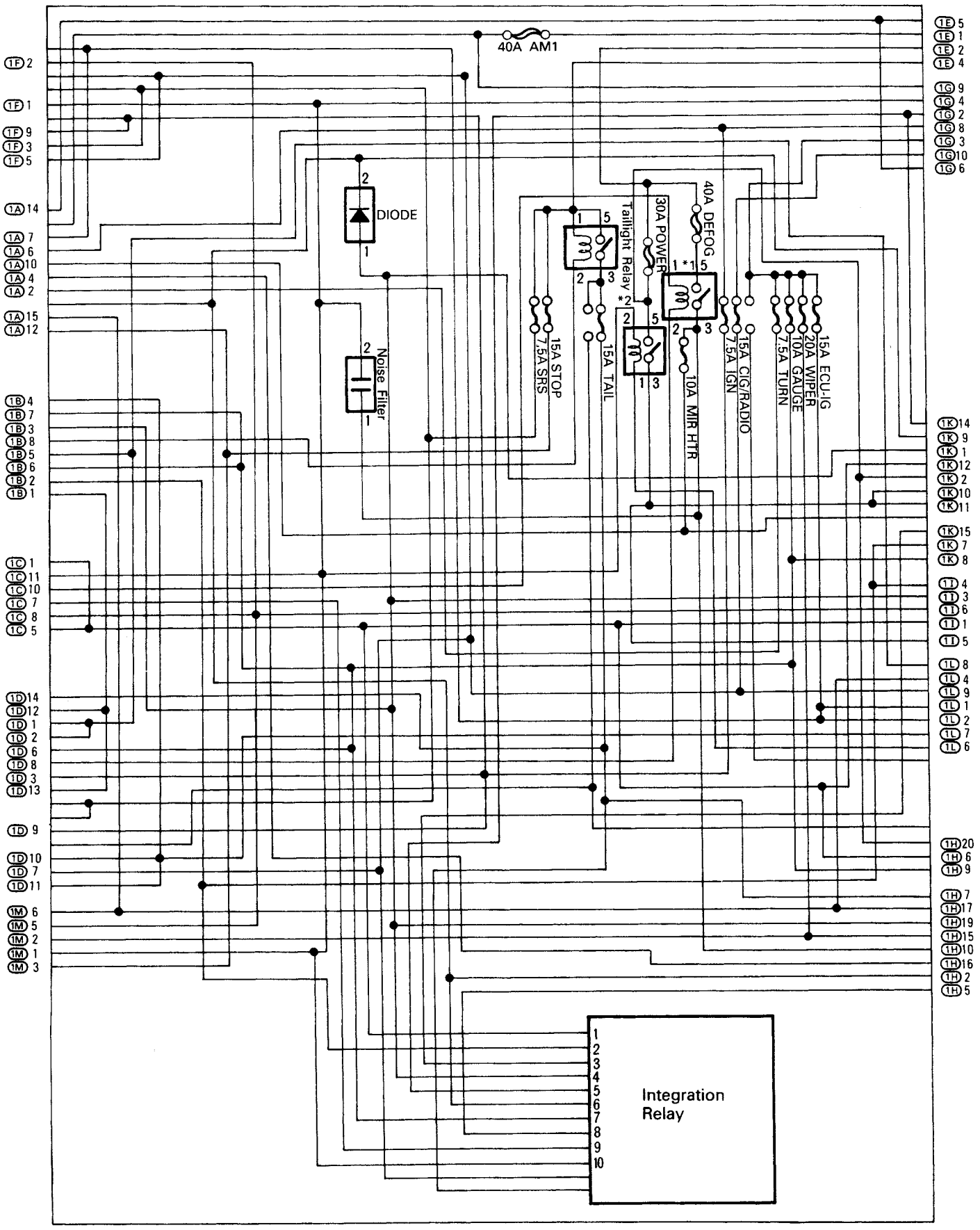

*1: Defogger Relay
*2: Power Main Relay

RELAY LOCATIONS

: J/B No. 2	Engine Compartment Left (See Page 18)

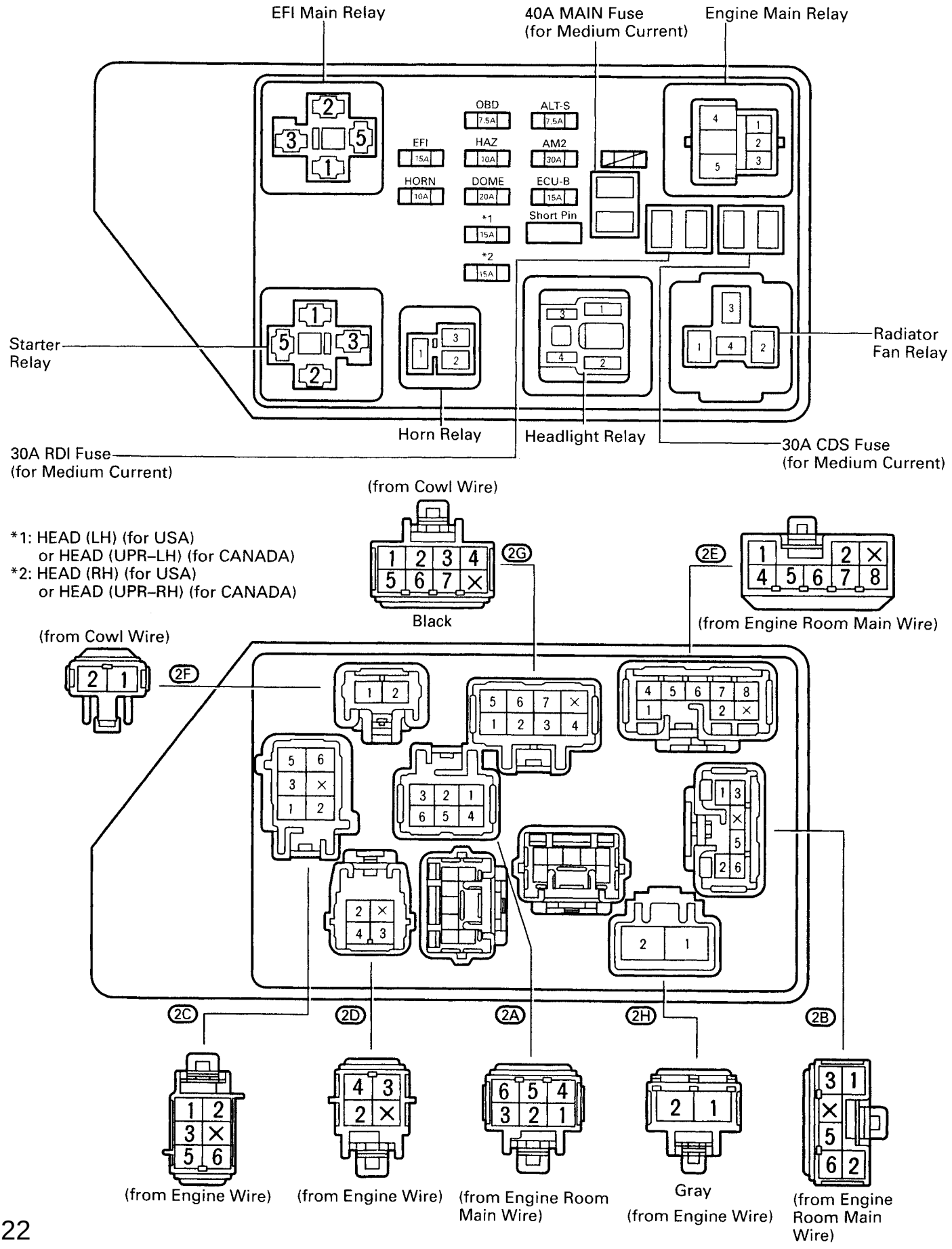

[J/B No. 2 Inner Circuit]

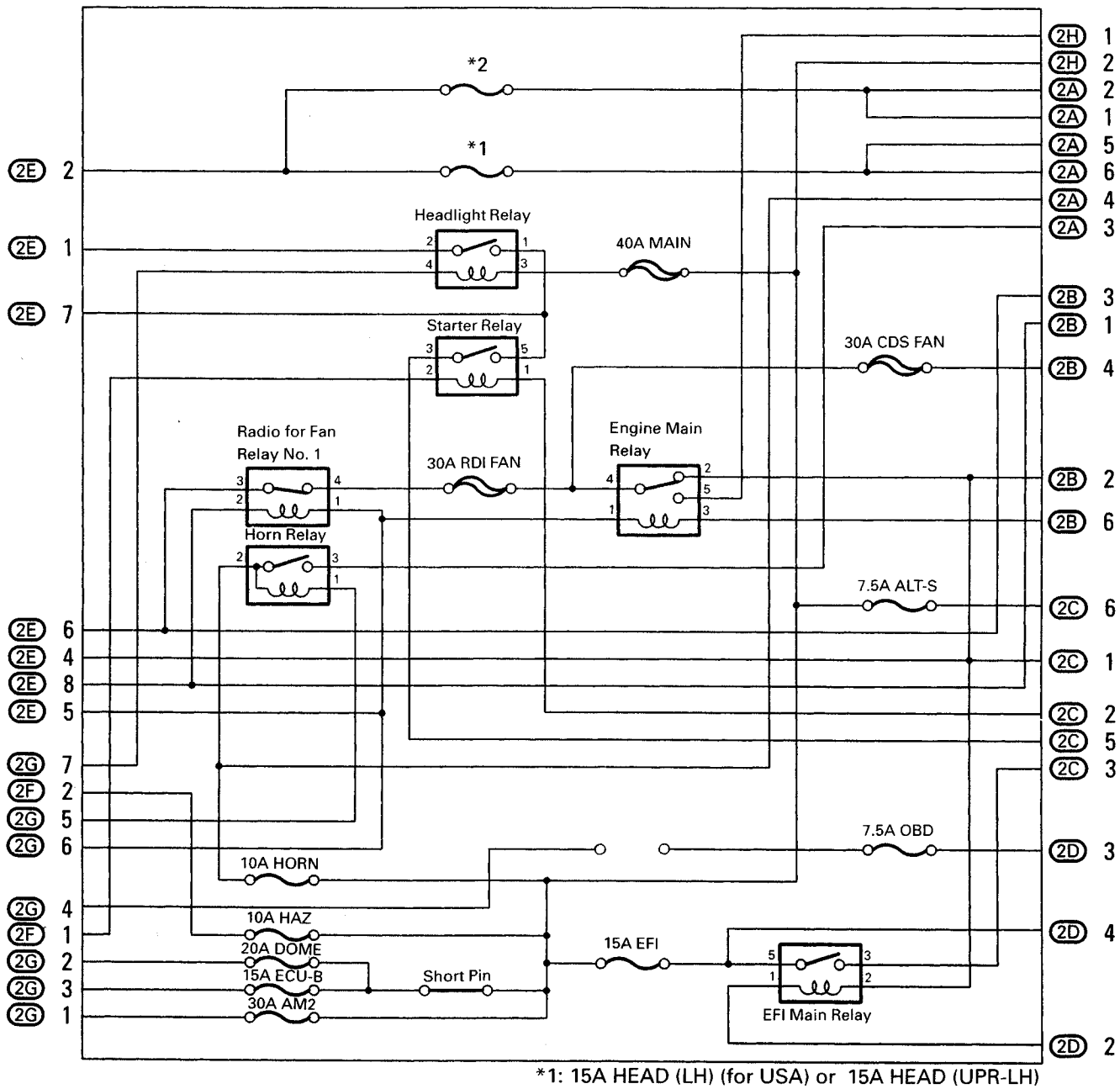

*1: 15A HEAD (LH) (for USA) or 15A HEAD (UPR-LH) (for CANADA)
*2: 15A HEAD (RH) (for USA) or 15A HEAD (UPR-RH) (for CANADA)

RELAY LOCATIONS

: J/B No. 3	Behind Combination Meter (See Page 18)

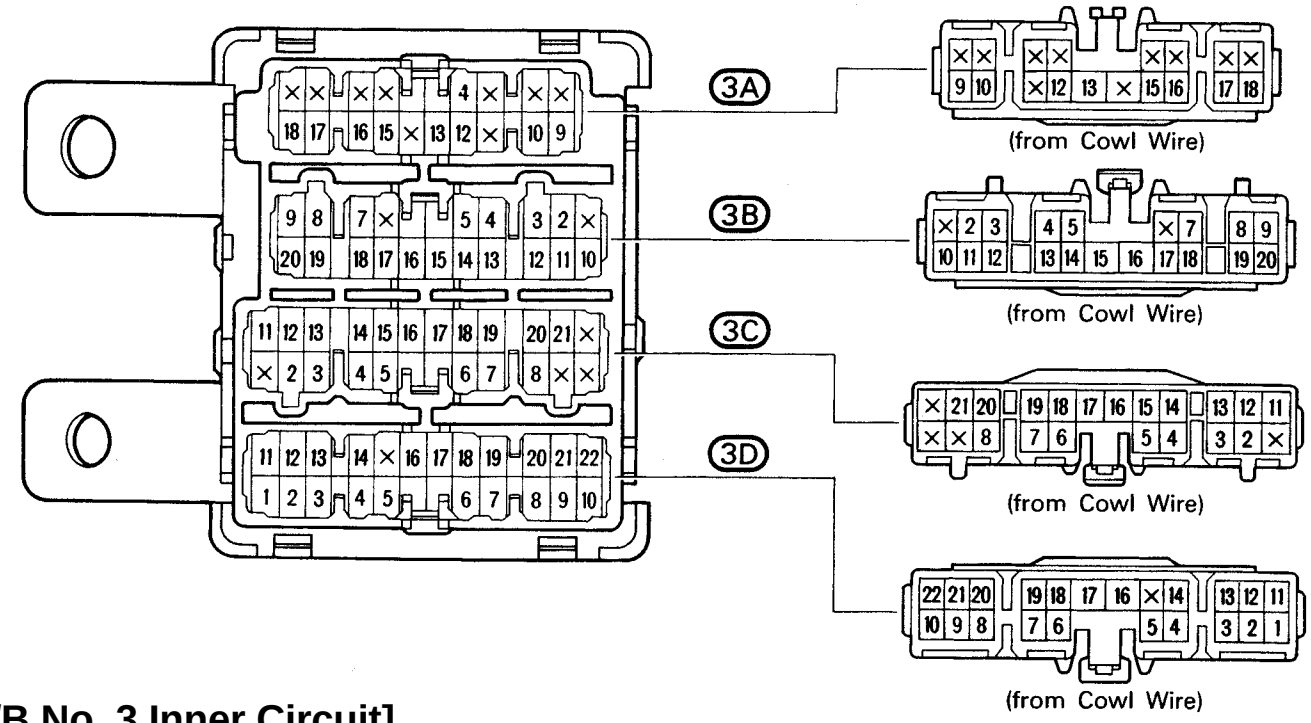

[J/B No. 3 Inner Circuit]

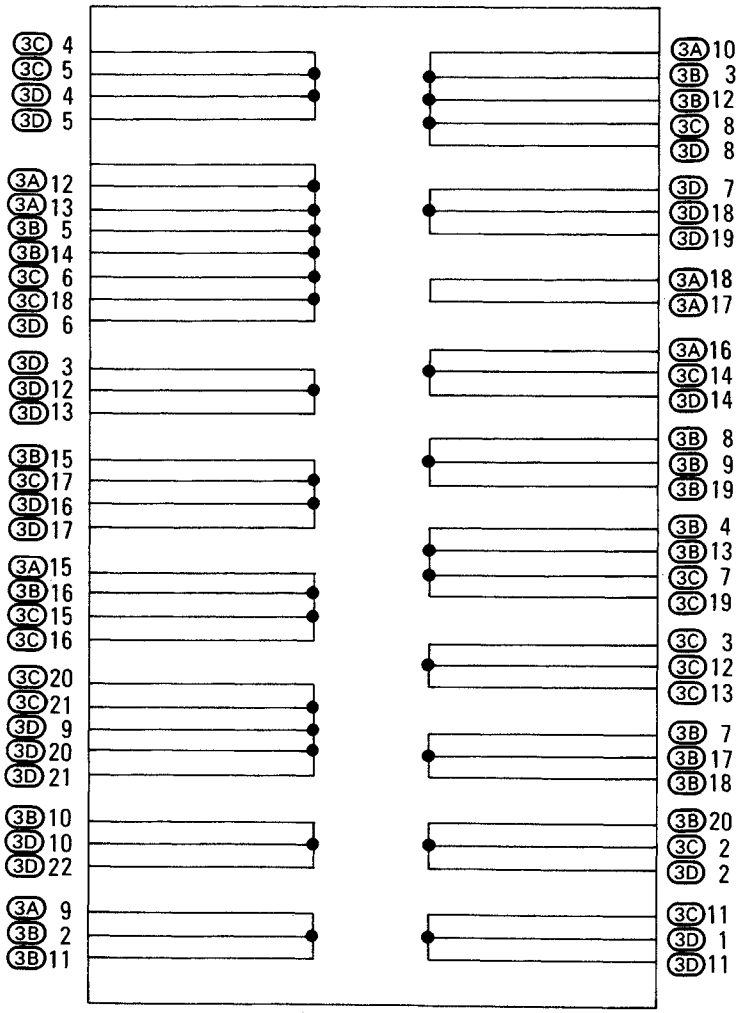

① : R/B No. 1	Left Kick Panel (See Page 18)

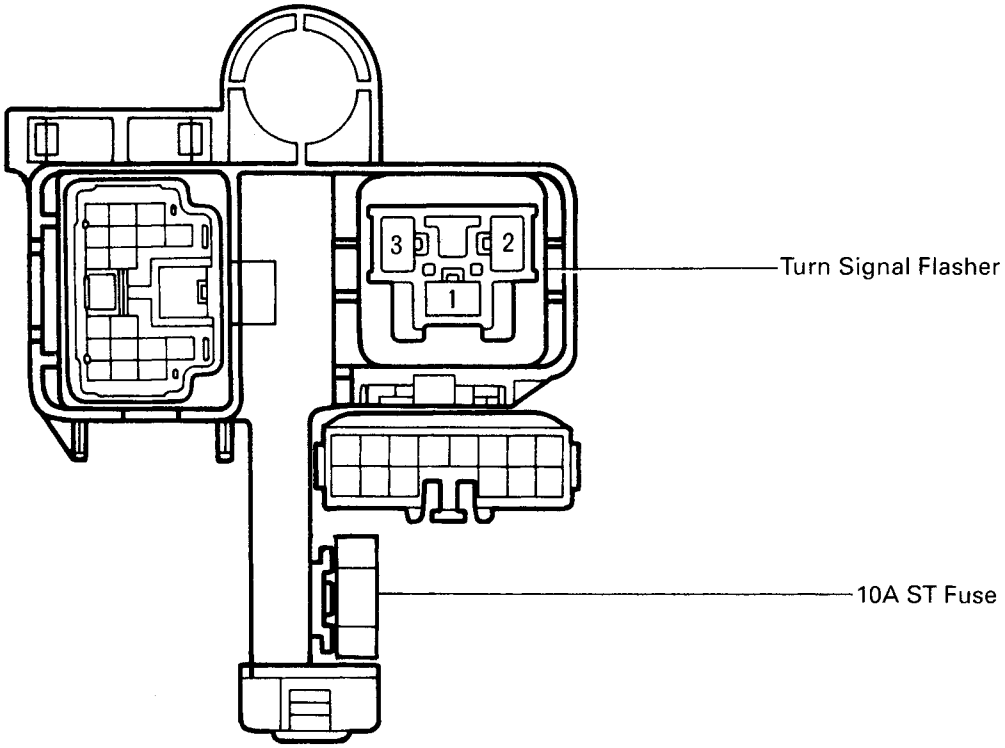

④ : R/B No. 4	Right Kick Panel (See Page 18)

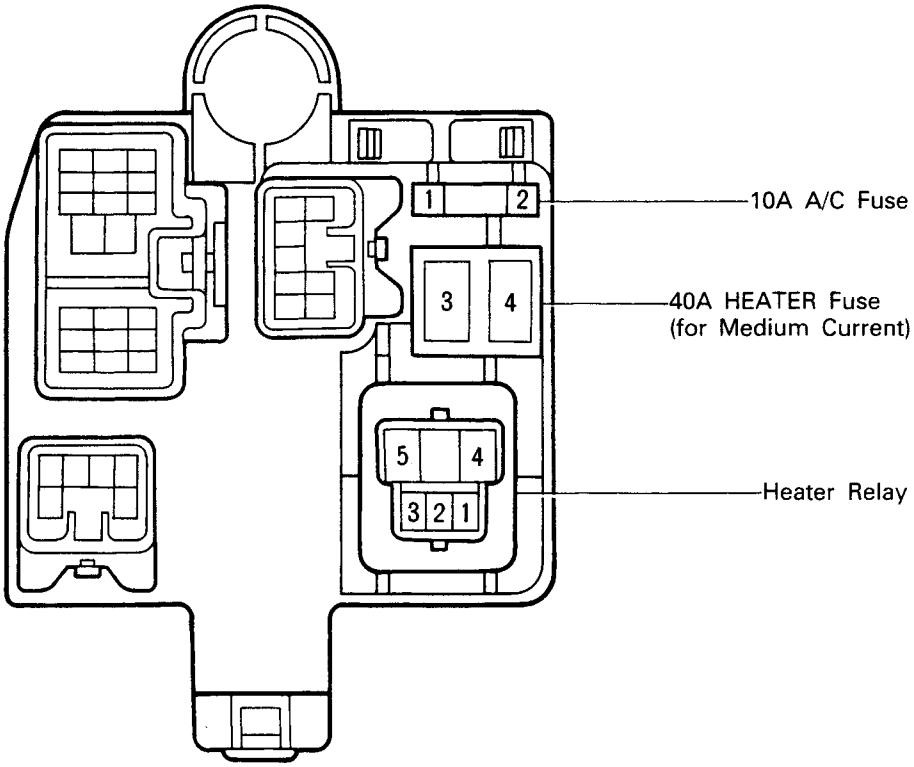

RELAY LOCATIONS

⑤ : R/B No. 5	Engine Compartment Left (See Page 18)

(for 1MZ–FE)

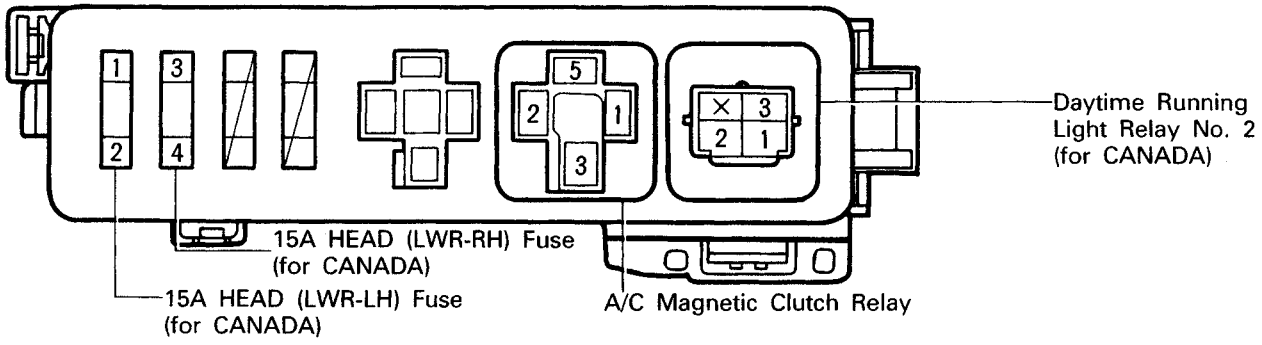

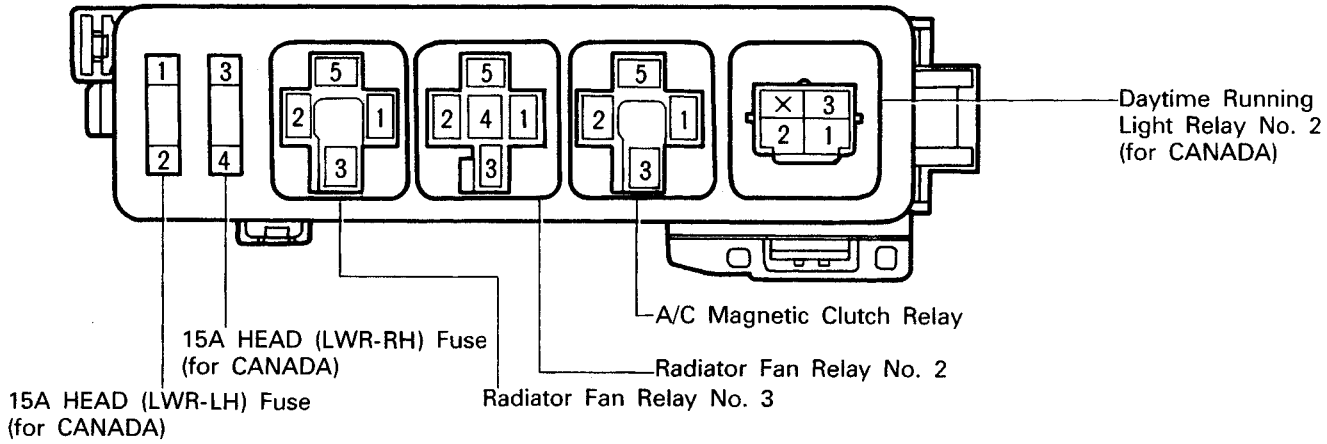

⑥ : J/B No. 6	Behind Glove Box (See Page 18)

(for 5S–FE)

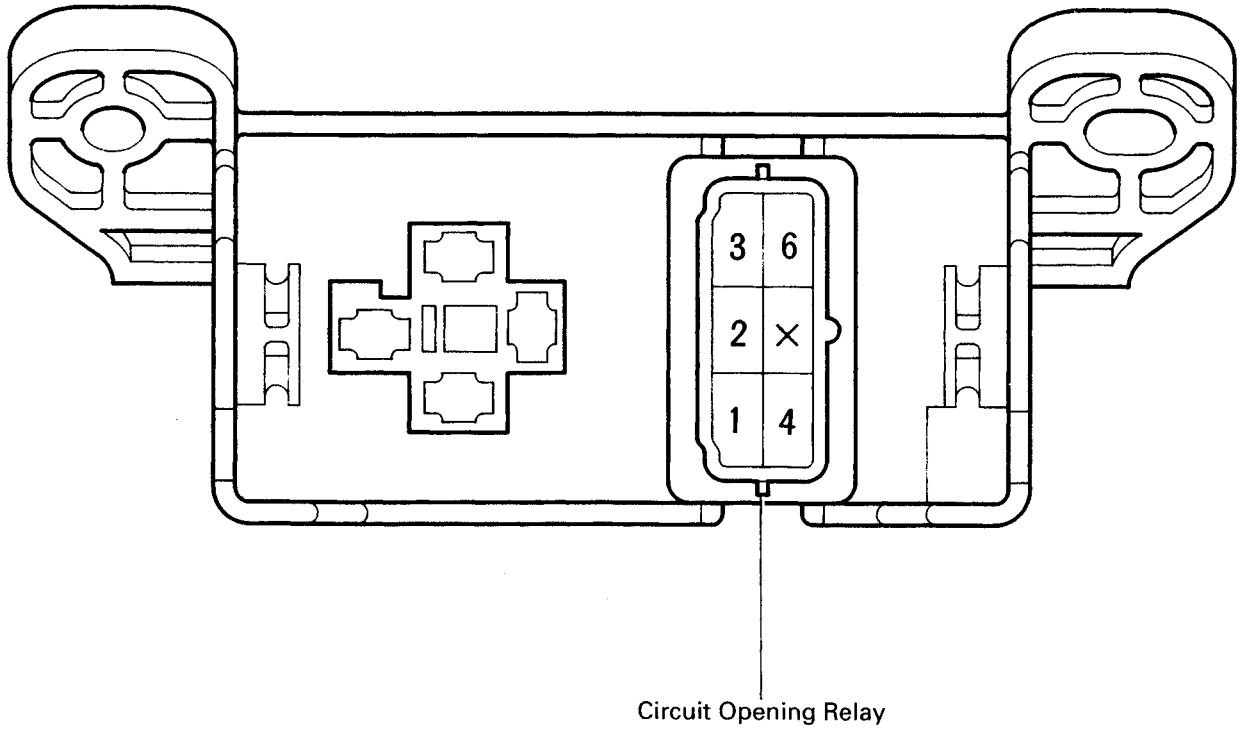

⑦ : R/B No. 7	Near The Battery (See Page 18)

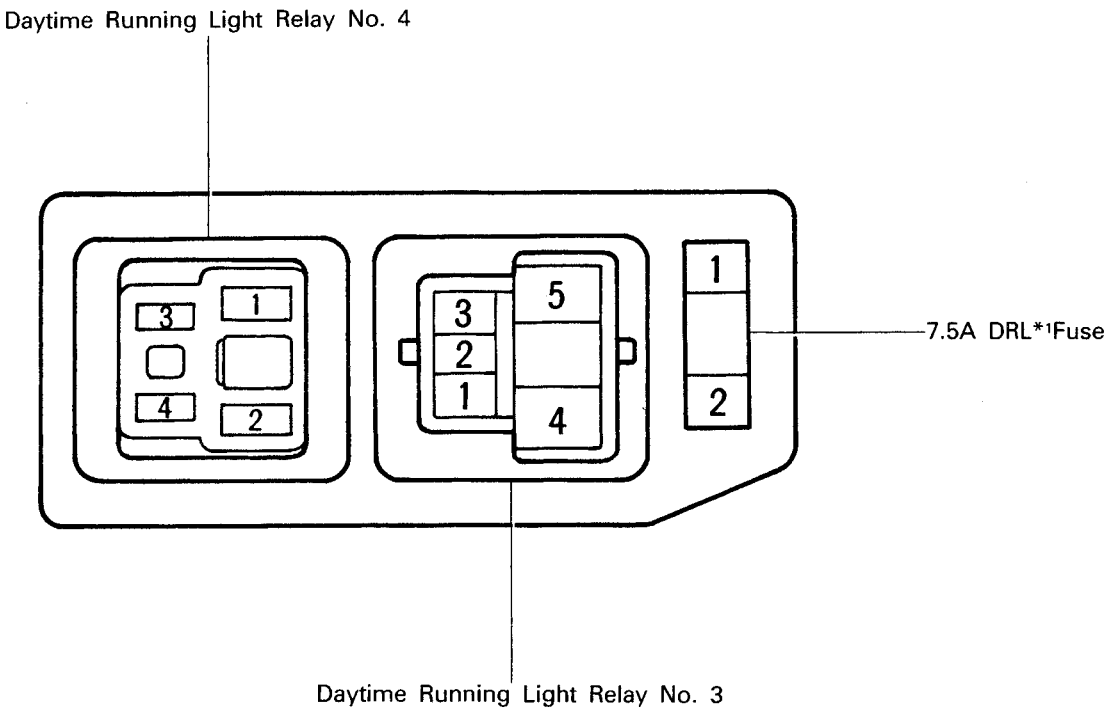

(*1: Daytime Running Light)

Position of Parts in Engine Compartment

[1MZ–FE]

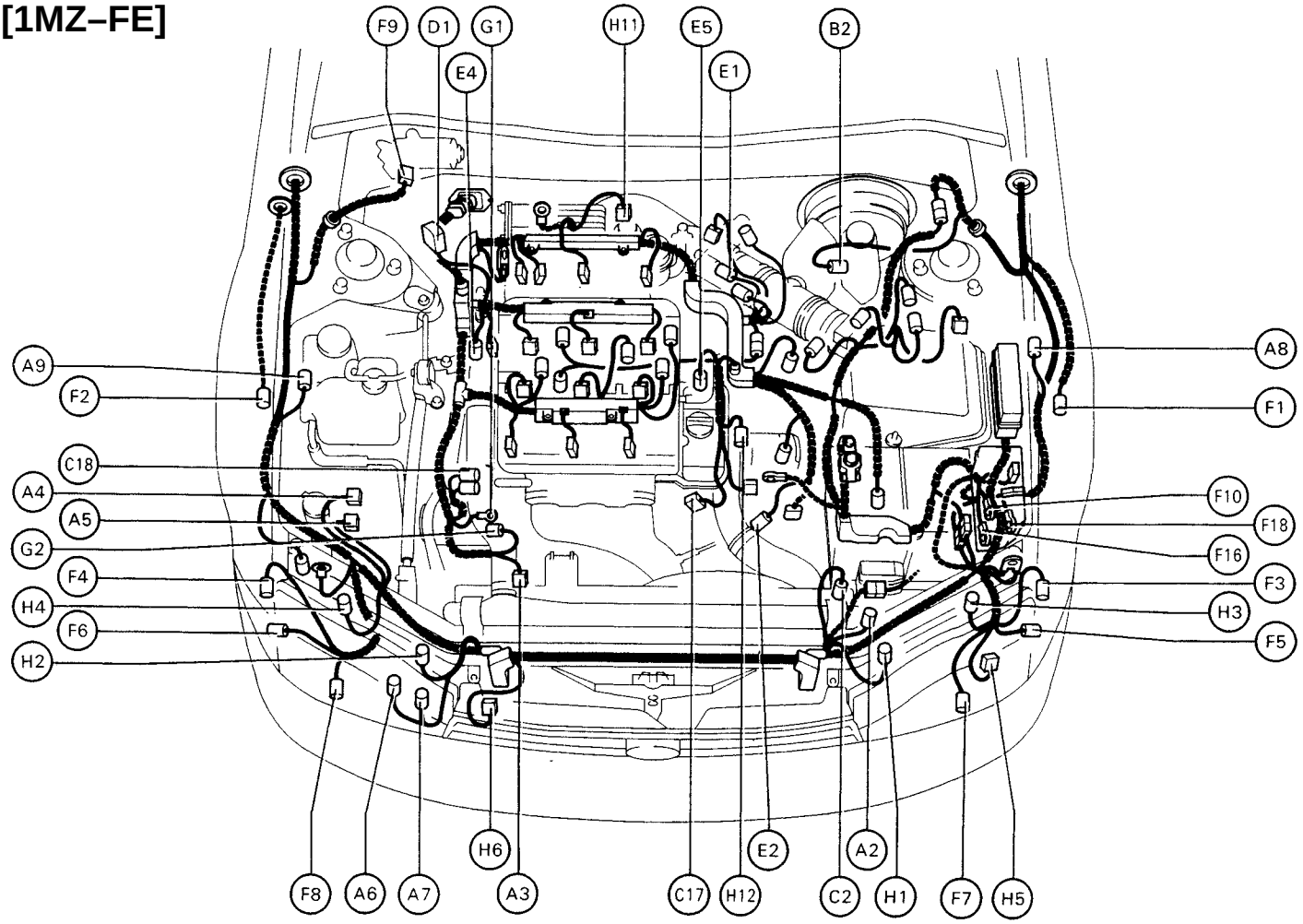

A 2 A/C Triple Pressure SW (A/C Dual and Single Pressure SW)
A 3 A/C Magnetic Clutch and Lock Sensor
A 4 ABS Actuator
A 5 ABS Actuator
A 6 ABS Relay
A 7 ABS Relay
A 8 ABS Speed Sensor Front LH
A 9 ABS Speed Sensor Front RH

B 2 Brake Fluid Level SW

C 2 Cruise Control Actuator
C 17 Camshaft Position Sensor
C 18 Crankshaft Position Sensor

D 1 Data Link Connector 1 (Check Connector)
D 2 Distributor

E 1 EGR Gas Temp. Sensor
E 2 Electronic Controlled Transmission Solenoid
E 4 Engine Coolant Temp. Sensor (EFI Water Temp. Sensor)
E 5 Engine Coolant Temp. Sensor (Water Temp. Sensor) (for Cooling Fan)

F 1 Front Airbag Sensor LH
F 2 Front Airbag Sensor RH
F 3 Front Clearance Light LH
F 4 Front Clearance Light RH
F 5 Front Side Marker LH
F 6 Front Side Marker RH
F 7 Front Turn Signal Light LH
F 8 Front Turn Signal Light RH
F 9 Front Wiper Motor
F 10 Fuse Box
F 16 Fuse Box
F 18 Fuse Box

G 1 Generator (Alternator)
G 2 Generator (Alternator)

H 1 Headlight Hi LH
H 2 Headlight Hi RH
H 3 Headlight Lo LH
H 4 Headlight Lo RH
H 5 Horn LH
H 6 Horn RH
H 11 Heated Oxygen Sensor (Bank 1 Sensor 1)
H 12 Heated Oxygen Sensor (Bank 2 Sensor 1)

Position of Parts in Engine Compartment

[1MZ–FE]

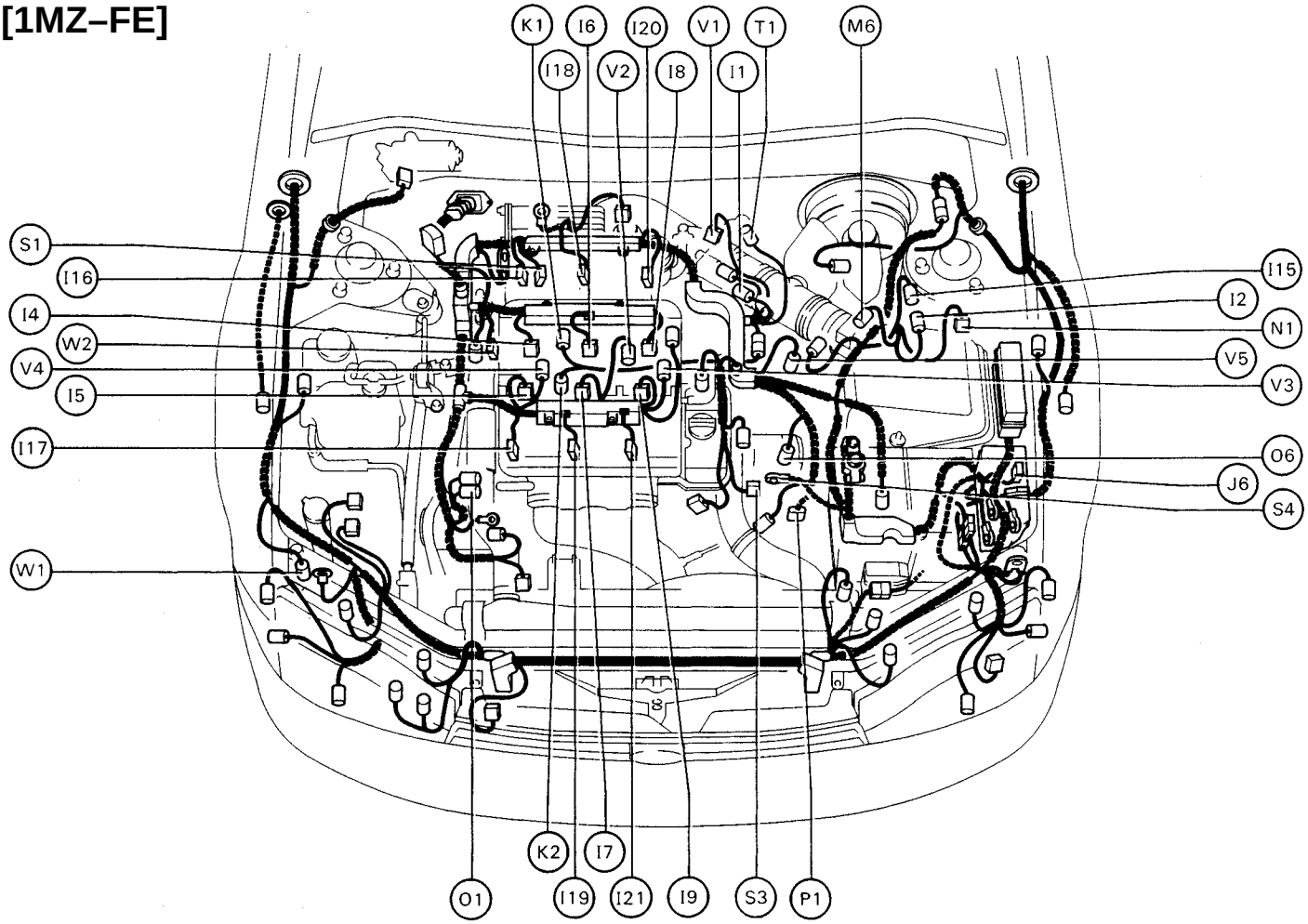

I 1 Idle Air Control Valve (ISC Valve)
I 2 Igniter
I 4 Injector No. 1
I 5 Injector No. 2
I 6 Injector No. 3
I 7 Injector No. 4
I 8 Injector No. 5
I 9 Injector No. 6
I 15 Igniter
I 16 Ignition Coil No. 1
I 17 Ignition Coil No. 2
I 18 Ignition Coil No. 3
I 19 Ignition Coil No. 4
I 20 Ignition Coil No. 5
I 21 Ignition Coil No. 6

J 6 Junction Connector

K 1 Knock Sensor 1
K 2 Knock Sensor 2

M 6 Mass Air Flow (Air Flow Meter)

N 1 Noise Filter (for Ignition System)

O 1 Oil Pressure SW
O 6 O/D Direct Clutch Speed Sensor

P 1 Park/Neutral Position SW (Neutral Start SW) (A/T)

S 1 Solenoid Valve (for Hydrauric Motor)
S 3 Starter
S 4 Starter

T 1 Throttle Position Sensor

V 1 VSV (for A/C Idle–Up)
V 2 VSV (for EGR System)
V 3 VSV (for Fuel Pressure Up)
V 4 VSV (for Intake Air Control)
V 5 Vehicle Speed Sensor (Speed Sensor)

W 1 Washer Motor
W 2 Water Temp. Sender

Position of Parts in Engine Compartment

[5S–FE]

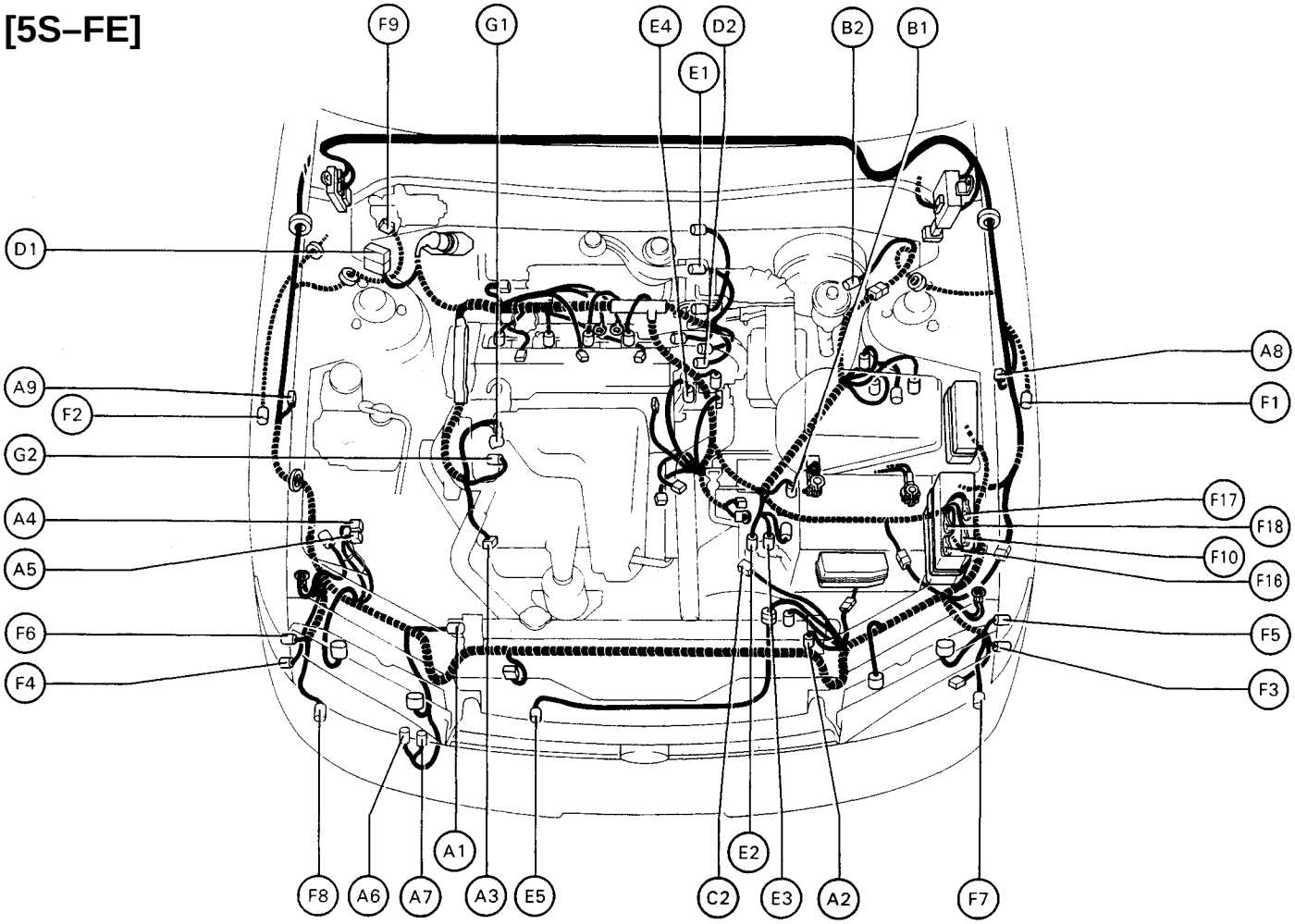

A 1 A/C Condenser Fan Motor
A 2 A/C Triple Pressure SW (A/C Dual and Single Pressure SW)
A 3 A/C Magnetic Clutch and Lock Sensor
A 4 ABS Actuator
A 5 ABS Actuator
A 6 ABS Relay
A 7 ABS Relay
A 8 ABS Speed Sensor Front LH
A 9 ABS Speed Sensor Front RH

B 1 Back–Up Light SW (M/T)
B 2 Brake Fluid Level SW

C 2 Cruise Control Actuator

D 1 Data Link Connector 1 (Check Connector)
D 2 Distributor

E 1 EGR Gas Temp. Sensor
E 2 Electronic Controlled Transmission Solenoid
E 3 Electronic Controlled Transmission Solenoid
E 4 Engine Coolant Temp. Sensor (EFI Water Temp. Sensor)
E 5 Water Temp. SW (for Cooling Fan)

F 1 Front Airbag Sensor LH
F 2 Front Airbag Sensor RH
F 3 Front Clearance Light LH
F 4 Front Clearance Light RH
F 5 Front Side Marker LH
F 6 Front Side Marker RH
F 7 Front Turn Signal Light LH
F 8 Front Turn Signal Light RH
F 9 Front Wiper Motor
F 10 Fuse Box
F 16 Fuse Box
F 17 Fuse Box
F 18 Fuse Box

G 1 Generator (Alternator)
G 2 Generator (Alternator)

Position of Parts in Engine Compartment

[5S–FE]

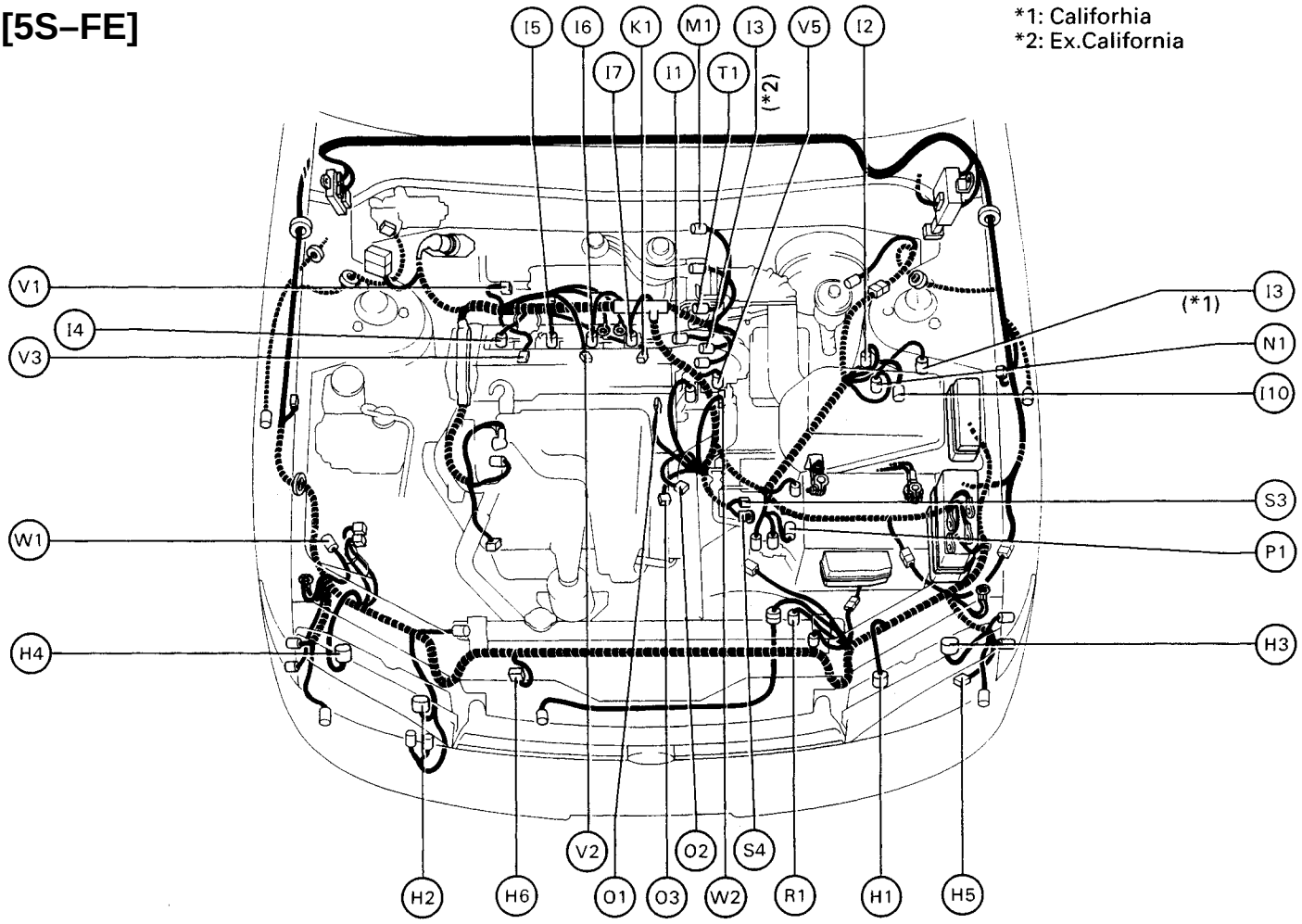

H 1 Headlight Hi LH
H 2 Headlight Hi RH
H 3 Headlight Lo LH
H 4 Headlight Lo RH
H 5 Horn LH
H 6 Horn RH

I 1 Idle Air Control Valve (ISC Valve)
I 2 Igniter
I 3 Ignition Coil
I 4 Injector No. 1
I 5 Injector No. 2
I 6 Injector No. 3
I 7 Injector No. 4
I 10 Intake Air Temp. Sensor (In–Air Temp. Sensor)

K 1 Knock Sensor

M 1 Manifold Absolute Pressure Sensor (Vacuum Sensor)

N 1 Noise Filter (for Ignition System)

O 1 Oil Pressure SW
O 2 Oxygen Sensor (Sub)
O 3 Oxygen Sensor (Main)

P 1 Park/Neutral Position SW (Neutral Start SW) (A/T)

R 1 Radiator Fan Motor

S 3 Starter
S 4 Starter

T 1 Throttle Position Sensor

V 1 VSV (for A/C Idle–Up)
V 2 VSV (for EGR System)
V 3 VSV (for Fuel Pressure Up)
V 5 Vehicle Speed Sensor (Speed Sensor)

W 1 Washer Motor
W 2 Water Temp. Sender

Position of Parts in Instrument Panel

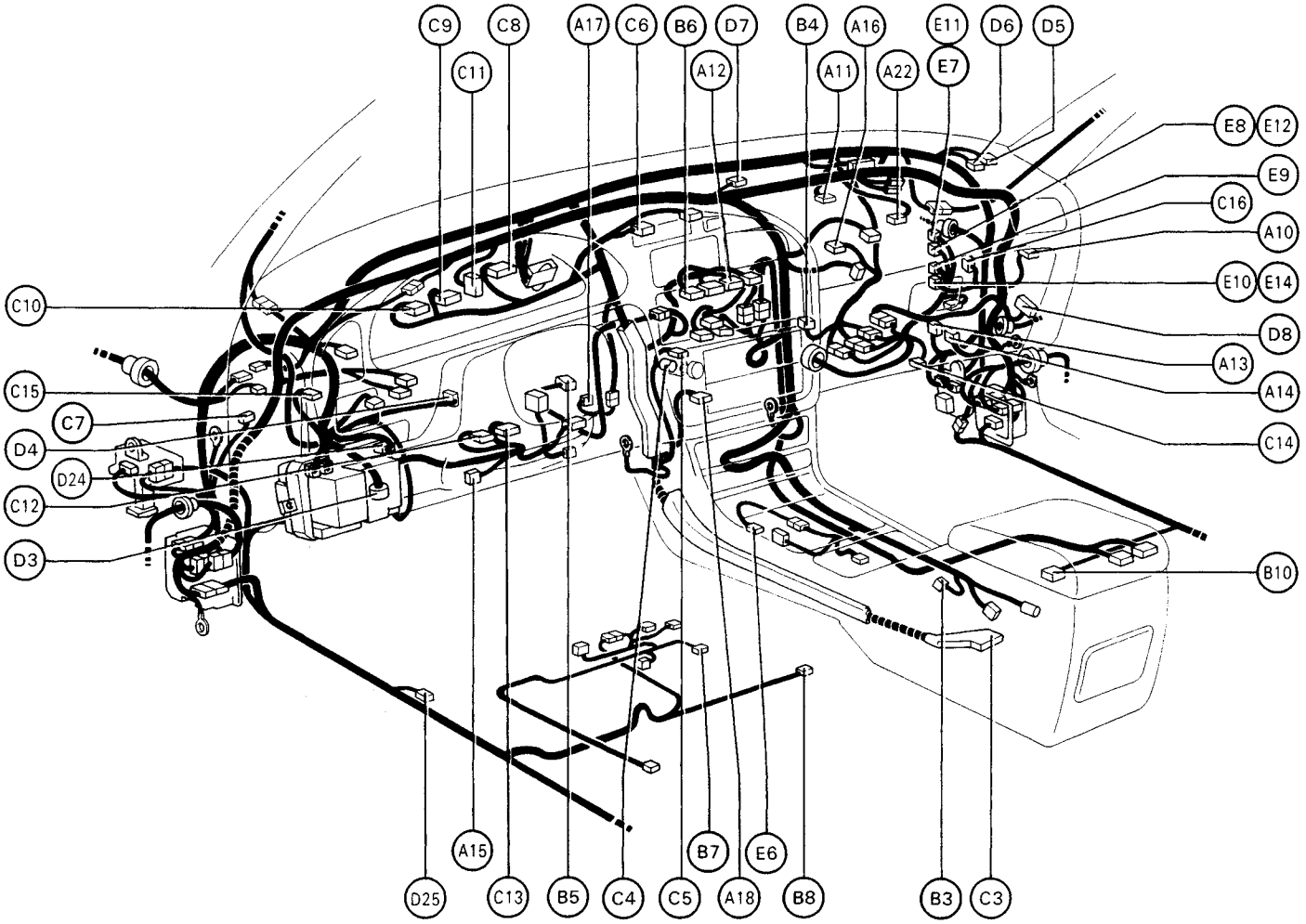

A 10 A/C Amplifier
A 11 A/C Evaporator Temp. Sensor
A 12 A/C SW
A 13 ABS ECU
A 14 ABS ECU
A 15 Airbag Squib (Steering Wheel Pad)
A 16 Air Inlet Control Servo Motor
A 17 Air Vent Mode Control Servo Motor
A 18 Ashtray Illumination
A 22 Airbag Squib (Front Passenger Airbag Assembly)

B 3 Back Door Lock Control SW
B 4 Blower Motor
B 5 Blower Resistor
B 6 Blower SW
B 7 Buckle SW LH (w/ Power Seat)
B 8 Buckle SW LH (w/o Power Seat)
B 10 Buckle SW RH

C 3 Center Airbag Sensor Assembly
C 4 Cigarette Lighter
C 5 Cigarette Lighter Illumination
C 6 Clock
C 7 Clutch Start SW (M/T)
C 8 Combination Meter
C 9 Combination Meter
C 10 Combination Meter
C 11 Combination Meter
C 12 Combination SW
C 13 Combination SW
C 14 Cooling Fan ECU
C 15 Cruise Control Clutch SW (M/T)
C 16 Cruise Control ECU

D 3 Data Lik Connector 2 (TDCL (Toyota Diagnostic Communication Link))
D 4 Daytime Running Light Relay (Main)
D 5 Diode (for Cruise Control)
D 6 Diode (for Idle–Up)
D 7 Diode (for Courtesy)
D 8 Door Lock Control Relay)
D 24 Date Link Connector 3
D 25 Diode (for Tension Reducer)

E 6 Electronic Controlled Transmission Pattern Select SW
E 7 Engine Control Module (Engine and Electronic Controlled Transmission ECU) (A/T)
E 8 Engine Control Module (Engine and Electronic Controlled Transmission ECU) (A/T)
E 9 Engine Control Module (Engine and Electronic Controlled Transmission ECU) (A/T)
E 10 Engine Control Module (Engine and Electronic Controlled Transmission ECU) (A/T)
E 11 Engine Control Module (Engine ECU) (M/T)
E 12 Engine Control Module (Engine ECU) (M/T)
E 14 Engine Control Module (Engine ECU) (M/T)

Position of Parts in Instrument Panel

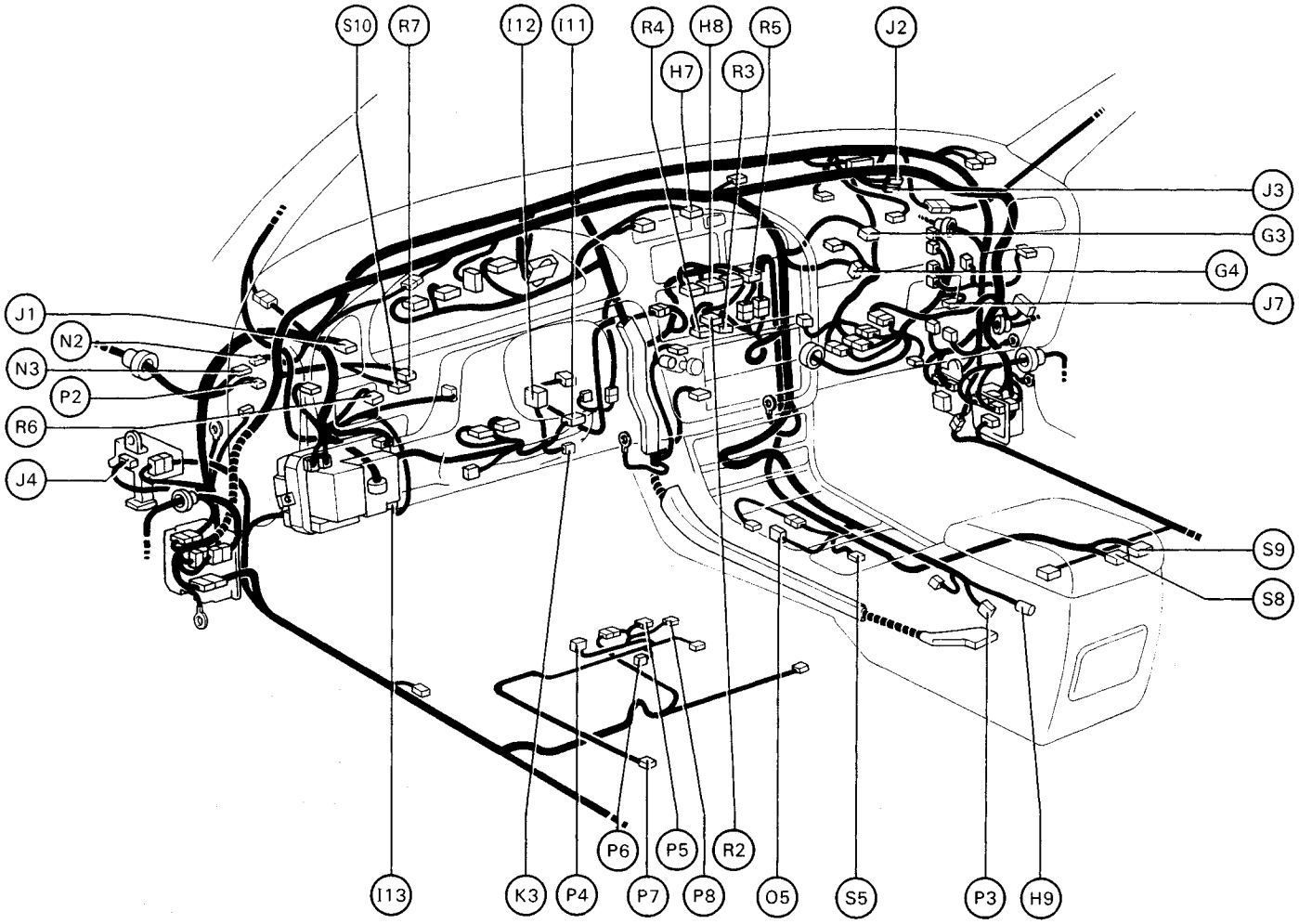

G 3 Glove Box Light
G 4 Glove Box Light SW

H 7 Hazard SW
H 8 Heater Control SW (for Push Control SW Type) or Air Vent Mode Control SW (for Lever Control SW Type)
H 9 Heated Oxygen Sensor (Bank 1 Sensor 2)

I 11 Ignition Key Cylinder Light
I 12 Ignition SW and Unlock Warning SW
I 13 Integration Relay

J 1 Junction Connector
J 2 Junction Connector
J 3 Junction Connector
J 4 Junction Connector (for SRS System)
J 7 Junction Connector

K 3 Key Interlock Solenoid

N 2 Noise Filter (for Stop Light)
N 3 Noise Filter (for Stop Light)

O 5 O/D Main SW and A/T Indicator Light (Shift Lever)

P 2 Parking Brake SW (for 1MZ–FE)
P 3 Parking Brake SW (for 5S–FE)
P 4 Power Seat Control SW
P 5 Power Seat Motor (for Front Vertical Control)
P 6 Power Seat Motor (for Rear Vertical Control)
P 7 Power Seat Motor (for Reclining Control)
P 8 Power Seat Motor (for Slide Control)

R 2 Radio and Player (w/ CD Player)
R 3 Radio and Player (w/o CD Player)
R 4 Radio and Player (w/o CD Player)
R 5 Rear Window Defogger SW
R 6 Remote Control Mirror SW
R 7 Rheostat

S 5 Shift Lock ECU
S 8 Stereo Component Amplifier
S 9 Stereo Component Amplifier
S 10 Stop Light SW

Position of Parts in Body

[Sedan]

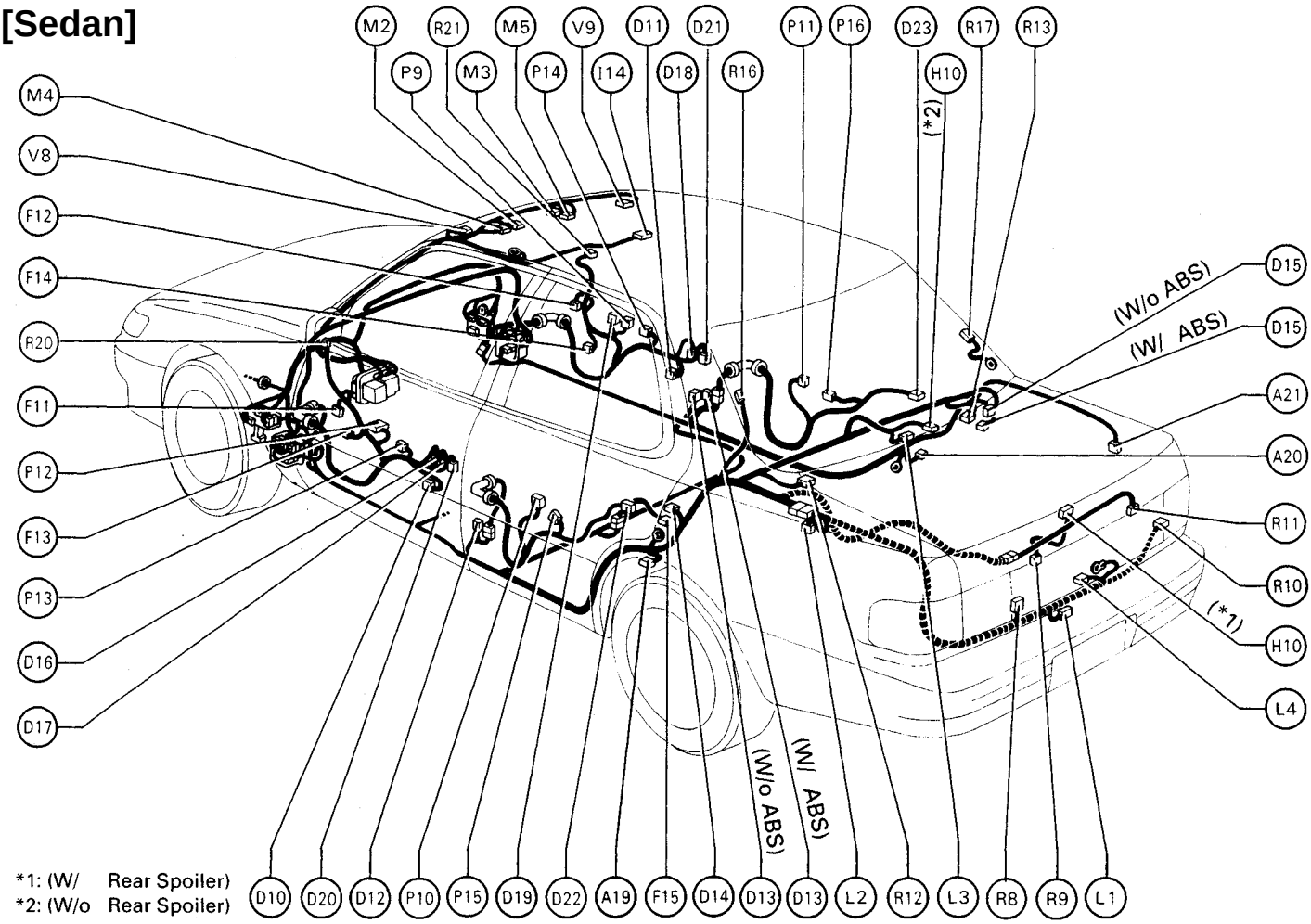

*1: (W/ Rear Spoiler)
*2: (W/o Rear Spoiler)

A 19 ABS Speed Sensor Rear LH
A 20 ABS Speed Sensor Rear RH
A 21 Auto Antenna Motor and Relay

D 10 Door Courtesy Light Front LH
D 11 Door Courtesy Light Front RH
D 12 Door Courtesy SW Front LH
D 13 Door Courtesy SW Front RH
D 14 Door Courtesy SW Rear LH
D 15 Door Courtesy SW Rear RH
D 16 Door Key Cylinder Light and SW
D 17 Door Key Lock and Unlock SW LH
D 18 Door Key Lock and Unlock SW RH
D 19 Door Lock Control SW RH
D 20 Door Lock Motor and Door Unlock Detection SW Front LH
D 21 Door Lock Motor and Door Unlock Detection SW Front RH
D 22 Door Lock Motor Rear LH
D 23 Door Lock Motor Rear RH

F 11 Front Door Speaker LH
F 12 Front Door Speaker RH
F 13 Front Tweeter (Speaker) LH
F 14 Front Tweeter (Speaker) RH
F 15 Fuel Pump and Sender

H 10 High Mount Stop Light

I 14 Interior Light

L 1 License Plate Light
L 2 Light Failure Sensor
L 3 Luggage Compartment Light
L 4 Luggage Compartment Light SW

M 2 Moon Roof Control Relay
M 3 Moon Roof Control SW and Personal Light (w/ Moon Roof)
M 4 Moon Roof Limit SW
M 5 Moon Roof Motor

P 9 Power Window Control SW Front RH
P 10 Power Window Control SW Rear LH
P 11 Power Window Control SW Rear RH
P 12 Power Window Master SW and Door Lock Control SW LH
P 13 Power Window Motor Front LH
P 14 Power Window Motor Front RH
P 15 Power Window Motor Rear LH
P 16 Power Window Motor Rear RH

R 8 Rear Combination Light LH
R 9 Rear Combination Light LH
R 10 Rear Combination Light RH
R 11 Rear Combination Light RH
R 12 Rear Speaker LH
R 13 Rear Speaker RH
R 16 Rear Window Defogger (+)
R 17 Rear Window Defogger (–)
R 20 Remote Control Mirror LH
R 21 Remote Control Mirror RH

V 8 Vanity Light LH
V 9 Vanity Light RH

Position of Parts in Body

[Coupe]

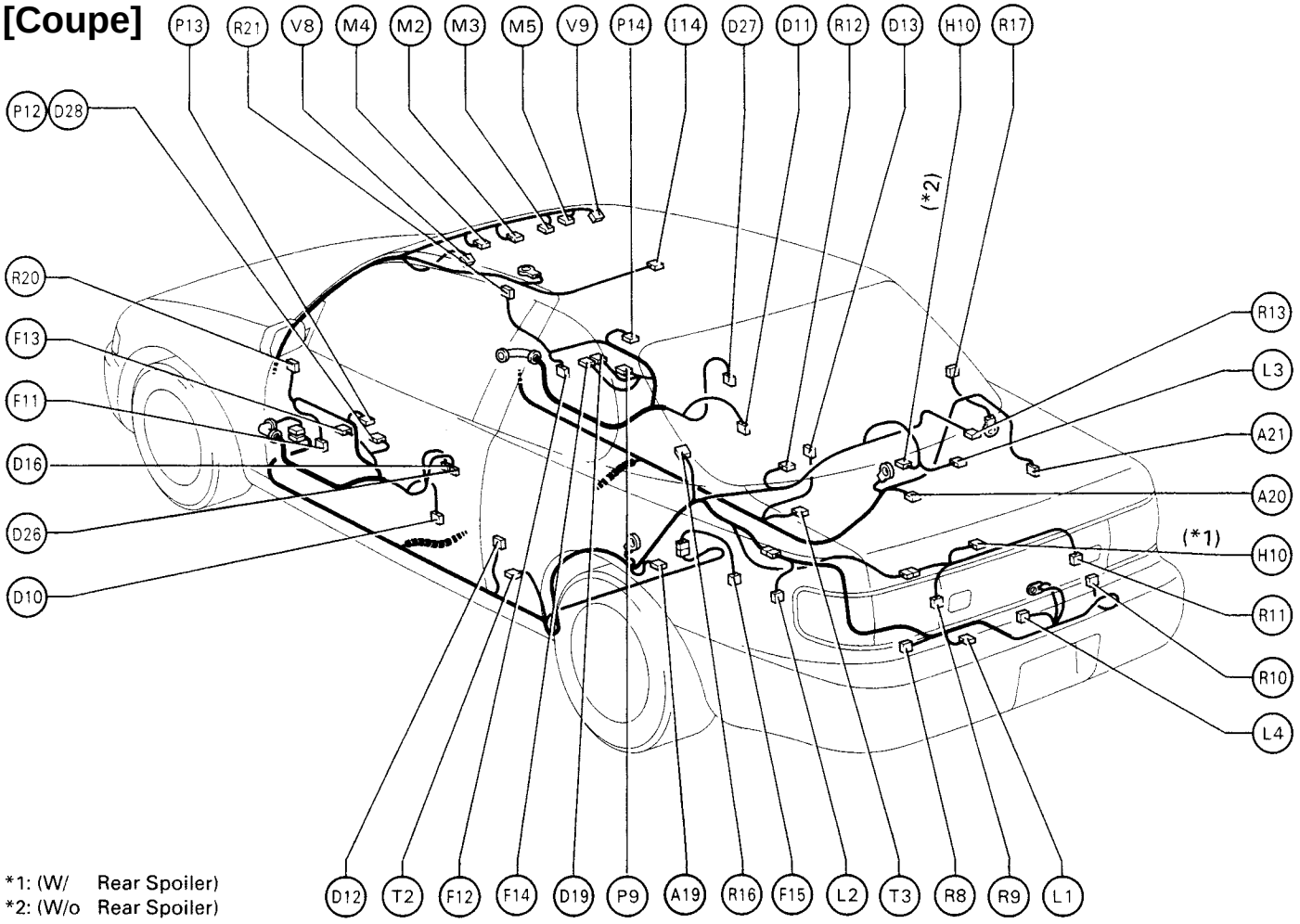

*1: (W/ Rear Spoiler)
*2: (W/o Rear Spoiler)

A 19 ABS Speed Sensor Rear LH
A 20 ABS Speed Sensor Rear RH
A 21 Auto Antenna Motor and Relay

D 10 Door Courtesy Light Front LH
D 11 Door Courtesy Light Front RH
D 12 Door Courtesy SW Front LH
D 13 Door Courtesy SW Front RH
D 16 Door Key Cylinder Light and SW
D 19 Door Lock Control SW RH
D 26 Door Lock Motor, Door Unlock Detection SW Door Key Lock and Unlock SW LH
D 27 Door Lock Motor, Door Unlock Detection SW Door Key Lock and Unlock SW RH
D 28 Door Lock Control SW LH (w/o Power Window)

F 11 Front Door Speaker LH
F 12 Front Door Speaker RH
F 13 Front Tweeter (Speaker) LH
F 14 Front Tweeter (Speaker) RH
F 15 Fuel Pump and Sender

H 10 High Mount Stop Light

I 14 Interior Light

L 1 License Plate Light
L 2 Light Failure Sensor
L 3 Luggage Compartment Light
L 4 Luggage Compartment Light SW

M 2 Moon Roof Control Relay
M 3 Moon Roof Control SW and Personal Light (w/ Moon Roof)
M 4 Moon Roof Limit SW
M 5 Moon Roof Motor

P 9 Power Window Control SW Front RH
P 12 Power Window Master SW and Door Lock Control SW LH
P 13 Power Window Motor Front LH
P 14 Power Window Motor Front RH

R 8 Rear Combination Light LH
R 9 Rear Combination Light LH
R 10 Rear Combination Light RH
R 11 Rear Combination Light RH
R 12 Rear Speaker LH
R 13 Rear Speaker RH
R 16 Rear Window Defogger (+)
R 17 Rear Window Defogger (–)
R 20 Remote Control Mirror LH
R 21 Remote Control Mirror RH

T 2 Tension Reducer Solenoid LH
T 3 Tension Reducer Solenoid RH

V 8 Vanity Light LH
V 9 Vanity Light RH

Position of Parts in Body

[Wagon]

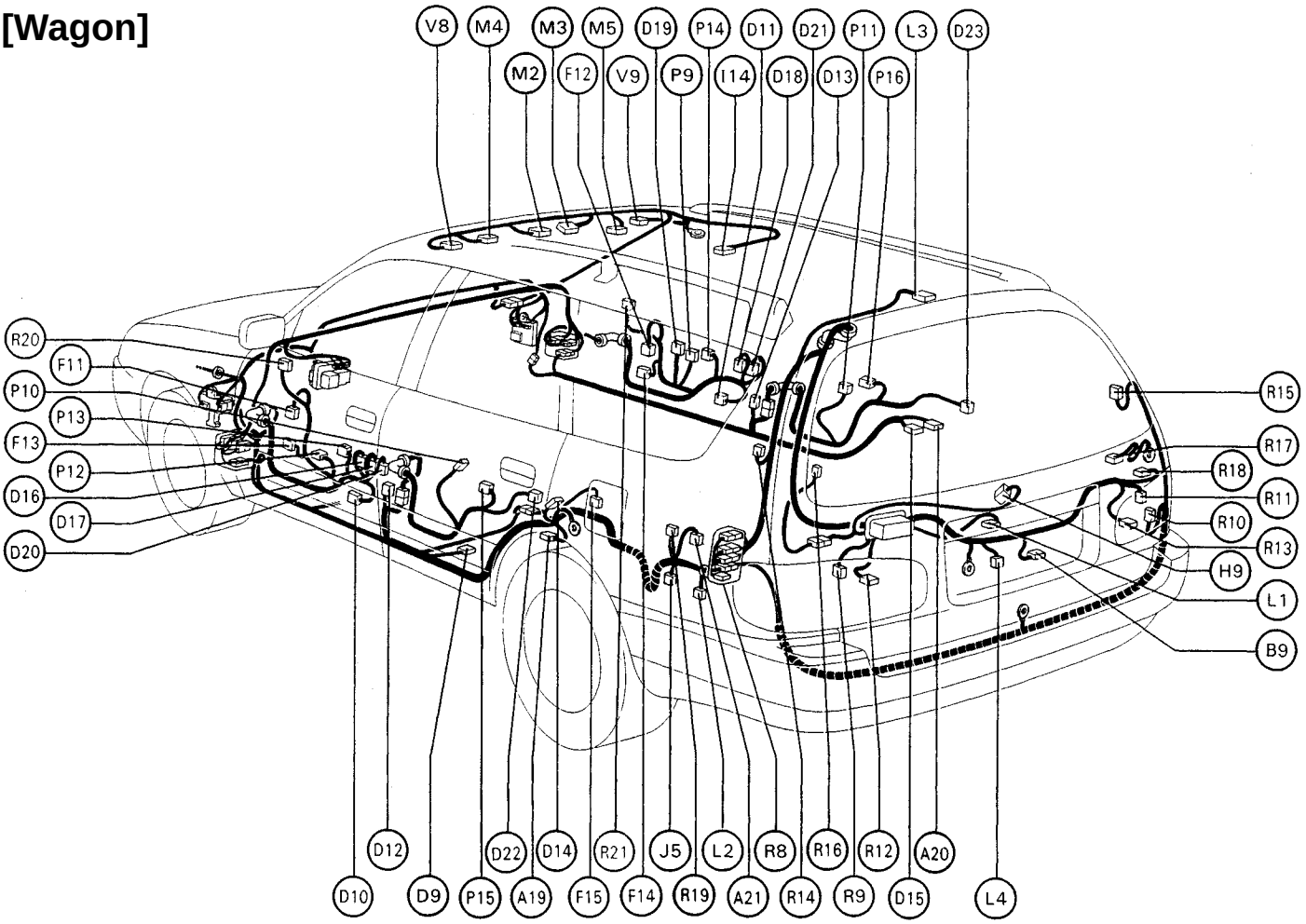

A 19 ABS Speed Sensor Rear LH
A 20 ABS Speed Sensor Rear RH
A 21 Auto Antenna Motor and Relay

D 10 Door Courtesy Light Front LH
D 11 Door Courtesy Light Front RH
D 12 Door Courtesy SW Front LH
D 13 Door Courtesy SW Front RH
D 14 Door Courtesy SW Rear LH
D 15 Door Courtesy SW Rear RH
D 16 Door Key Cylinder Light and SW
D 17 Door Key Lock and Unlock SW LH
D 18 Door Key Lock and Unlock SW RH
D 19 Door Lock Control SW RH
D 20 Door Lock Motor and Door Unlock Detection SW Front LH
D 21 Door Lock Motor and Door Unlock Detection SW Front RH
D 22 Door Lock Motor Rear LH
D 23 Door Lock Motor Rear RH

F 11 Front Door Speaker LH
F 12 Front Door Speaker RH
F 13 Front Tweeter (Speaker) LH
F 14 Front Tweeter (Speaker) RH
F 15 Fuel Pump and Sender

H 10 High Mount Stop Light

I 14 Interior Light

L 1 License Plate Light
L 2 Light Failure Sensor
L 3 Luggage Compartment Light
L 4 Luggage Compartment Light SW

M 2 Moon Roof Control Relay
M 3 Moon Roof Control SW and Personal Light (w/ Moon Roof)
M 4 Moon Roof Limit SW
M 5 Moon Roof Motor

P 9 Power Window Control SW Front RH
P 10 Power Window Control SW Rear LH
P 11 Power Window Control SW Rear RH
P 12 Power Window Master SW and Door Lock Control SW LH
P 13 Power Window Motor Front LH
P 14 Power Window Motor Front RH
P 15 Power Window Motor Rear LH
P 16 Power Window Motor Rear RH

R 8 Rear Combination Light LH
R 9 Rear Combination Light LH
R 10 Rear Combination Light RH
R 11 Rear Combination Light RH
R 12 Rear Speaker LH
R 13 Rear Speaker RH
R 16 Rear Window Defogger (+)
R 17 Rear Window Defogger (–)
R 20 Remote Control Mirror LH
R 21 Remote Control Mirror RH

V 8 Vanity Light LH
V 9 Vanity Light RH

ELECTRICAL WIRING DIAGRAM

-Memo

▭ : Location of Connector Joining Wire Harness and Wire Harness

▽ : Location of Ground Points

[1MZ–FE]

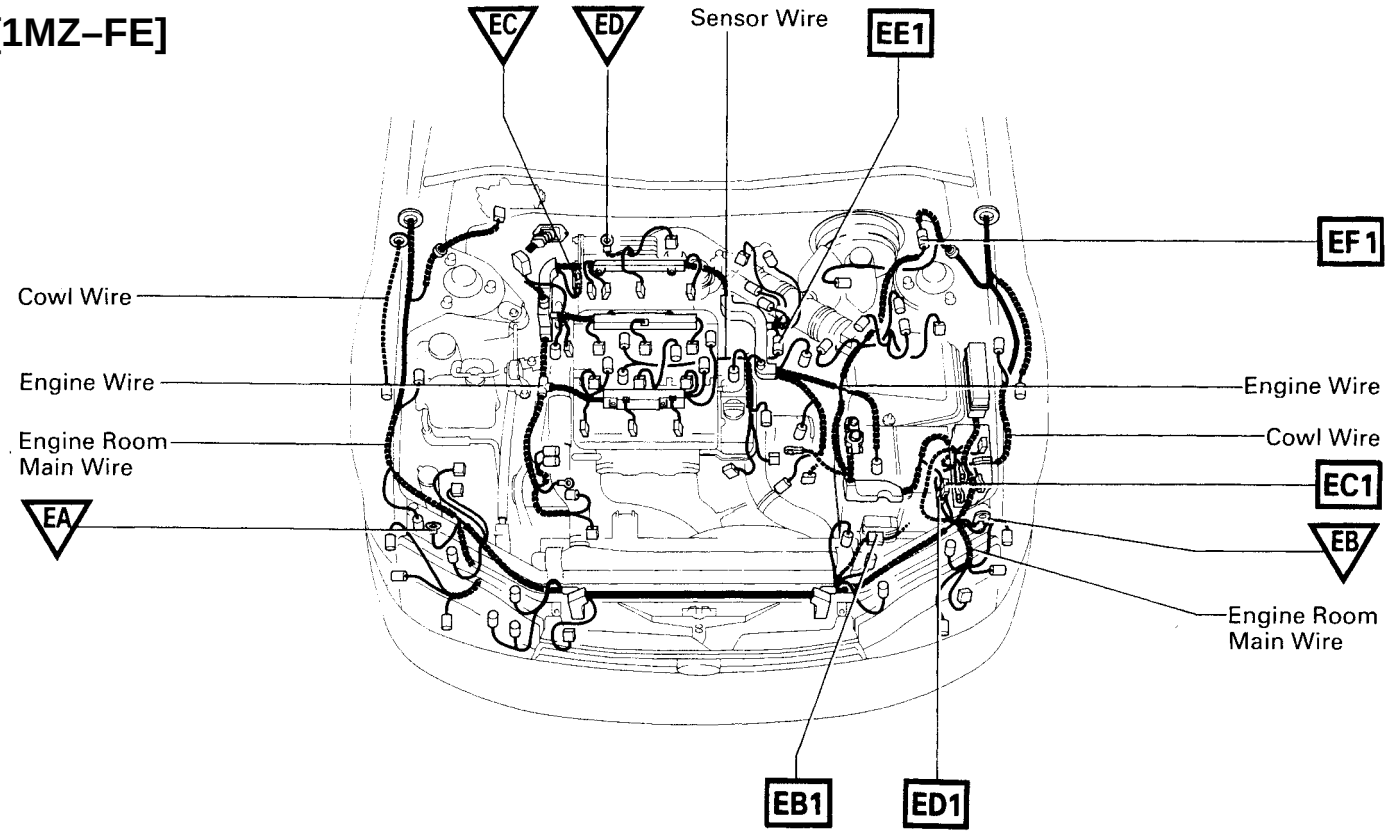

○ : Location of Splice Points

[1MZ–FE]

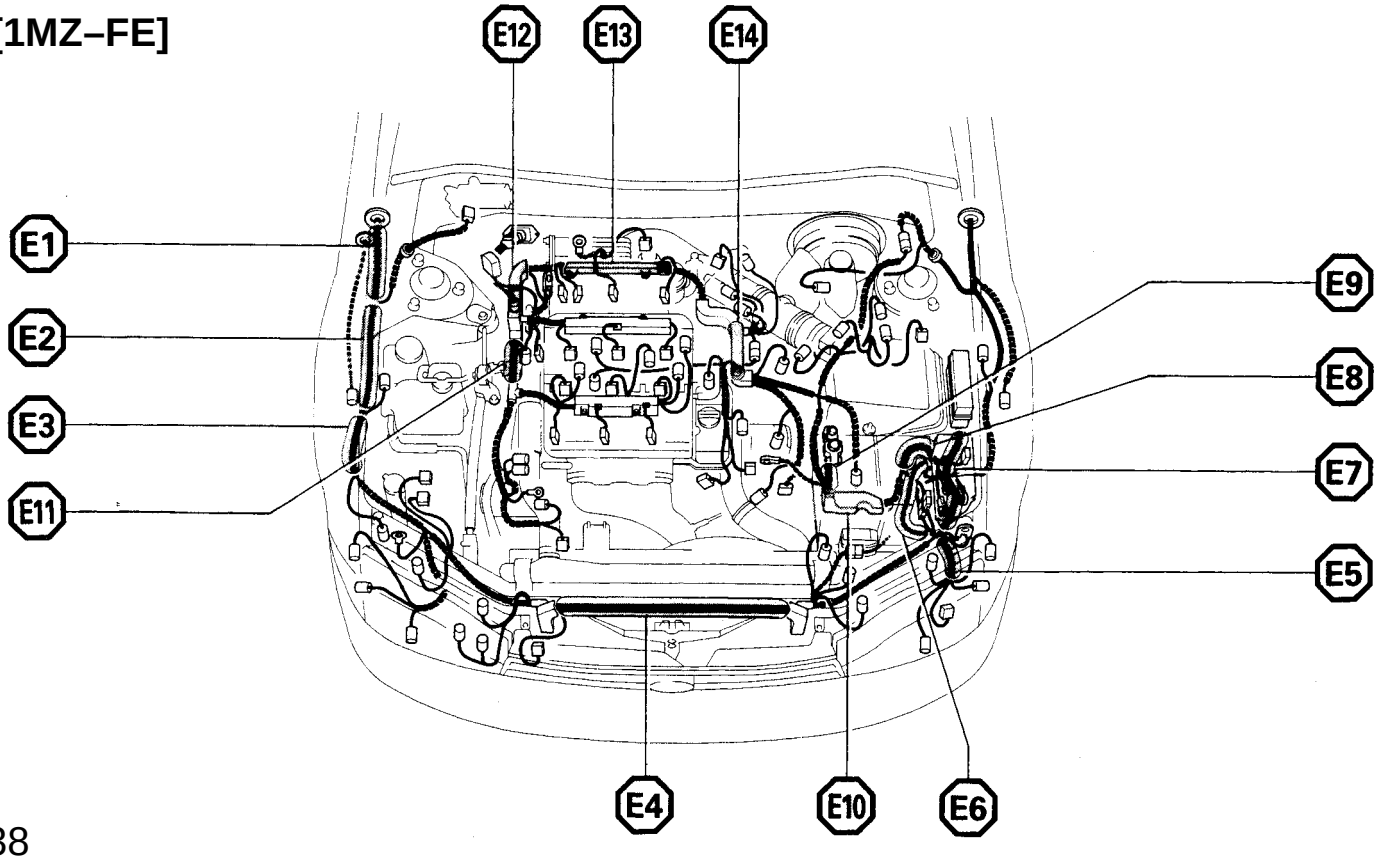

Connector Joining Wire Harness and Wire Harness

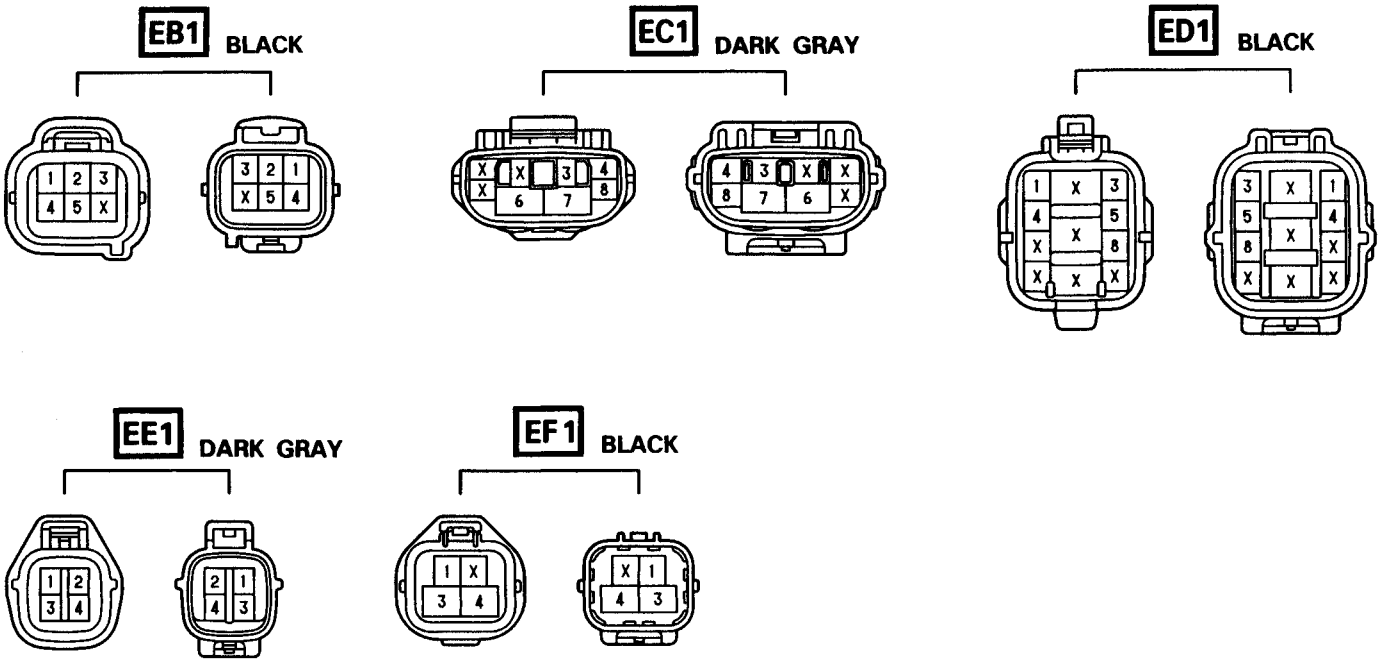

CODE	JOINING WIRE HARNESS AND WIRE HARNESS (CONNECTOR LOCATION)
EB1	ENGINE ROOM MAIN WIRE AND RELAY WIRE (UNDER THE R/B NO. 5)
EC1	ENGINE WIRE AND ENGINE ROOM MAIN WIRE (UNDER THE J/B NO. 1)
ED1	COWL WIRE AND ENGINE ROOM MAIN WIRE (UNDER THE J/B NO. 1)
EE1	SENSOR WIRE AND ENGINE WIRE (SIDE OF FRONT CYLINDER HEAD)
EF1	ENGINE WIRE AND COWL WIRE (NEAR THE BRAKE MASTER CYLINDER)

▭ : Location of Connector Joining Wire Harness and Wire Harness

▽ : Location of Ground Points

[5S–FE]

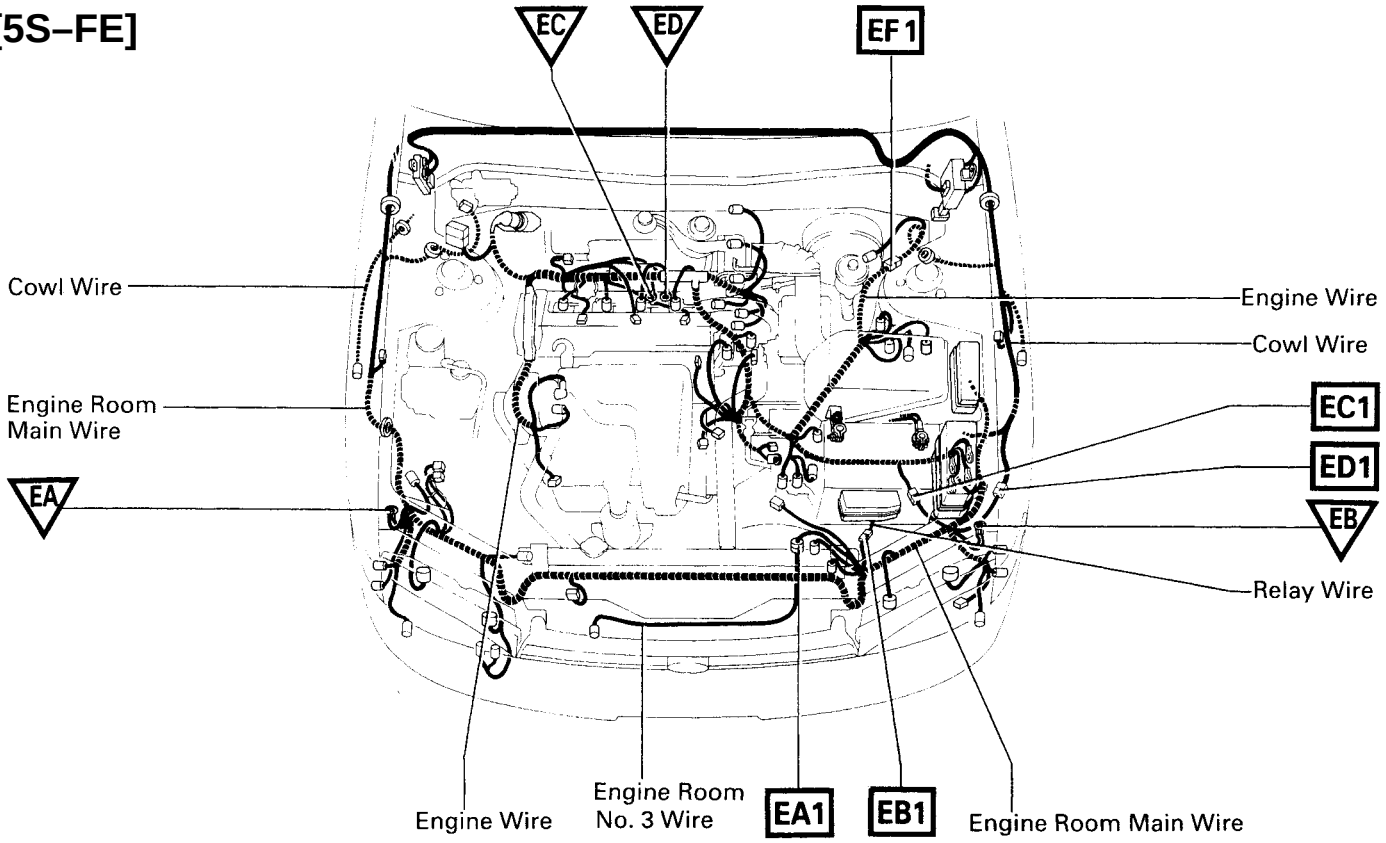

○ : Location of Splice Points

[5S–FE]

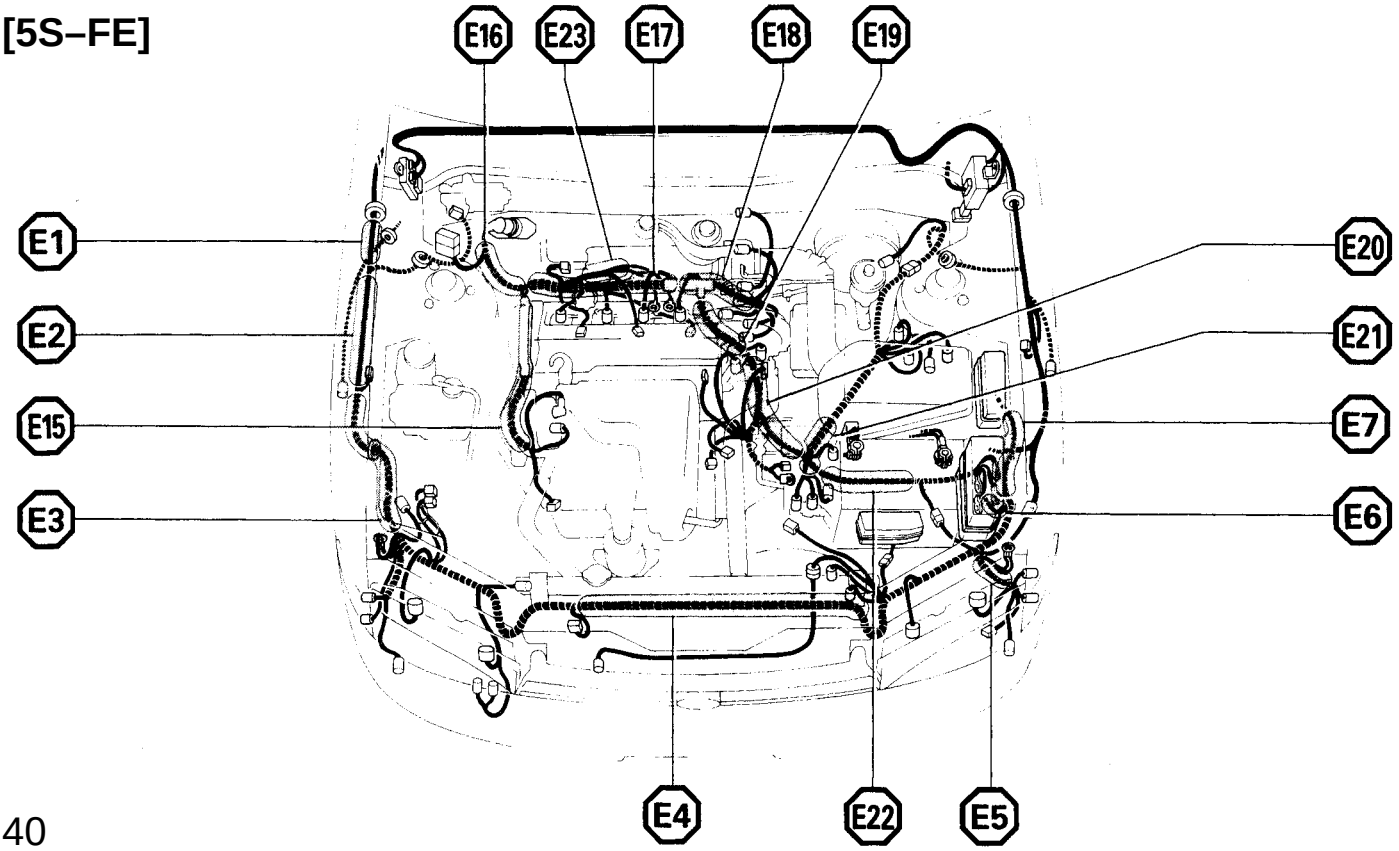

Connector Joining Wire Harness and Wire Harness

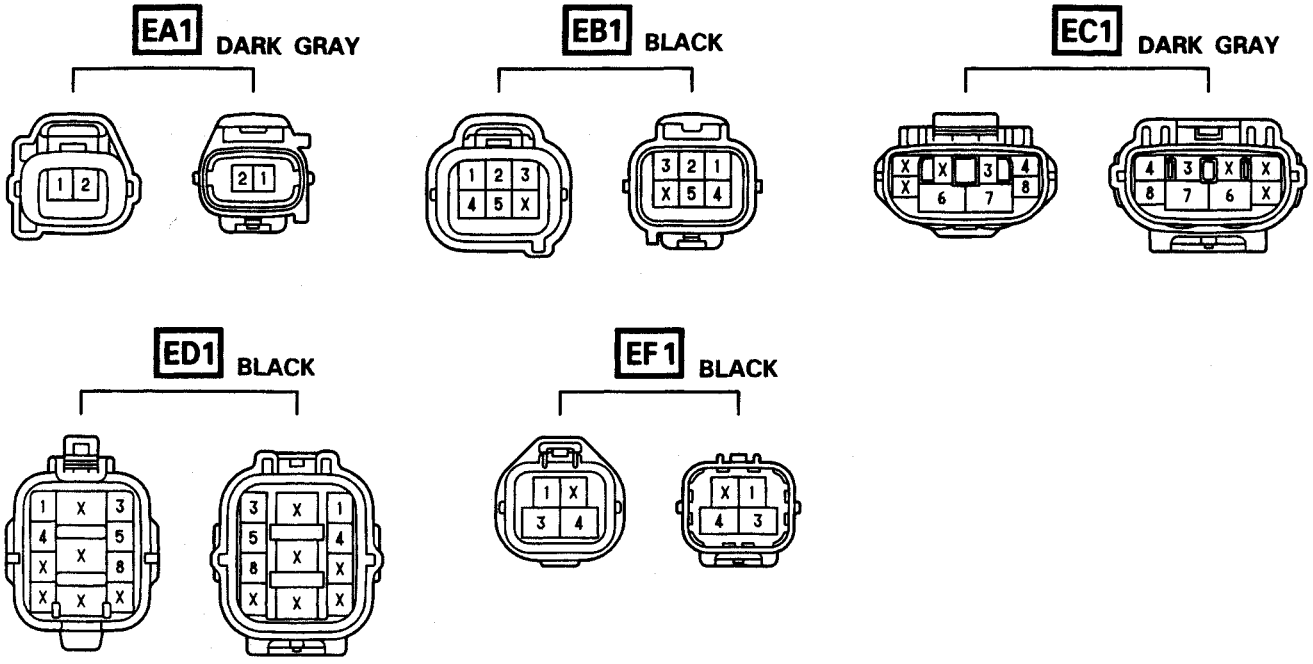

CODE	JOINING WIRE HARNESS AND WIRE HARNESS (CONNECTOR LOCATION)
EA1	ENGINE ROOM MAIN WIRE AND ENGINE ROOM NO. 3 WIRE (RADIATOR FAN SHROUD)
EB1	ENGINE ROOM MAIN WIRE AND RELAY WIRE (UNDER THE R/B NO. 5)
EC1	ENGINE WIRE AND ENGINE ROOM MAIN WIRE (UNDER THE J/B NO. 1)
ED1	COWL WIRE AND ENGINE ROOM MAIN WIRE (UNDER THE J/B NO. 1)
EF1	ENGINE WIRE AND COWL WIRE (NEAR THE BRAKE MASTER CYLINDER)

▭ : Location of Connector Joining Wire Harness and Wire Harness

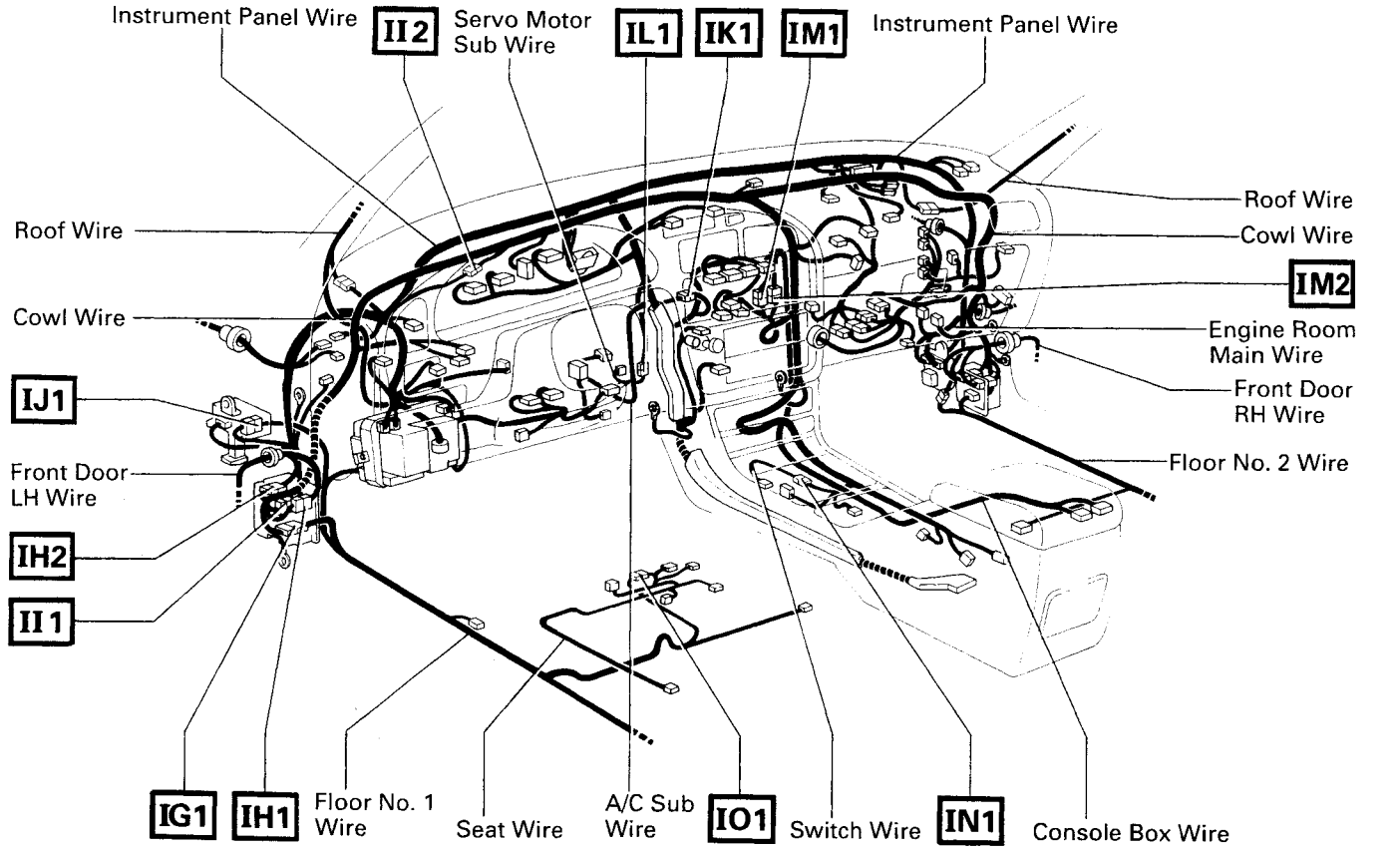

▽ : Location of Ground Points

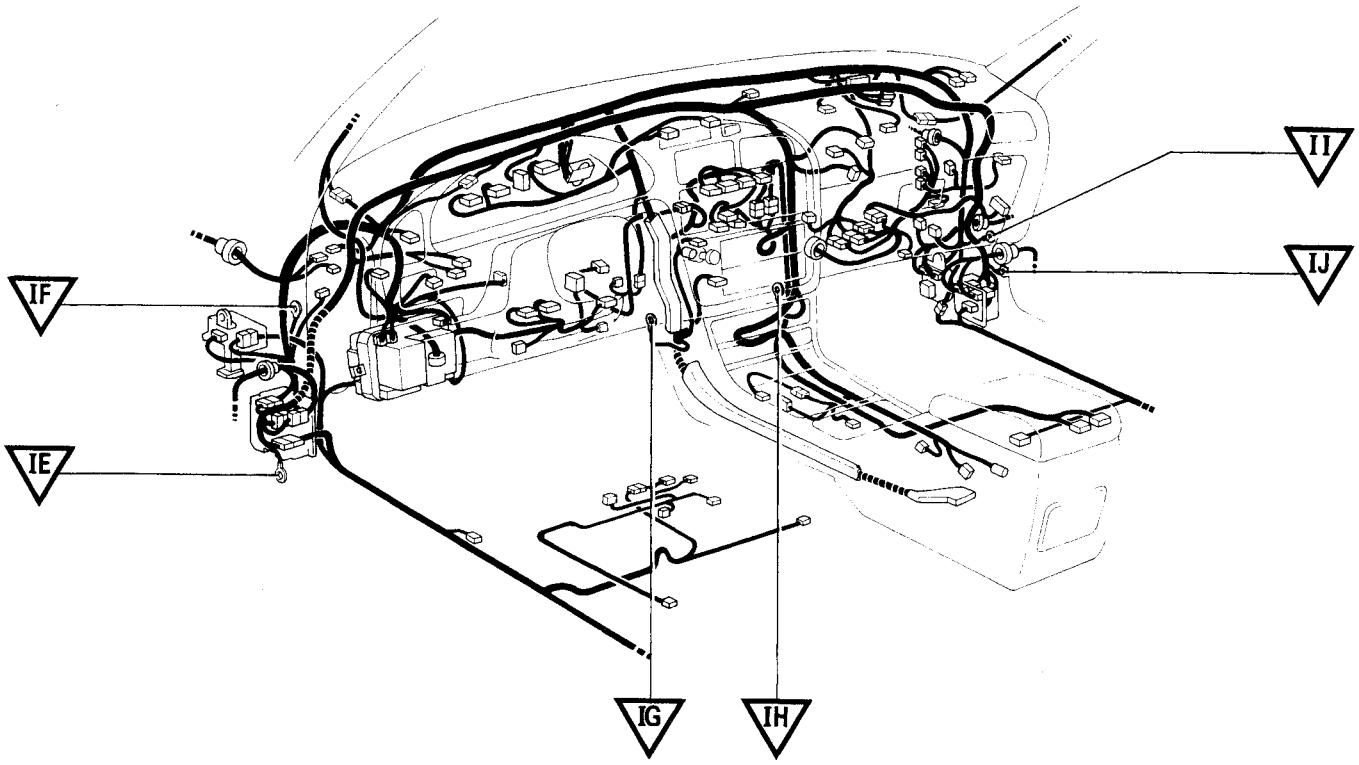

Connector Joining Wire Harness and Wire Harness

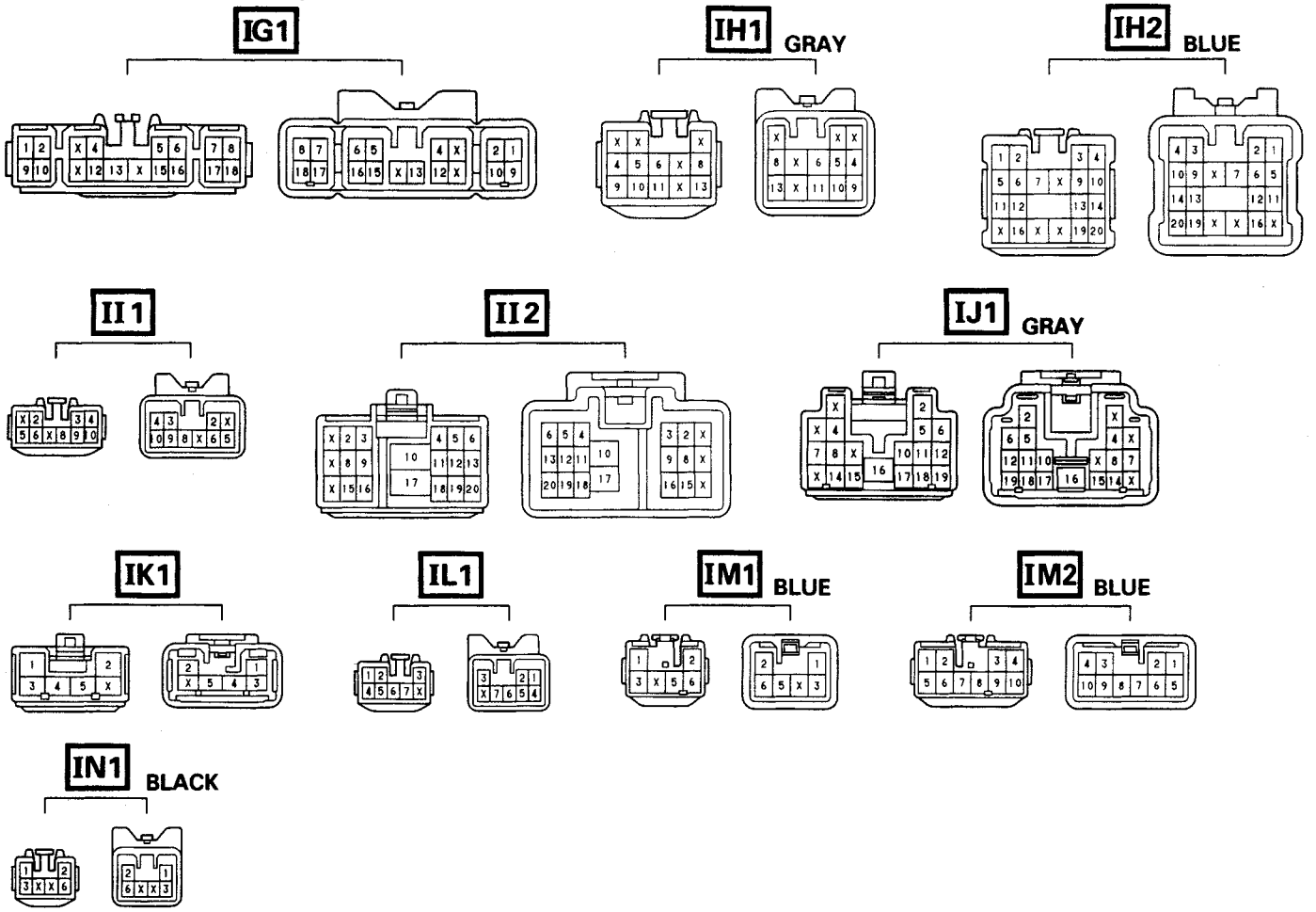

CODE	JOINING WIRE HARNESS AND WIRE HARNESS (CONNECTOR LOCATION)
IG1	FLOOR NO. 1 WIRE AND INSTRUMENT PANEL WIRE (LEFT KICK PANEL)
IH1	FRONT DOOR LH WIRE AND INSTRUMENT PANEL WIRE (LEFT KICK PANEL)
IH2	
II1	COWL WIRE AND INSTRUMENT PANEL WIRE (LEFT KICK PANEL)
II2	INSTRUMENT PANEL WIRE AND COWL WIRE (BEHIND COMBINATION METER)
IJ1	FLOOR NO. 1 WIRE AND COWL WIRE (LEFT KICK PANEL)
IK1	COWL WIRE AND A/C SUB WIRE (NEAR THE RADIO AND PLAYER)
IL1	COWL WIRE AND SERVO MOTOR SUB WIRE (BEHIND RADIO AND PLAYER)
IM1	INSTRUMENT PANEL WIRE AND CONSOLE BOX WIRE (NEAR THE RADIO AND PLAYER)
IM2	
IN1	INSTRUMENT PANEL WIRE AND SWITCH WIRE (UNDER THE INSTRUMENT PANEL CENTER)

▭ : Location of Connector Joining Wire Harness and Wire Harness

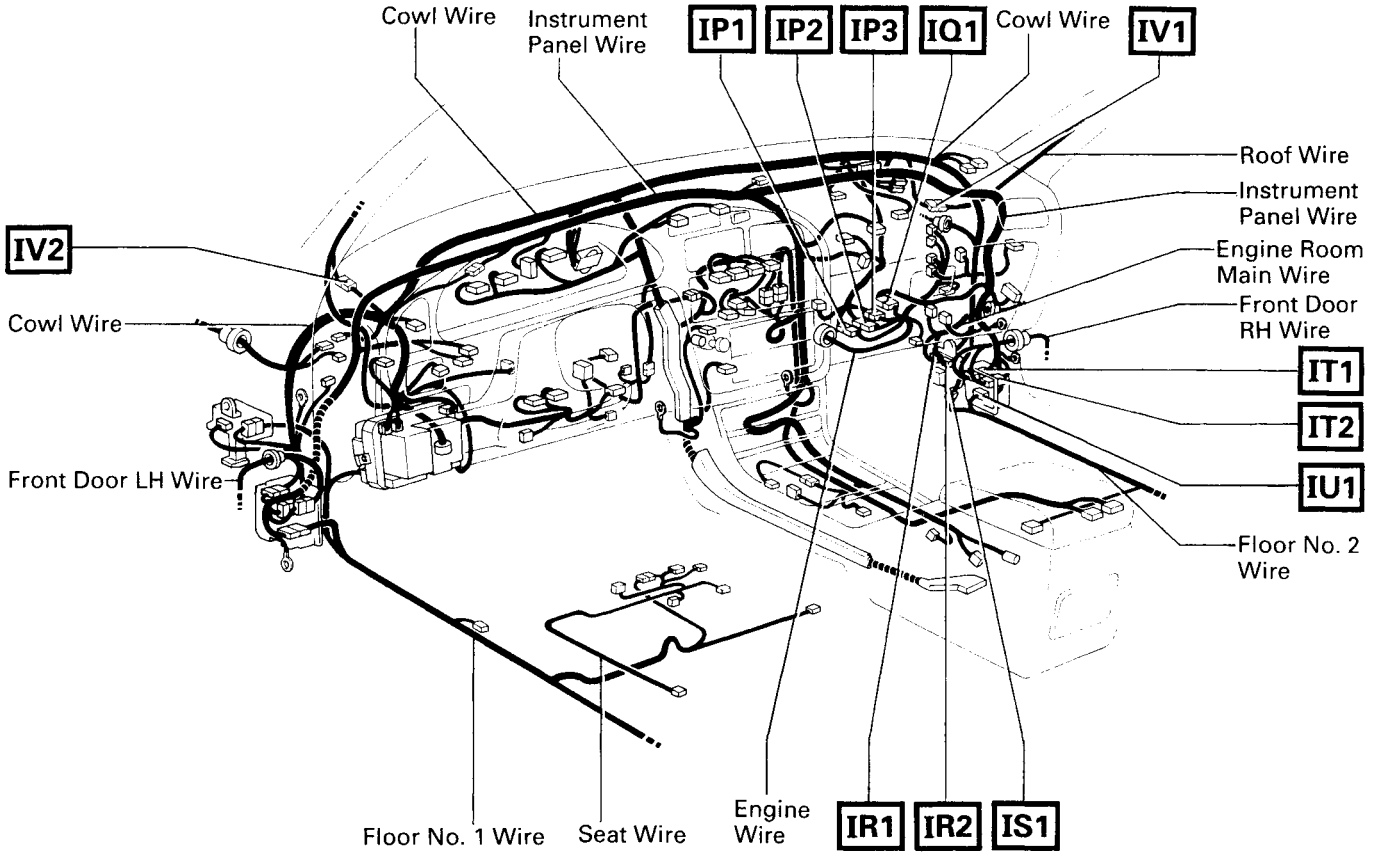

○ : Location of Splice Points

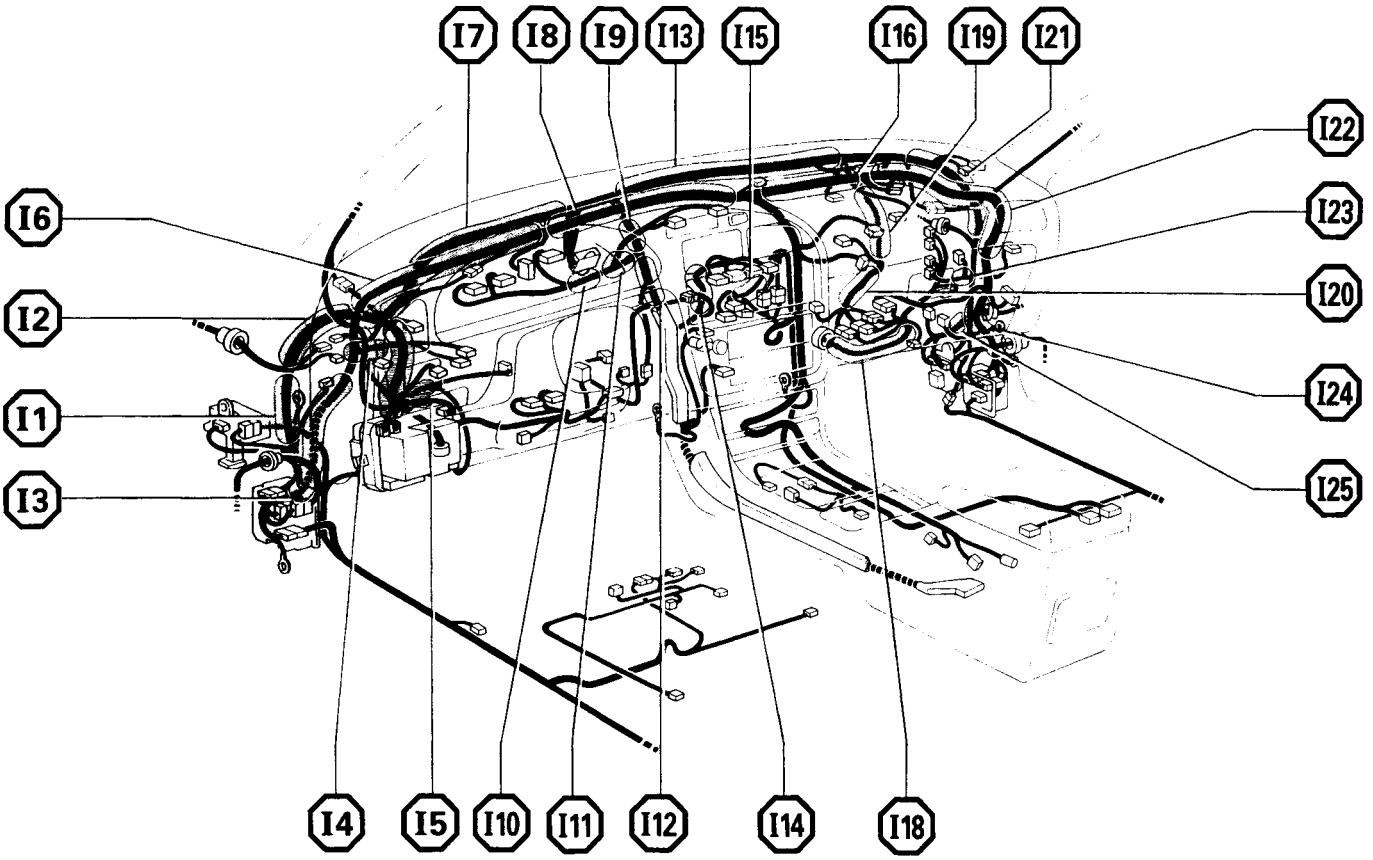

Connector Joining Wire Harness and Wire Harness

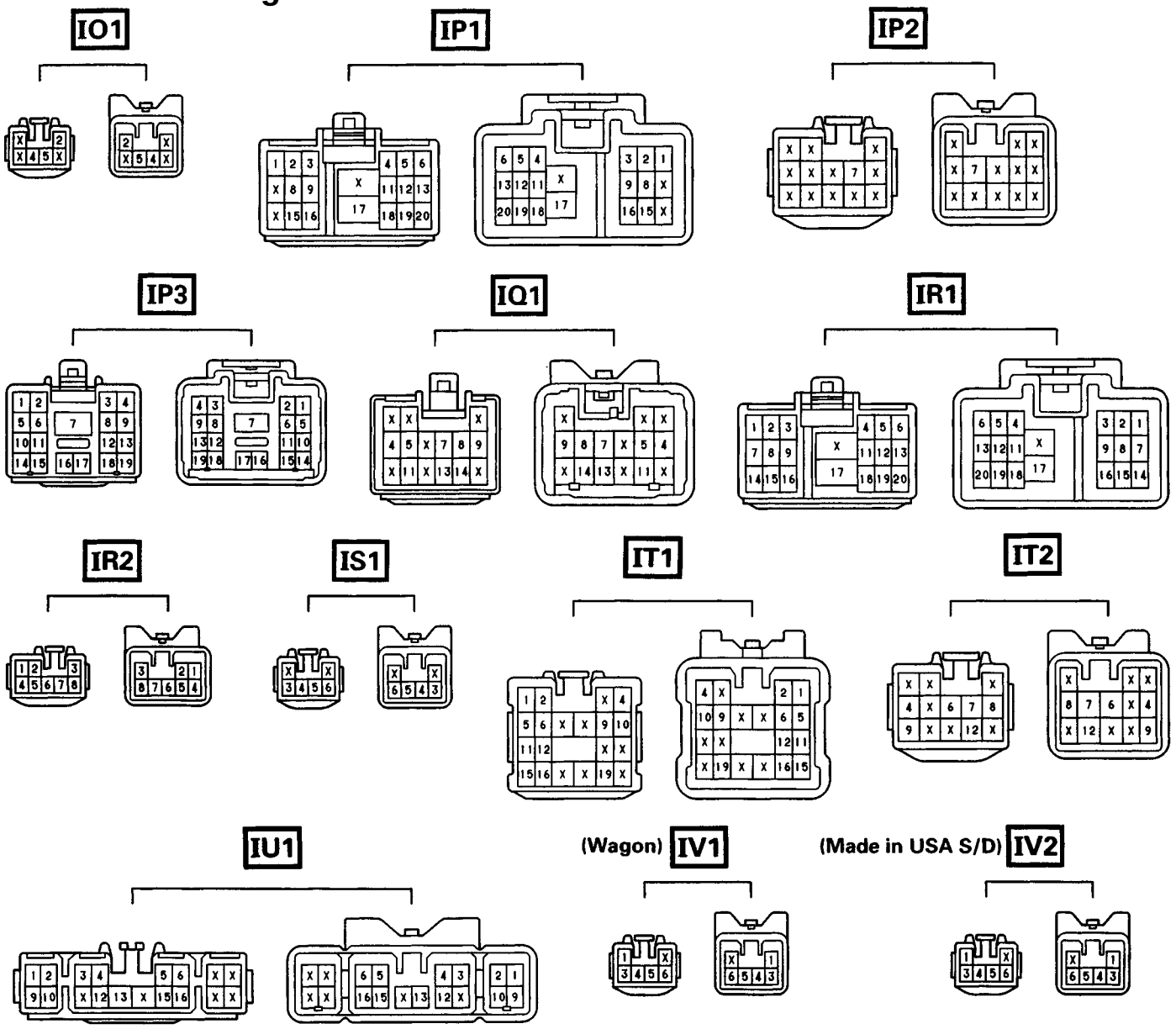

CODE	JOINING WIRE HARNESS AND WIRE HARNESS (CONNECTOR LOCATION)
IO1	FLOOR NO. 1 WIRE AND SEAT WIRE (UNDER THE DRIVER'S SEAT)
IP1	ENGINE WIRE AND COWL WIRE (UNDER THE GLOVE BOX)
IP2	
IP3	
IQ1	ENGINE WIRE AND INSTRUMENT PANEL WIRE (UNDER THE GLOVE BOX)
IR1	ENGINE ROOM MAIN WIRE AND COWL WIRE (RIGHT KICK PANEL)
IR2	
IS1	FLOOR NO. 2 WIRE AND COWL WIRE (RIGHT KICK PANEL)
IT1	FRONT DOOR RH WIRE AND INSTRUMENT PANEL WIRE (RIGHT KICK PANEL)
IT2	
IU1	FLOOR NO. 2 WIRE AND INSTRUMENT PANEL WIRE (RIGHT KICK PANEL)
IV1	ROOF WIRE AND COWL WIRE (INSTRUMENT PANEL RIGHT)
IV2	

▭ : Location of Connector Joining Wire Harness and Wire Harness

▽ : Location of Ground Points

[Sedan]

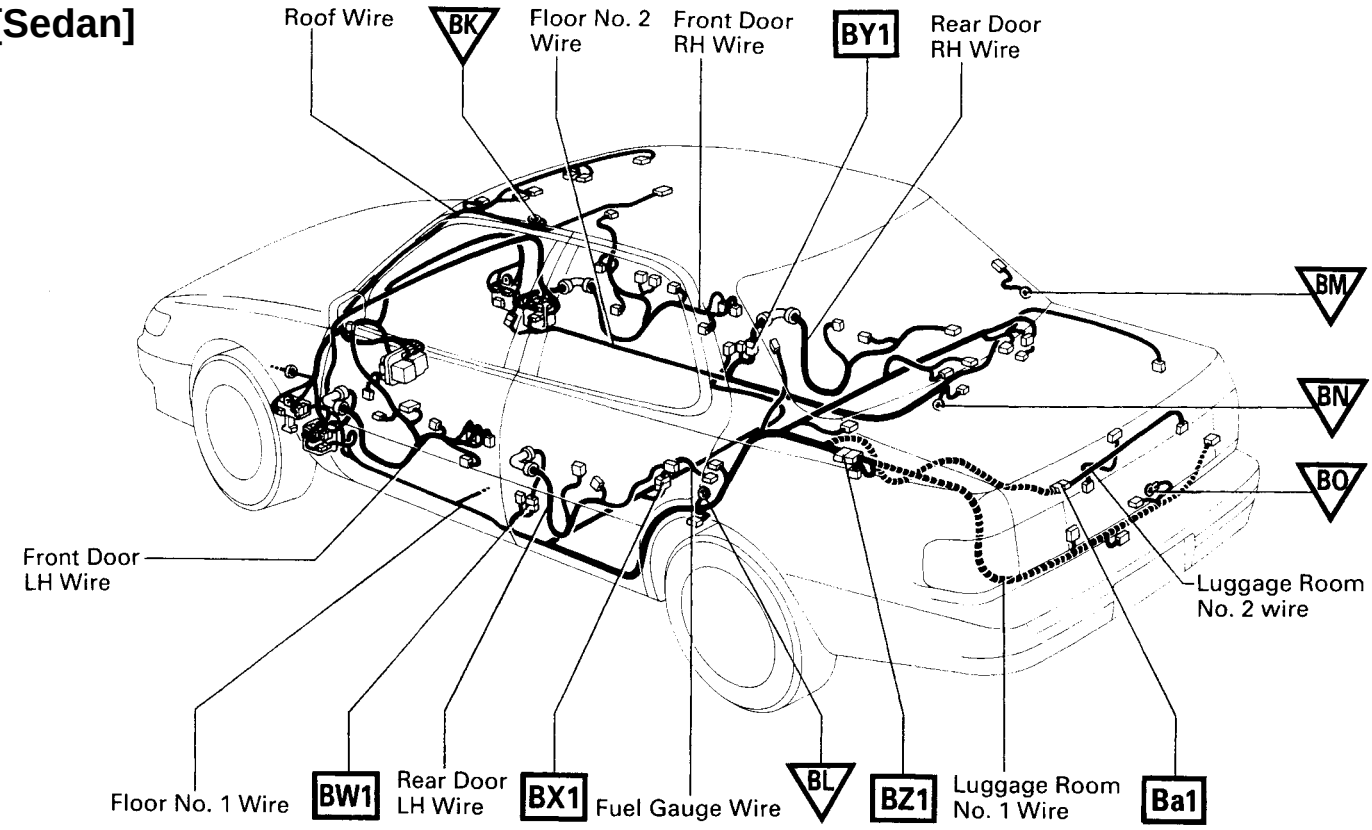

○ : Location of Splice Points

[Sedan]

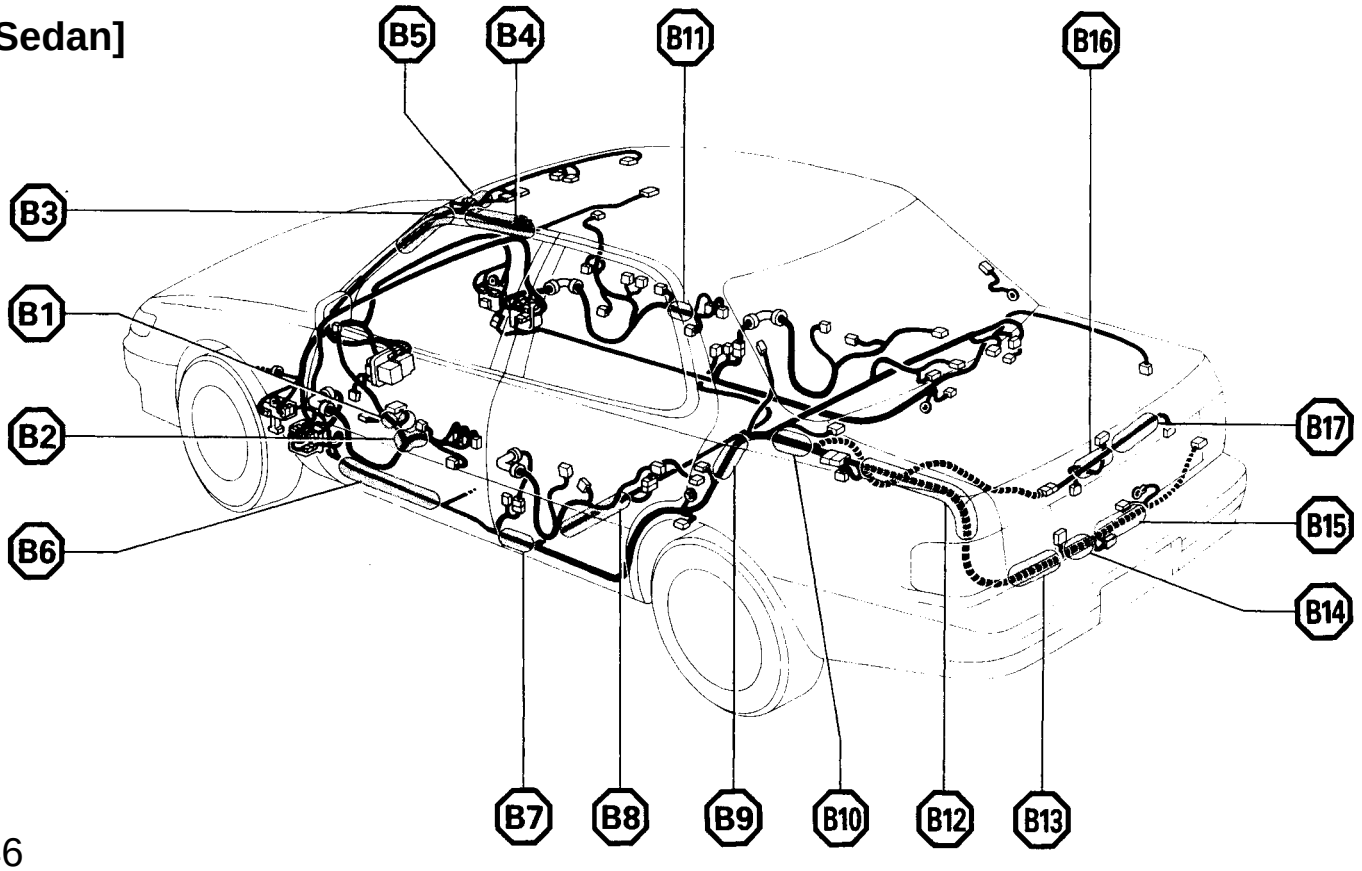

Connector Joining Wire Harness and Wire Harness

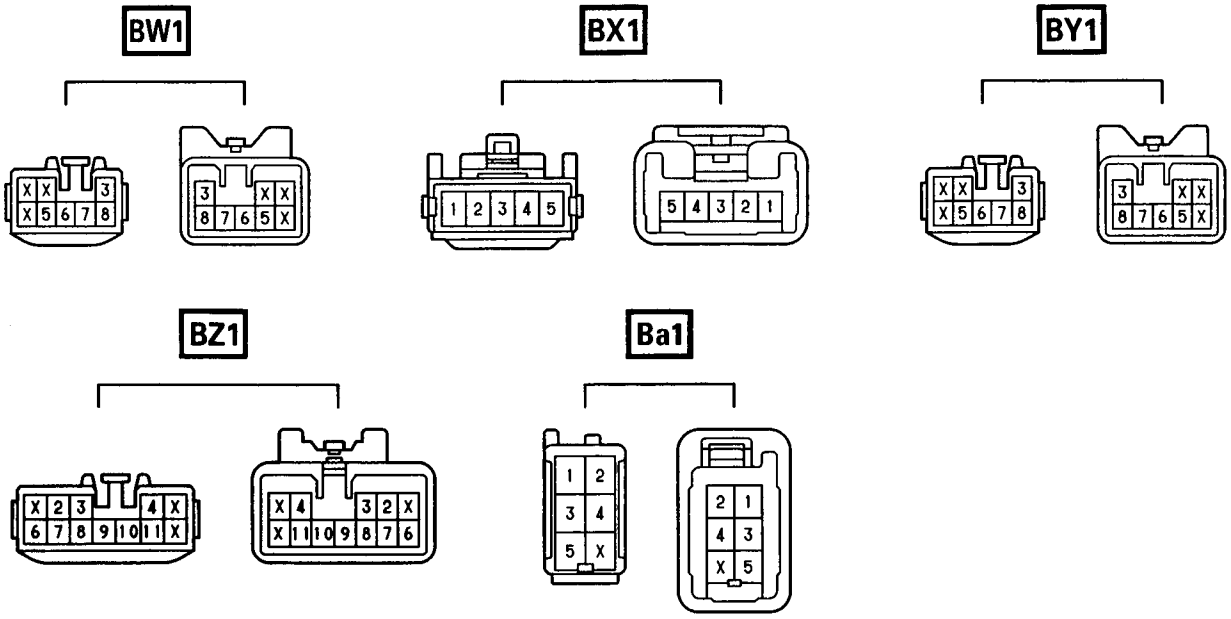

CODE	JOINING WIRE HARNESS AND WIRE HARNESS (CONNECTOR LOCATION)
BW1	REAR DOOR LH WIRE AND FLOOR NO. 1 WIRE (LEFT CENTER PILLAR)
BX1	FUEL GAUGE WIRE AND FLOOR NO. 1 WIRE (UNDER THE REAR SEAT CUSHION)
BY1	REAR DOOR RH WIRE AND FLOOR NO. 2 WIRE (RIGHT CENTER PILLAR)
BZ1	LUGGAGE ROOM NO. 1 WIRE AND FLOOR NO. 1 WIRE (LUGGAGE COMPARTMENT LEFT)
Ba1	FLOOR NO. 1 WIRE AND LUGGAGE ROOM NO. 2 WIRE (LUGGAGE COMPARTMENT DOOR)

▭ : Location of Connector Joining Wire Harness and Wire Harness

▽ : Location of Ground Points

[Coupe]

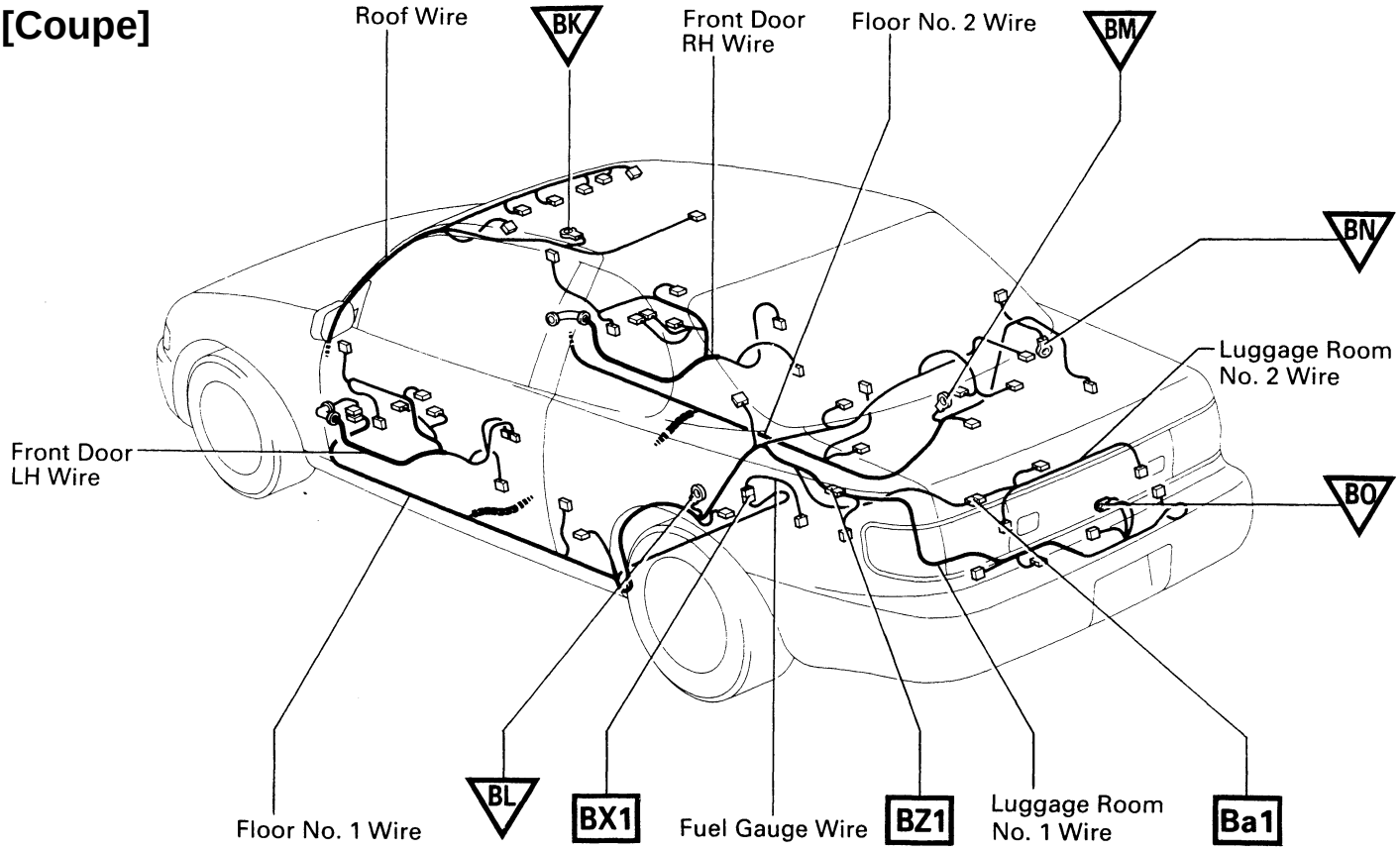

○ : Location of Splice Points

[Coupe]

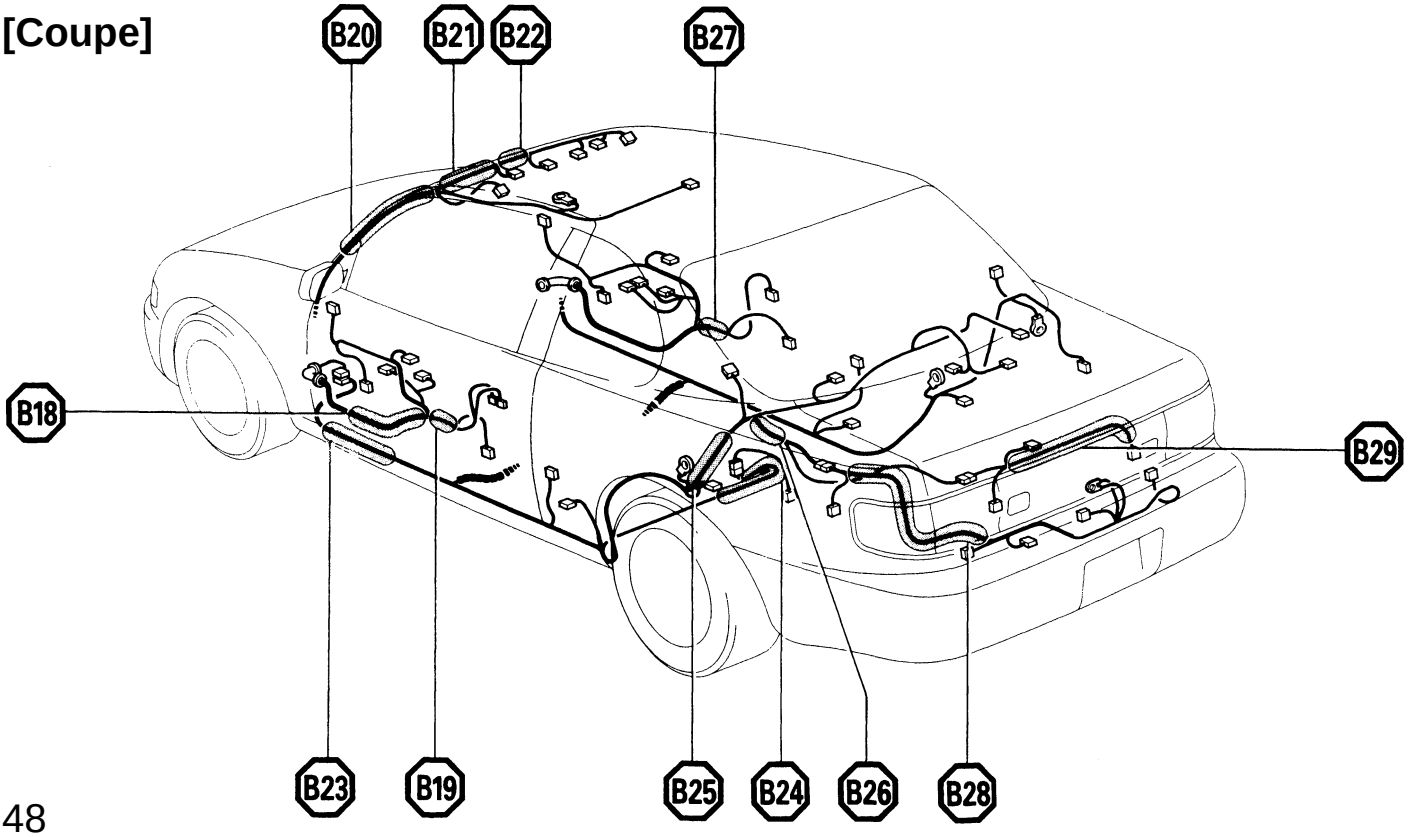

Connector Joining Wire Harness and Wire Harness

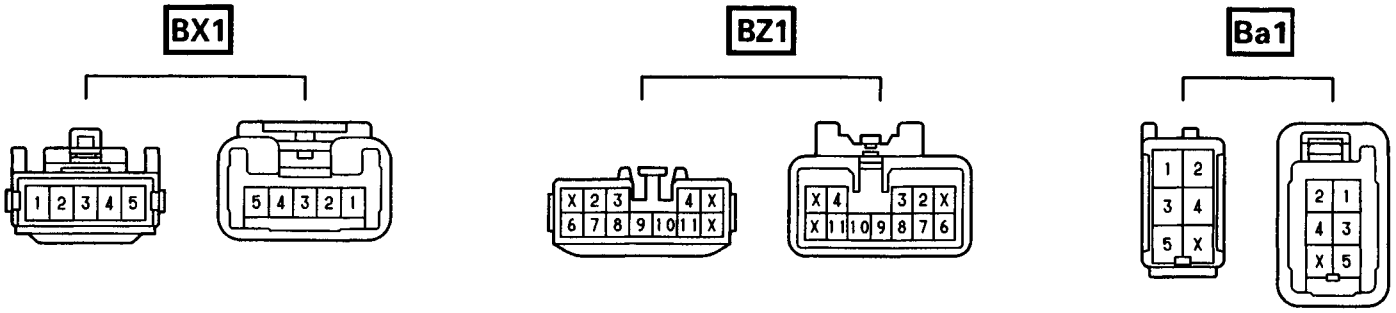

CODE	JOINING WIRE HARNESS AND WIRE HARNESS (CONNECTOR LOCATION)
BX1	FUEL GAUGE WIRE AND FLOOR NO. 1 WIRE (UNDER THE REAR SEAT CUSHION)
BZ1	LUGGAGE ROOM NO. 1 WIRE AND FLOOR NO. 1 WIRE (LUGGAGE COMPARTMENT LEFT)
Ba1	FLOOR NO. 1 WIRE AND LUGGAGE ROOM NO. 2 WIRE (LUGGAGE COMPARTMENT DOOR)

▭ : Location of Connector Joining Wire Harness and Wire Harness

▽ : Location of Ground Points

[Wagon]

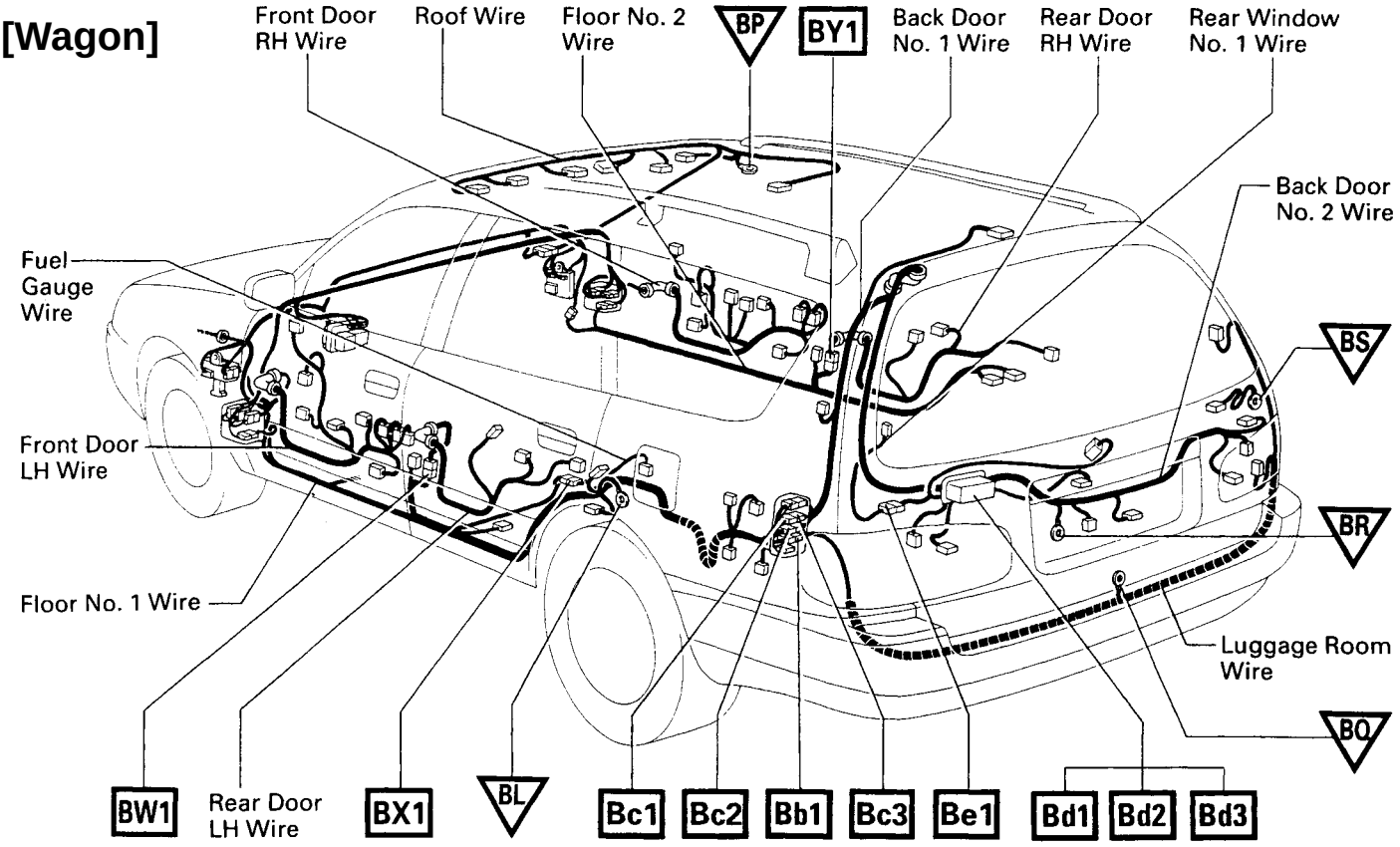

○ : Location of Splice Points

[Wagon]

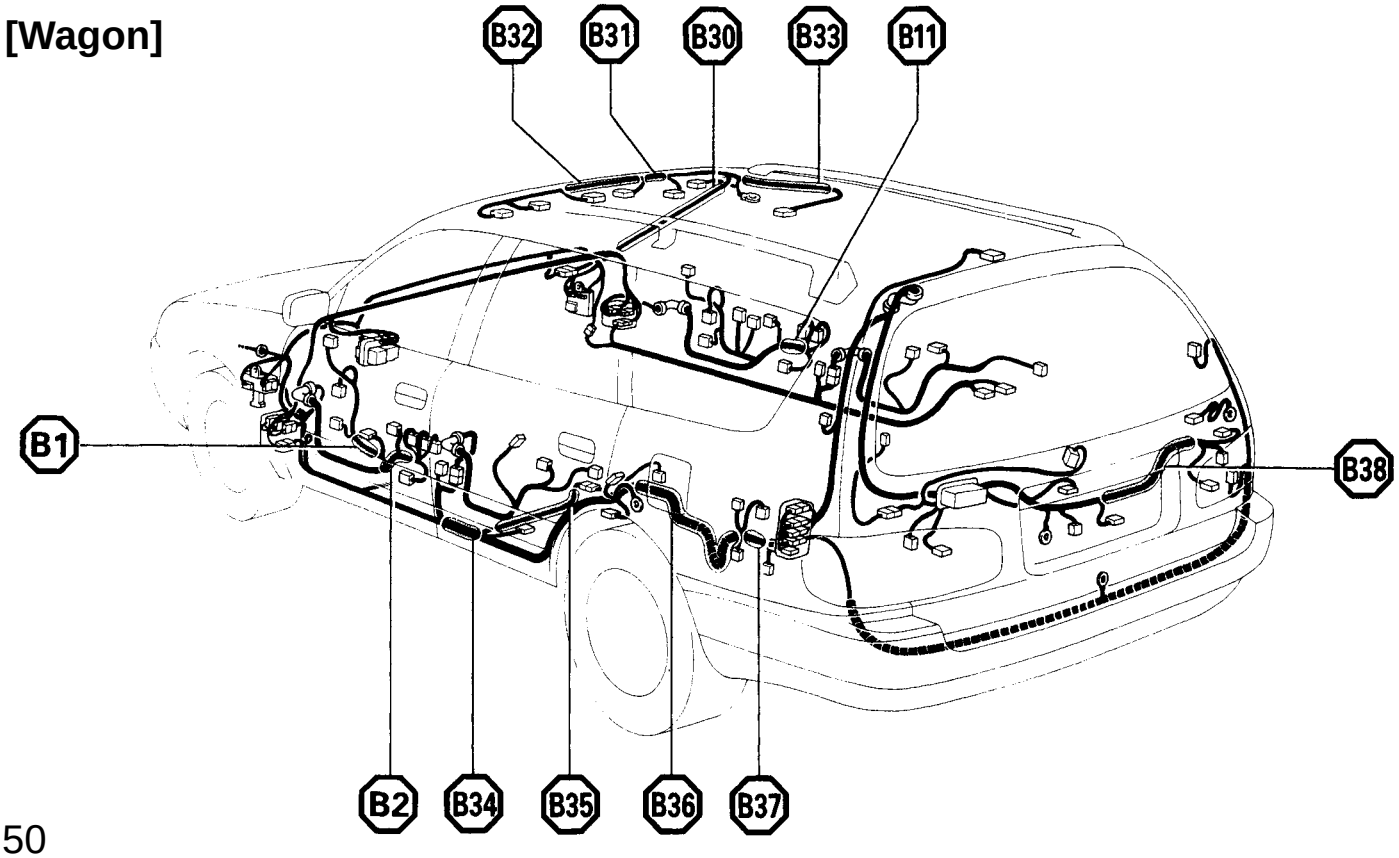

Connector Joining Wire Harness and Wire Harness

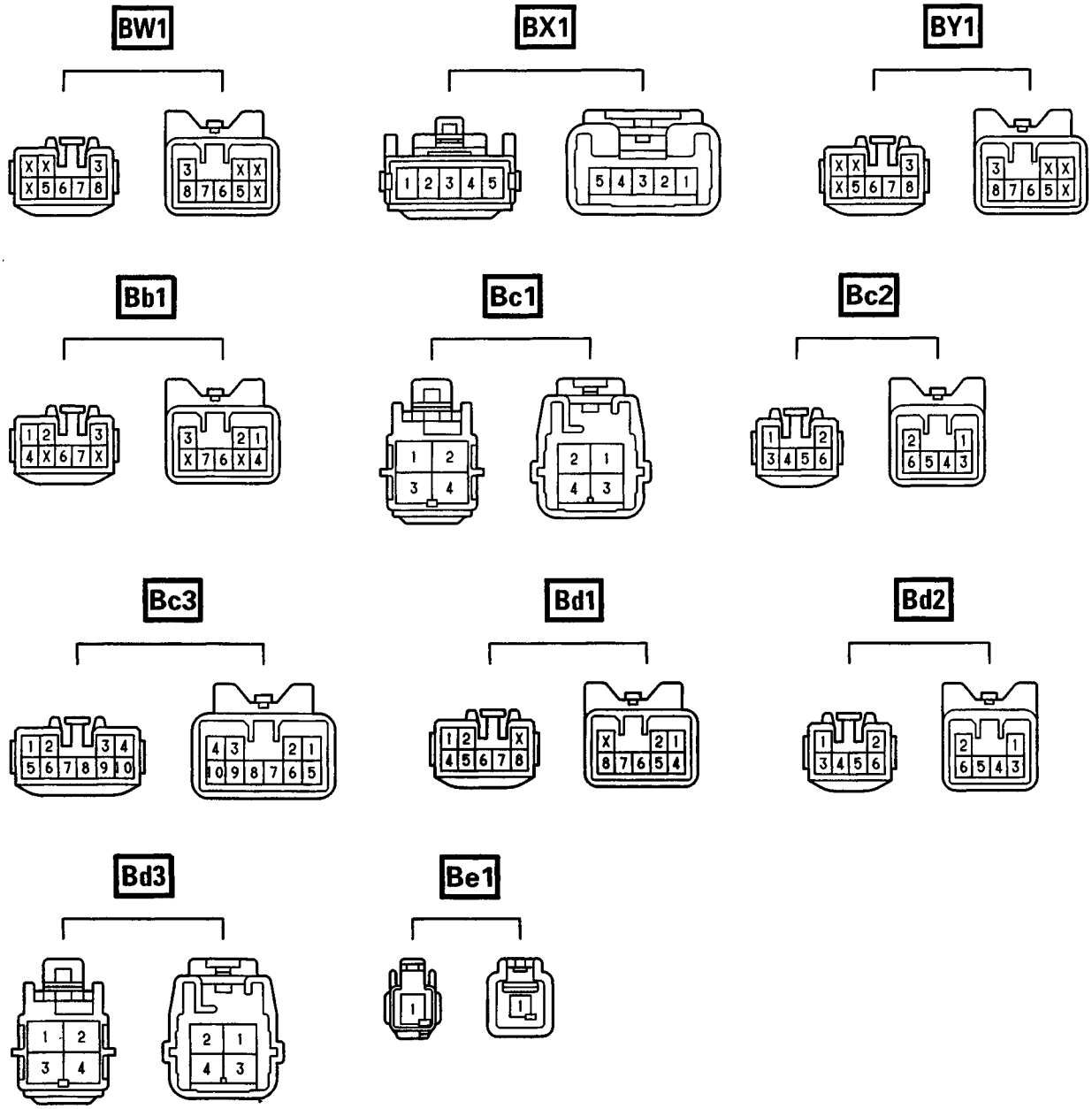

CODE	JOINING WIRE HARNESS AND WIRE HARNESS (CONNECTOR LOCATION)
BW1	REAR DOOR LH WIRE AND FLOOR NO. 1 WIRE (LEFT CENTER PILLAR)
BX1	FUEL GAUGE WIRE AND FLOOR NO. 1 WIRE (UNDER THE REAR SEAT CUSHION)
BY1	REAR DOOR RH WIRE AND FLOOR NO. 2 WIRE (RIGHT CENTER PILLAR)
Bb1	LUGGAGE ROOM NO. 1 WIRE AND FLOOR NO. 1 WIRE (LUGGAGE COMPARTMENT LEFT)
Bc1	BACK DOOR NO. 1 (WIRE AND FLOOR NO. 1 WIRE (LEFT QUARTER TRIM INNER)
Bc2	
Bc3	
Bd1	BACK DOOR NO. 1 WIRE AND BACK DOOR NO. 2 WIRE (BACK DOOR LEFT)
Bd2	
Bd3	
Be1	REAR WINDOW NO. 1 WIRE AND BACK DOOR NO. 2 WIRE (BACK DOOR LEFT)

POWER SOURCE (Current Flow Chart)

The chart below shows the route by which current flows from the battery to each electrical source (Fusible Link, Circuit Breaker, Fuse, etc.) and other parts.

The next page and following pages show the parts to which each electrical source outputs current.

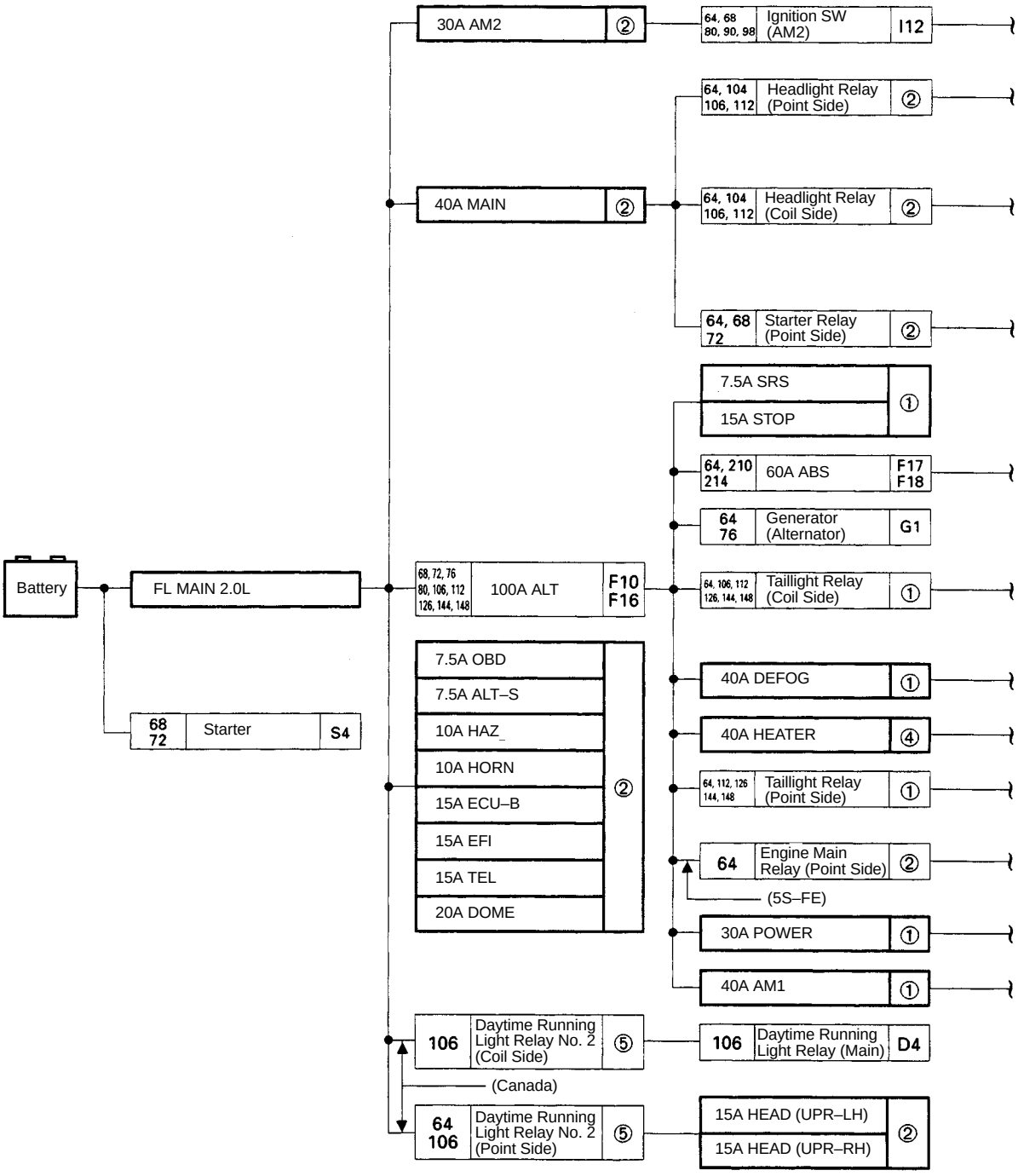

[LOCATION] (1) : J/B No. 1 (See page 20)
(2) : J/B No. 2 (See page22)
(3) : R/B No. 1 (See page25)
(7) : R/B No. 7 (See page27)

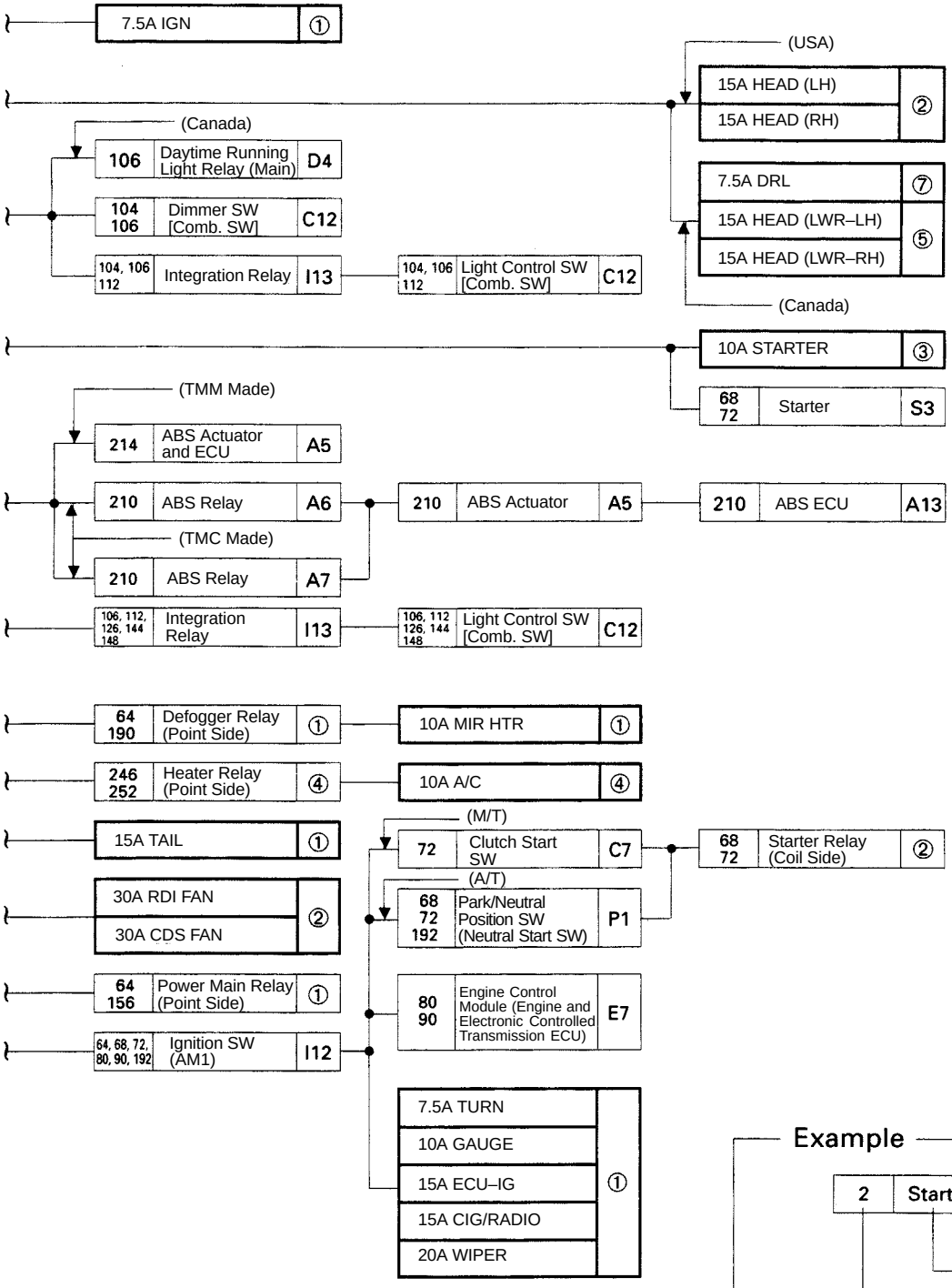

* These are the page numbers of the first page on which the related system is shown.
The part indicated is located somewhere in the system, not necessarily on the page indicated here.

(4) : R/B No. 4 (See page25) (5) : R/B No. 5 (See page 26) (6) R/B No. 6 (See Page26)

POWER SOURCE (Current Flow Chart)

Location	CB or Fuse		*Page Nos. of Related Systems	242	242 246 252	246 252	214	210	214	210	210	246 252	252	126 252	210	210	246	246 252	126	222 224	152	236	166	246 252	246 252	126 246 252	220	160 166	220
			Parts	A/C Condenser Fan Motor (5S–FE)	A/C Triple Pressure SW (A/C Dual and Single Pressure SW)	A/C Magnetic Clutch and Lock Sensor	ABS Actuator and ECU (TMM Made)	ABS Actuator (TMC Made)	ABS Actuator and ECU (TMM Made)	ABS Relay	ABS Relay	A/C Amplifier	A/C Evaporator Temp. Sensor	A/C SW	ABS ECU (TMC Made)	ABS ECU (TMC Made)	Air Inlet Control Servo Motor	Air Vent Mode Control Servo Motor	Ashtray Illumination	Auto Antenna Motor and Relay	Back–Up Light SW (M/T)	Brake Fluid Level SW	Back Door Lock Control SW	Blower Motor	Blower Resistor	Blower SW	Buckle SW LH	Back Door Lock Motor (W/G)	Buckle SW RH
			Code or Location	A1	A2	A3	A4	A5		A6	A7	A10	A11	A12	A13	A14	A16	A17	A18	A21	B1	B2	B3	B4	B5	B6	B7	B9	B10
①	40A	AM1																										
	15A	CIG/RADIO																		●								
	40A	DEFOG																										
	15A	ECU–1G		●		●		●						●					●							●		●
	10A	GAUGE		●	●	●	●	●	●	●	●	●		●	●	●	●			●	●							
	7.5A	IGN																										
	10A	MIR–HTR																										
	30A	POWER																				●					●	
	7.5A	SRS																										
	15A	STOP					●		●						●													
	15A	TAIL											●					●							●			
	7.5A	TURN																										
	20A	WIPER																										
②	30A	AM2																										
	7.5A	ALT–S																										
	30A	CDS FAN	●																									
	20A	DOME																	●									
	15A	ECU–B												●														
	15A	EFI																										
	10A	HAZ																										
	15A	HEAD (LWR–LH)																										
	15A	HEAD (LWR–RH)																										
	15A	HEAD (UPR–LH)																										
	15A	HEAD (UPR–RH)																										
	15A	HEAD LH																										
	15A	HEAD RH																										
	10A	HORN																										
	40A	MAIN																										
	7.5A	OBD																										
③	10A	STARTER																										
④	10A	A/C										●		●														
	40A	HEATER																						●	●	●		
⑦	7.5A	DRL																										
⑧	100A	ALT											●					●							●			
	60A	ABS					●	●	●	●	●			●														

* These are the page numbers of the first page on which the related system is shown.
The part indicated is located somewhere in the system, not necessarily on the page indicated here.

[LOCATION] (1) : J/B No. 1 (See page 20) (2) : J/B No. 2 (See page 22) (3) : R/B No. 1 (See page 25)
(7) : R/B No. 7 (See page 27) (8) : Fuse Box (F10, F17 See on page 28 29)

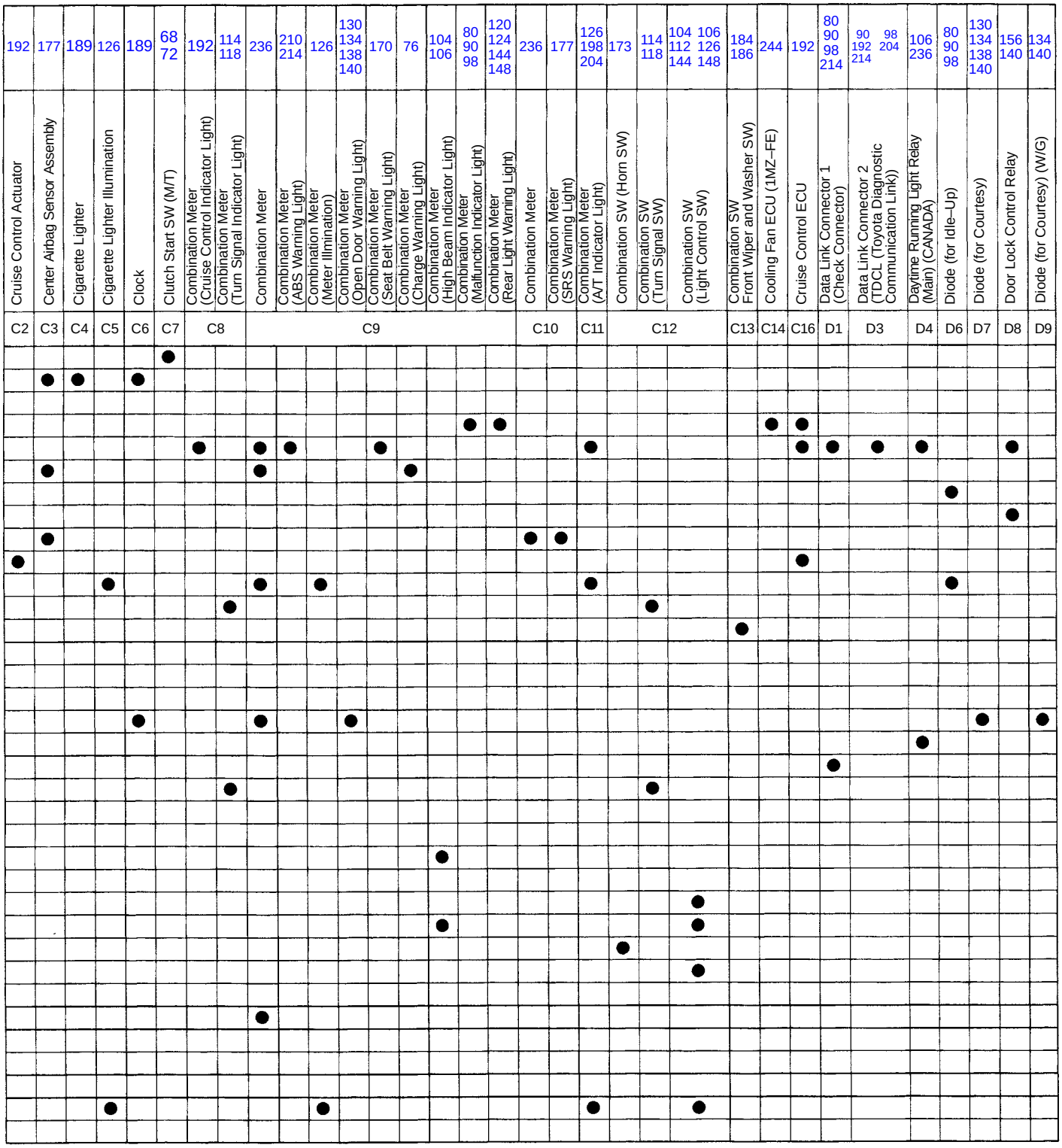

(4) : R/B No. 4 (See page25) (5) : R/B No. 5 (See page 26) (6) R/B No. 6 (See Page26)

POWER SOURCE (Current Flow Chart)

Location			*Page Nos. of Related Systems	130 138 140	130 134 138 140	130 134 138 140	130 134 138 140	130 138	160	160	160	160	160	160	160	80	220	198 220	220	242	126 198 204	80 90 98 198	80	80
			Parts	Door Courtesy SW Front LH	Door Courtesy SW Front RH	Door Courtesy SW Rear LH	Door Courtesy SW Rear RH	Door Key Cylinder Light and SW	Door Key Lck and Unlock SW LH (Ex. C/P)	Door Key Lck and Unlock SW RH (Ex. C/P)	Door Lock Control SW RH	Door Lock Motor and Door Unlock Detection SW Front LH	Door Lock Motor and Door Unlock Detection SW Front RH	Door Lock Motor Rear LH (EX. C/P)	Door Lock Motor Rear RH (EX. C/P)	Date Ling Connector 3	Diode (for Tension Reducer) (C/P)	Electronic Controlled Transmission Solenoid	Electronic Controlled Transmission Solenoid (5S–FE)	Engine Coolant Temp. Sensor (Water Temp. Sensor) (for Cooling Fan) (1MZ–FE)	Engine Controlled Transmission Pattern Select SW	Engine Control Module (Engine and Electronic Controlled Transmission ECU)	Engine Control Module (Engine and Electronic Controlled Transmission ECU) (A/T) (5S–FE)	Engine Control Module (Engine and Electronic Controlled Transmission ECU) (A/T) (1MZ–FE)
			Code or Location	D12	D13	D14	D15	D16	D17	D18	D19	D20	D21	D22	D23	D24	D25	E2	E3	E5	E6	E7	E8	E9
			CB or Fuse																					
①	40A	AM1																				●		
	15A	CIG/RADIO																						
	40A	DEFOG																						
	15A	ECU–1G															●	●	●	●				
	10A	GAUGE																			●			●
	7.5A	IGN																						
	10A	MIR–HTR																						
	30A	POWER							●	●	●	●	●	●	●									
	7.5A	SRS																						
	15A	STOP																						
	15A	TAIL																			●			
	7.5A	TURN																						
	20A	WIPER																						
②	30A	AM2																				●		
	7.5A	ALT–S																						
	30A	CDS FAN																						
	20A	DOME	●	●	●	●	●																	
	15A	ECU–B																						
	15A	EFI																●				●	●	●
	10A	HAZ																						
	15A	HEAD (LWR–LH)																						
	15A	HEAD (LWR–RH)																						
	15A	HEAD (UPR–LH)																						
	15A	HEAD (UPR–RH)																						
	15A	HEAD LH																						
	15A	HEAD RH																						
	10A	HORN																						
	40A	MAIN																						
	7.5A	OBD														●								
③	10A	STARTER																				●		
④	10A	A/C																						
	40A	HEATER																						
⑦	7.5A	DRL																						
⑧	100A	ALT																			●			
	60A	ABS																						

* These are the page numbers of the first page on which the related system is shown.
The part indicated is located somewhere in the system, not necessarily on the page indicated here.

[LOCATION] (1) : J/B No. 1 (See page 20) (2) : J/B No. 2 (See page 22) (3) : R/B No. 1 (See page 25)
(7) : R/B No. 7 (See page 27) (8) : Fuse Box (F10, F17 See on page 28 29)

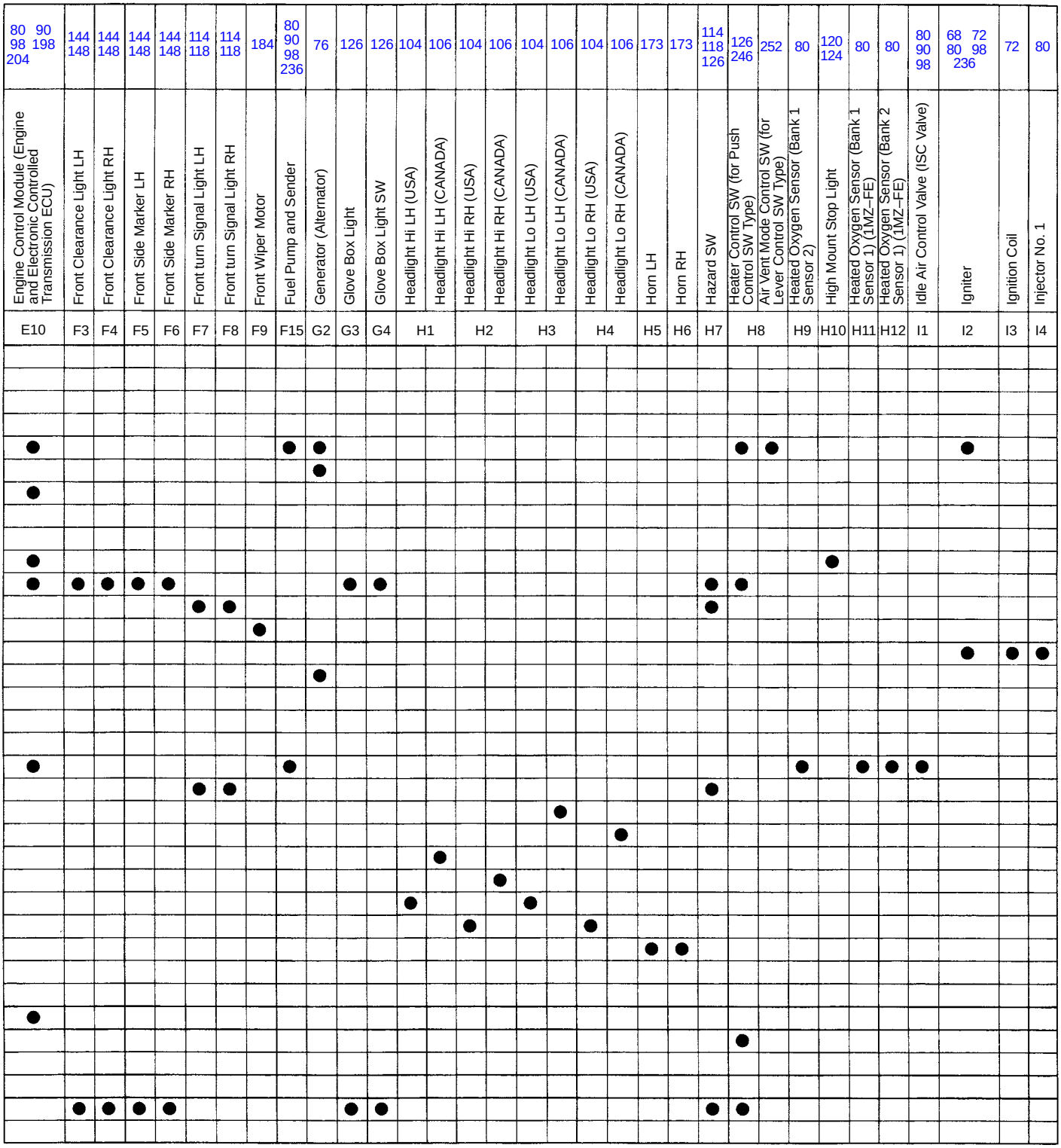

(4) : R/B No. 4 (See page25) (5) : R/B No. 5 (See page 26) (6) R/B No. 6 (See Page26)

POWER SOURCE (Current Flow Chart)

Location			*Page Nos. of Related Systems	80	80	80	80	80	130 134 138 140	68 72 80	106 112 120 126 130 140 144 170	130 134 138 140	68 80	68 80	68 80	68 80	68 80	68 80	76 90 98 114 118 120 130 134 138 170 192 210 214 224 246 252	80 126 154 156 182 189 190 198 204 236	130 134 154 156 160 168 182 198 204 214 222 224 226 228 230 234 236	177
			Parts	Injector No. 2	Injector No. 3	Injector No. 4	Injector No. 5 (1MZ–FE)	Injector No. 6 (1MZ–FE)	Injector Key Cylinder Light	Ignition SW and Unlock Warning SW	Integration Relay	Interior Light	Ignition Coil No. 1 (1MZ–FE)	Ignition Coil No. 2 (1MZ–FE)	Ignition Coil No. 3 (1MZ–FE)	Ignition Coil No. 4 (1MZ–FE)	Ignition Coil No. 5 (1MZ–FE)	Ignition Coil No. 6 (1MZ–FE)	Junction Connector	Junction Connector	Junction Connector	Junction Connector (for Airbag System)
			Code or Location																			
			CB or Fuse	I5	I6	I7	I8	I9	I11	I12	I13	I14	I16	I17	I18	I19	I20	I21	J1	J2	J3	J4
①	40A	AM1								●												
	15A	CIG/RADIO																		●	●	
	40A	DEFOG																				
	15A	ECU–1G																		●		
	10A	GAUGE									●								●	●	●	
	7.5A	IGN																	●			
	10A	MIR–HTR																				
	30A	POWER																		●		
	7.5A	SRS																				●
	15A	STOP																				
	15A	TAIL																		●		
	7.5A	TURN																	●			
	20A	WIPER																				
②	30A	AM2	●	●	●	●	●		●				●	●	●	●	●					
	7.5A	ALT–S																				
	30A	CDS FAN																				
	20A	DOME						●		●		●							●		●	
	15A	ECU–B																				
	15A	EFI																				
	10A	HAZ																	●			
	15A	HEAD (LWR–LH)																				
	15A	HEAD (LWR–RH)																				
	15A	HEAD (UPR–LH)																				
	15A	HEAD (UPR–RH)																				
	15A	HEAD LH																				
	15A	HEAD RH																				
	10A	HORN																				
	40A	MAIN									●											
	7.5A	OBD																				
③	10A	STARTER																				
④	10A	A/C																				
	40A	HEATER																				
⑦	7.5A	DRL																				
⑧	100A	ALT									●									●		
	60A	ABS																				

* These are the page numbers of the first page on which the related system is shown.
The part indicated is located somewhere in the system, not necessarily on the page indicated here.

[LOCATION] (1) : J/B No. 1 (See page 20) (2) : J/B No. 2 (See page 22) (3) : R/B No. 1 (See page 25)
(7) : R/B No. 7 (See page 27) (8) : Fuse Box (F10, F17 See on page 28 29)

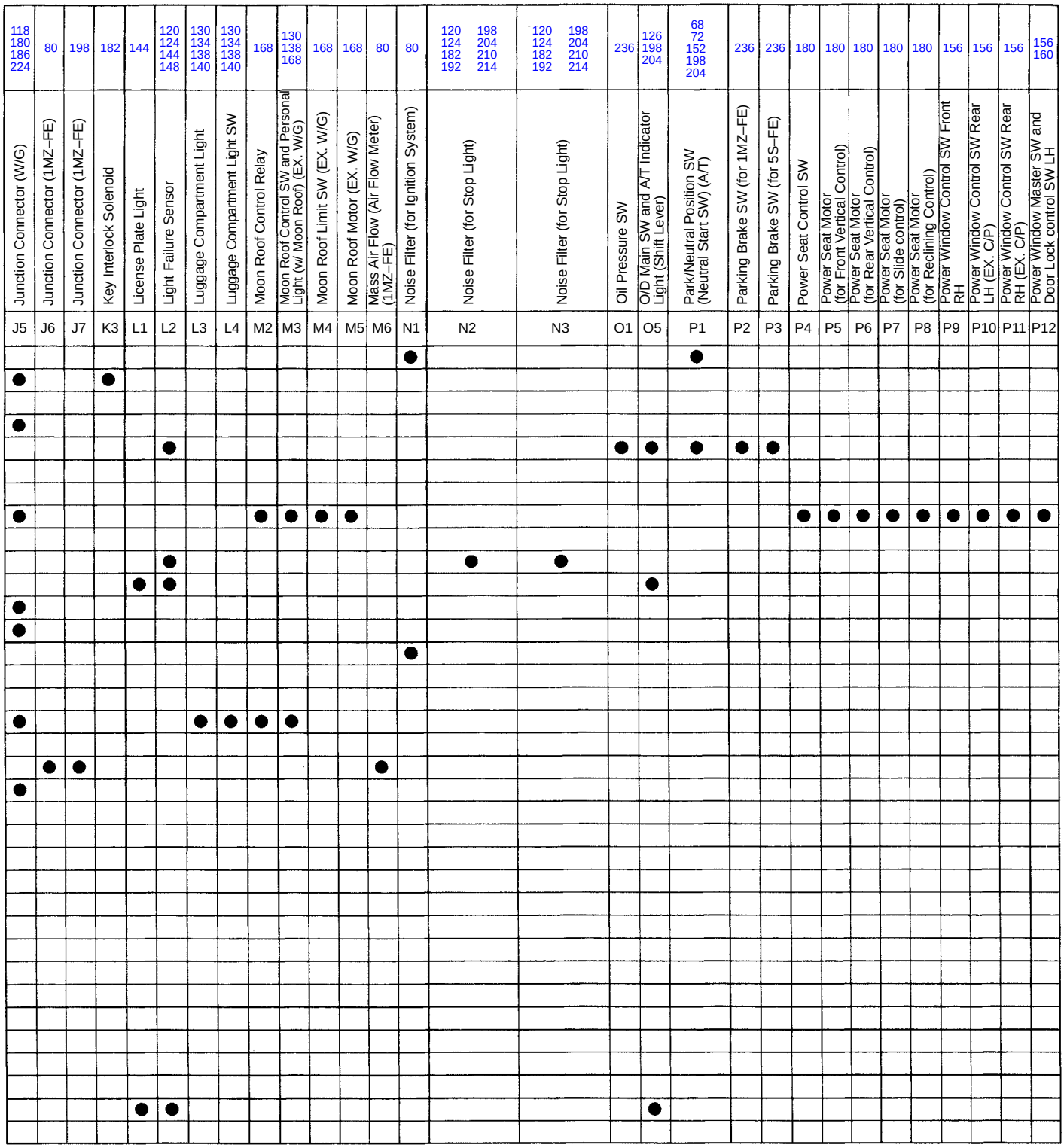

(4) : R/B No. 4 (See page25) (5) : R/B No. 5 (See page 26) (6) R/B No. 6 (See Page26)

POWER SOURCE (Current Flow Chart)

Location	CB or Fuse		*Page Nos. of Related Systems	156	156	156	156	242	126	126 222 224 228 234	126 190	154	126	120 124	144 148	114 148	120 124	144 148	152	120 124	144 148	114 118	144 148	120 124	152	190	190	190
			Parts	Power Window Motor Front LH	Power Window Motor Front RH	Power Window Motor Rear LH (EX. C/P)	Power Window Motor Rear RH (EX. C/P)	Radiator Fan Motor (5S–FE)	Radio and Player (w/ CD Player)	Radio and Player (w/o CD Player)	Rear Window Defogger SW	Remote Control mirror SW	Rheostat	Stop Light LH [Rear Comb. Light LH]	Taillight LH [Rear Comb. Light LH]	Rear Turn Signal Light LH [Rear Comb. Light LH]	Stop Light LH [Rear Comb. Light LH]	Taillight LH [Rear Comb. Light LH]	Back–up Light LH [Rear Comb. Light LH]	Stop Light RH [Rear Comb. Light RH]	Taillight RH [Rear Comb. Light RH]	Rear Turn Signal Light RH [Rear Comb. Light RH]	Taillight RH [Rear Comb. Light RH]	Stop Light RH [Rear Comb. Light RH]	Back–up Light RH [Rear Comb. Light RH]	Rear Window Defogger (+) (EX. W/G)	Rear Window Defogger (–) (EX. W/G)	Rear Window Defogger (–) (W/G)
			Code or Location	P13	P14	P15	P16	R1	R2	R3	R5	R6	R7	R8			R9			R10			R11				R16	R17	
①	40A	AM1																										
	15A	CIG/RADIO								●		●																
	40A	DEFOG																								●	●	●
	15A	ECU–1G																										
	10A	GAUGE									●								●						●			
	7.5A	IGN																										
	10A	MIR–HTR																										
	30A	POWER	●	●	●	●																						
	7.5A	SRS																										
	15A	STOP											●				●			●				●				
	15A	TAIL							●	●	●		●		●			●			●		●					
	7.5A	TURN														●						●						
	20A	WIPER																										
②	30A	AM2																										
	7.5A	ALT–S																										
	30A	CDS FAN						●																				
	20A	DOME								●																		
	15A	ECU–B																										
	15A	EFI																										
	10A	HAZ														●						●						
	15A	HEAD (LWR–LH)																										
	15A	HEAD (LWR–RH)																										
	15A	HEAD (UPR–LH)																										
	15A	HEAD (UPR–RH)																										
	15A	HEAD LH																										
	15A	HEAD RH																										
	10A	HORN																										
	40A	MAIN																										
	7.5A	OBD																										
③	10A	STARTER																										
④	10A	A/C																										
	40A	HEATER																										
⑦	7.5A	DRL																										
⑧	100A	ALT							●	●	●		●															
	60A	ABS																										

* These are the page numbers of the first page on which the related system is shown.
The part indicated is located somewhere in the system, not necessarily on the page indicated here.

[LOCATION] (1) : J/B No. 1 (See page 20) (2) : J/B No. 2 (See page 22) (3) : R/B No. 1 (See page 25)
(7) : R/B No. 7 (See page 27) (8) : Fuse Box (F10, F17 See on page 28 29)

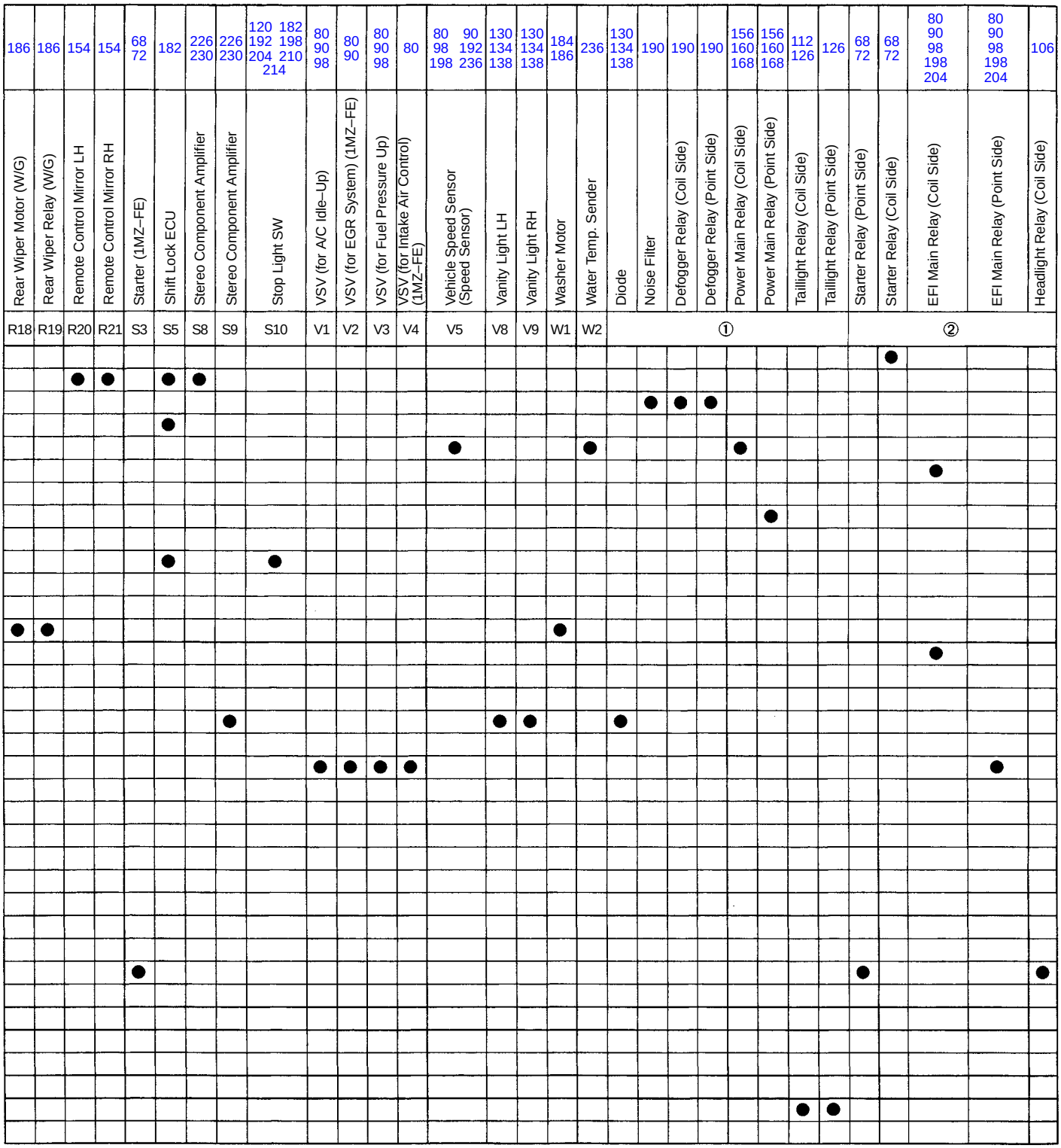

(4) : R/B No. 4 (See page25) (5) : R/B No. 5 (See page 26) (6) R/B No. 6 (See Page26)

POWER SOURCE (Current Flow Chart)

Location	CB or Fuse		*Page Nos. of Related Systems	173	106	242	242	114 118	246	246	242	242	242	246	246	80 90 98	80 90 98	106	106
			Parts	Horn Relay	Headlight Relay (Point Side)	Radiator Fan Relay (Point Side)	Radiator Fan Relay (Coil Side)	Turn Signal Flasher	Heater Relay (Point Side)	Heater Relay (Coil Side)	Radiator Fan Relay No. 2 (Coil Side)	Radiator Fan Relay No. 2 (Point Side)	Radiator Fan Relay No. 3 (Point Side)	A/C Magnetic Clutch Relay (Coil Side)	A/C Magnetic Clutch Relay (Point Side)	Circuit Opening Relay (Coil Side)	Circuit Opening Relay (Coil Side)	Daytime Running Light Relay No. 3 (Coil Side)	Daytime Running Light Relay No. 4 (Coil Side)
			Code or Location	②				③	④		⑤					⑥		⑦	
①	40A	AM1																	
	15A	CIG/RADIO																	
	40A	DEFOG																	
	15A	ECU–1G					●				●								
	10A	GAUGE								●				●	●				
	7.5A	IGN																	
	10A	MIR–HTR																	
	30A	POWER																	
	7.5A	SRS																	
	15A	STOP																	
	15A	TAIL																	
	7.5A	TURN						●											
	20A	WIPER																	
②	30A	AM2																	
	7.5A	ALT–S																	
	30A	CDS FAN				●						●	●						
	20A	DOME																	
	15A	ECU–B																	
	15A	EFI															●		
	10A	HAZ						●											
	15A	HEAD (LWR–LH)																	
	15A	HEAD (LWR–RH)																	
	15A	HEAD (UPR–LH)																	●
	15A	HEAD (UPR–RH)																●	
	15A	HEAD LH																	
	15A	HEAD RH																	
	10A	HORN		●															
	40A	MAIN			●													●	●
	7.5A	OBD																	
③	10A	STARTER														●			
④	10A	A/C																	
	40A	HEATER							●										
⑦	7.5A	DRL																●	●
⑧	100A	ALT																	
	60A	ABS																	

* These are the page numbers of the first page on which the related system is shown.
The part indicated is located somewhere in the system, not necessarily on the page indicated here.

[LOCATION] (1) : J/B No. 1 (See page 20) (2) : J/B No. 2 (See page 22) (3) : R/B No. 1 (See page 25)
(4) : R/B No. 4 (See page 25) (5) : R/B No. 5 (See page 26) (6) : R/B No. 6 (See page 26)
(7) : R/B No. 7 (See page 27) (8) : Fuse Box (F10, F17 See on page 28 29)

POWER SOURCE (Current Flow Chart)

-Memo

POWER SOURCE

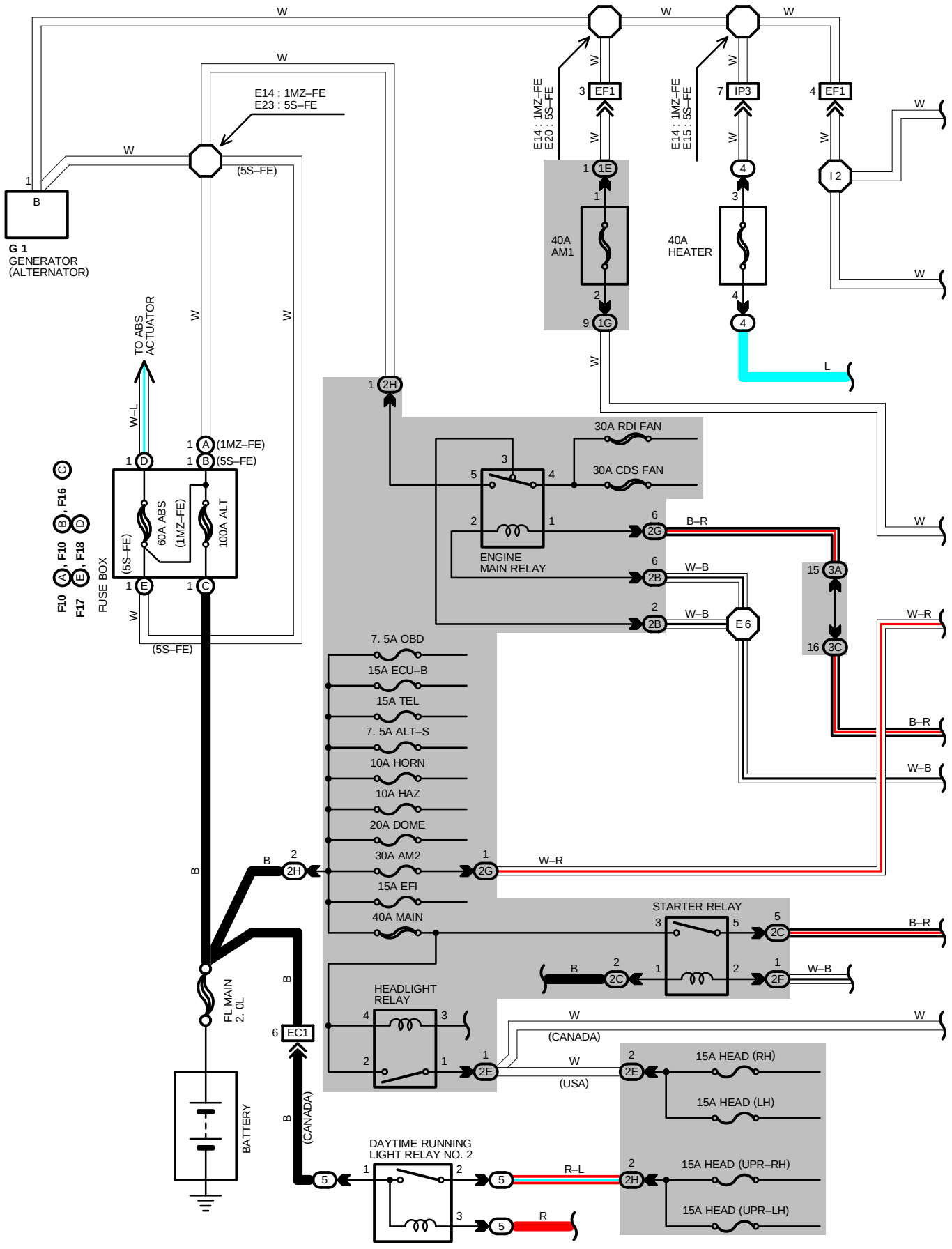

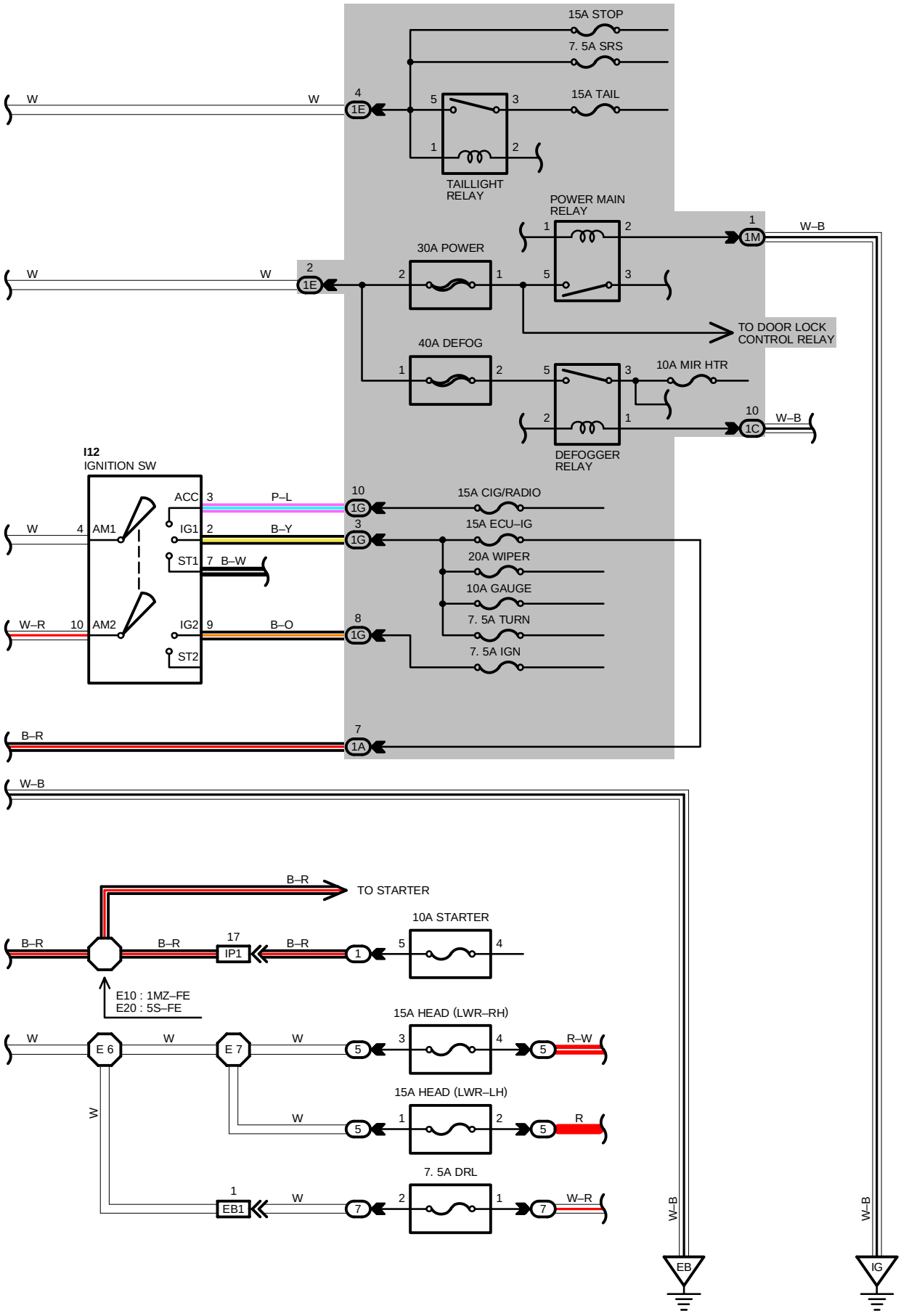
15A STOP
7. 5A SRS
15A TAIL
TAILLIGHT RELAY
POWER MAIN RELAY
30A POWER
TO DOOR LOCK CONTROL RELAY
40A DEFOG
10A MIR HTR
DEFOGGER RELAY
W–B
I12
IGNITION SW
ACC
IG1
ST1
AM1
AM2
IG2
ST2
P–L
B–Y
B–W
B–O
15A CIG/RADIO
15A ECU–IG
20A WIPER
10A GAUGE
7. 5A TURN
7. 5A IGN
B–R
TO STARTER
10A STARTER
IP1
E10 : 1MZ–FE
E20 : 5S–FE
E 6
E 7
15A HEAD (LWR–RH)
15A HEAD (LWR–LH)
R–W
R
7. 5A DRL
W–R
EB1
EB
IG

POWER SOURCE

SERVICE HINTS

TAILLIGHT RELAY

5–3 : CLOSED WITH LIGHT CONTROL SW AT **TAIL** OR **HEAD** POSITION
CLOSED WITH ENGINE RUNNING AND PARKING BRAKE LEVER RELEASED (CANADA)

ENGINE MAIN RELAY

4–5 : CLOSED WITH IGNITION SW AT **ON** OR **ST** POSITION

HEADLIGHT RELAY

2–1 : CLOSED WITH LIGHT CONTROL SW AT **HEAD** POSITION OR DIMMER SW AT **FLASH** POSITION
CLOSED WITH ENGINE RUNNING AND PARKING BRAKE LEVER RELEASED (CANADA)

I12 IGNITION SW

4–3 : CLOSED WITH IGNITION KEY AT **ACC** OR **ON** POSITION
10–9, 4–2 : CLOSED WITH IGNITION KEY AT **ON** OR **ST** POSITION

○ : PARTS LOCATION

CODE		SEE PAGE	CODE		SEE PAGE	CODE	SEE PAGE
F10	A	28	**F17**	E	28 (1MZ–FE), 30 (5S–FE)	**I 2**	33
	B	30	**F18**	D	28 (1MZ–FE), 30 (5S–FE)		
F16	C	28 (1MZ–FE), 30 (5S–FE)	**G 1**		28 (1MZ–FE), 30 (5S–FE)		

: RELAY BLOCKS

CODE	SEE PAGE	RELAY BLOCKS (RELAY BLOCK LOCATION)
1	25	R/B NO. 4 (LEFT KICK PANEL)
4	25	R/B NO. 4 (RIGHT KICK PANEL)
5	26	R/B NO. 5 (ENGINE COMPARTMENT LEFT)
7	27	R/B NO. 7 (NEAR THE BATTERY)

: JUNCTION BLOCK AND WIRE HARNESS CONNECTOR

CODE	SEE PAGE	JUNCTION BLOCK AND WIRE HARNESS (CONNECTOR LOCATION)
1A	20	COWL WIRE AND J/B NO. 1 (INSTRUMENT PANEL LEFT)
1C		
1E		
1G		
1M		
2B	22	ENGINE ROOM MAIN WIRE AND J/B NO. 2 (ENGINE COMPARTMENT LEFT)
2C	22	ENGINE WIRE AND J/B NO. 2 (ENGINE COMPARTMENT LEFT)
2E	22	ENGINE ROOM MAIN WIRE AND J/B NO. 2 (ENGINE COMPARTMENT LEFT)
2F	22	COWL WIRE AND J/B NO. 2 (ENGINE COMPARTMENT LEFT)
2G		
2H	22	ENGINE WIRE AND J/B NO. 2 (ENGINE COMPARTMENT LEFT)
3A	24	COWL WIRE AND J/B NO. 3 (BEHIND COMBINATION METER)
3C		

: CONNECTOR JOINING WIRE HARNESS AND WIRE HARNESS

CODE	SEE PAGE	JOINING WIRE HARNESS AND WIRE HARNESS (CONNECTOR LOCATION)
EB1	38 (1MZ–FE)	ENGINE ROOM MAIN WIRE AND RELAY WIRE
	40 (5S–FE)	
EC1	38 (1MZ–FE)	ENGINE WIRE AND ENGINE ROOM MAIN WIRE
	40 (5S–FE)	
EF1	38 (1MZ–FE)	ENGINE WIRE AND COWL WIRE
	40 (5S–FE)	
IP1	44	
IP3		

: GROUND POINTS

CODE	SEE PAGE	GROUND POINTS LOCATION
EB	38 (1MZ–FE)	FRONT LEFT FENDER
	40 (5S–FE)	
IG	42	INSTRUMENT PANEL BRACE LH

: SPLICE POINTS

CODE	SEE PAGE	WIRE HARNESS WITH SPLICE POINTS	CODE	SEE PAGE	WIRE HARNESS WITH SPLICE POINTS
E 6	38 (1MZ–FE)	ENGINE ROOM MAIN WIRE	**E14**	38 (1MZ–FE)	ENGINE WIRE
	40 (5S–FE)		**E15**	40 (5S–FE)	
E 7	38 (1MZ–FE)		**E20**		
	40 (5S–FE)		**E23**		
E10	38 (1MZ–FE)	ENGINE WIRE	**I 2**	44	COWL WIRE

(1MZ-FE) F10 Ⓐ

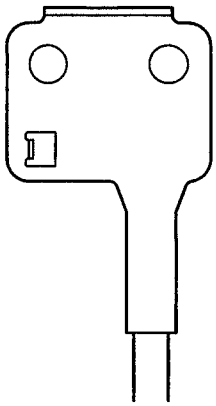

(5S-FE) F10 Ⓑ



F16 Ⓒ



(5S-FE) F17 Ⓔ



F18 Ⓓ



G 1



I12

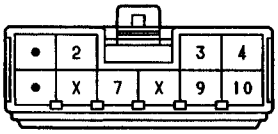

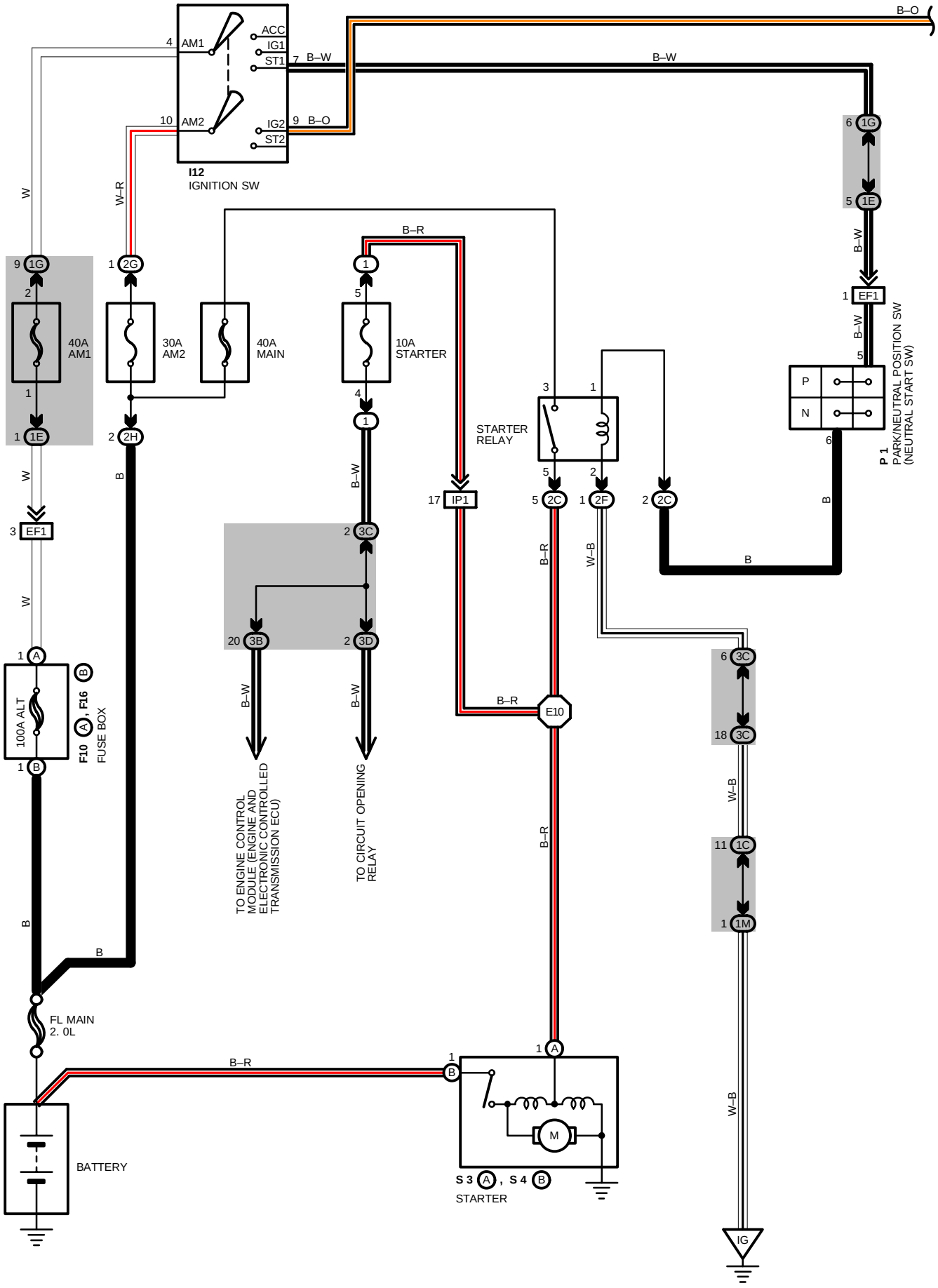
I12
IGNITION SW
ACC
IG1
ST1
IG2
ST2
AM1
AM2
B–O
B–W
W
W–R
B–R
B
W–B
40A AM1
30A AM2
40A MAIN
10A STARTER
STARTER RELAY
P
N
P 1
PARK/NEUTRAL POSITION SW (NEUTRAL START SW)
EF1
IP1
E10
100A ALT
F10 A, F16 B
FUSE BOX
TO ENGINE CONTROL MODULE (ENGINE AND ELECTRONIC CONTROLLED TRANSMISSION ECU)
TO CIRCUIT OPENING RELAY
FL MAIN 2. 0L
BATTERY
S 3 A, S 4 B
STARTER
M
IG

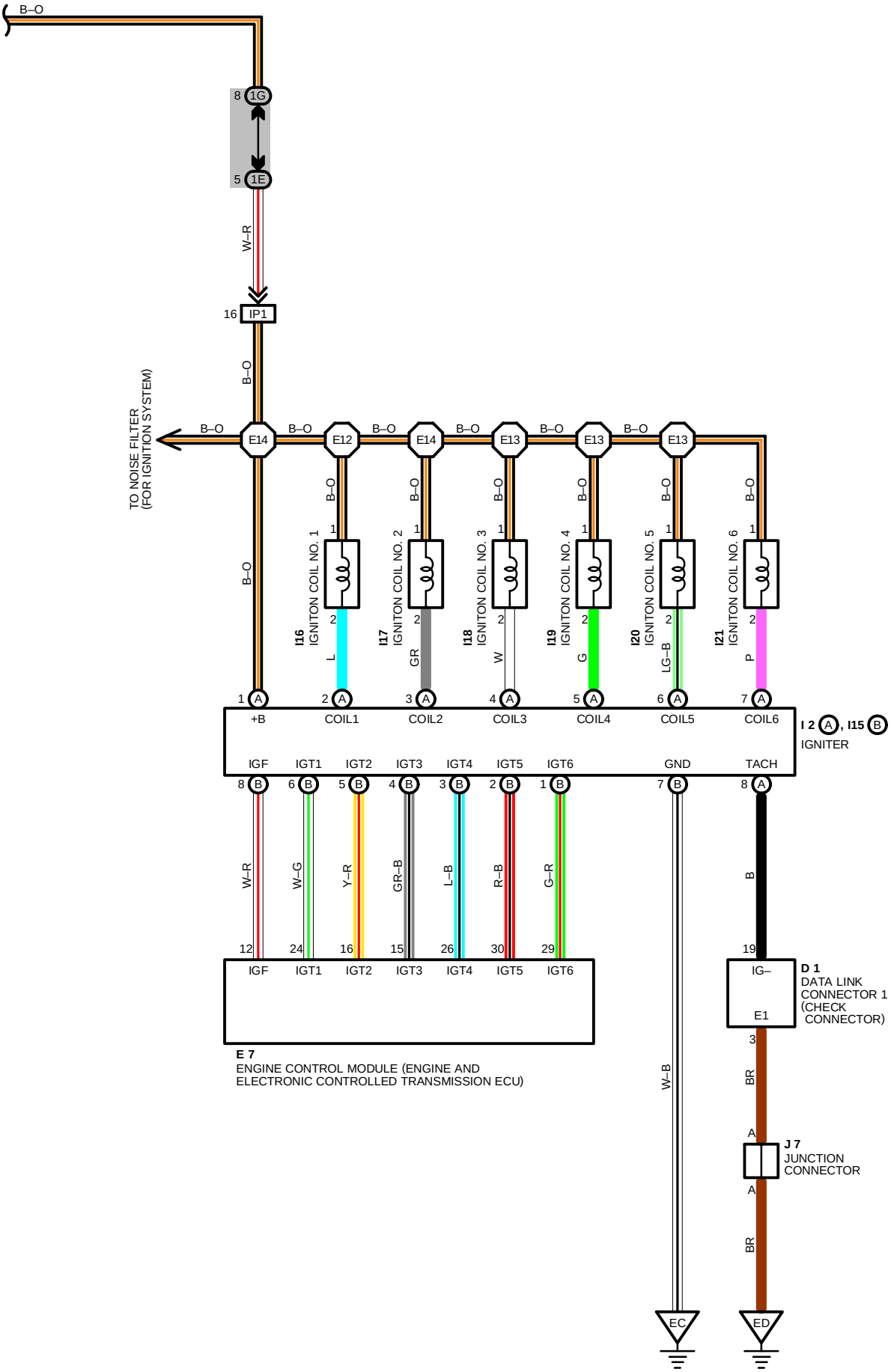
B–O
8 1G
5 1E
W–R
16 IP1
B–O
TO NOISE FILTER
(FOR IGNITION SYSTEM)
B–O
E14
B–O
E12
B–O
E14
B–O
E13
B–O
E13
B–O
E13
B–O
B–O
1
I16 IGNITON COIL NO. 1
2
L
I17 IGNITON COIL NO. 2
GR
I18 IGNITON COIL NO. 3
W
I19 IGNITON COIL NO. 4
G
I20 IGNITON COIL NO. 5
LG–B
I21 IGNITON COIL NO. 6
P
1 A +B
2 A COIL1
3 A COIL2
4 A COIL3
5 A COIL4
6 A COIL5
7 A COIL6
I 2 A, I15 B
IGNITER
IGF
IGT1
IGT2
IGT3
IGT4
IGT5
IGT6
GND
TACH
8 B
6 B
5 B
4 B
3 B
2 B
1 B
7 B
8 A
W–R
W–G
Y–R
GR–B
L–B
R–B
G–R
B
12
24
16
15
26
30
29
19
IGF
IGT1
IGT2
IGT3
IGT4
IGT5
IGT6
E 7
ENGINE CONTROL MODULE (ENGINE AND
ELECTRONIC CONTROLLED TRANSMISSION ECU)
W–B
IG–
E1
D 1
DATA LINK
CONNECTOR 1
(CHECK
CONNECTOR)
3
BR
A
J 7
JUNCTION
CONNECTOR
A
BR
EC
ED

STARTING AND IGNITION (1MZ–FE)

SERVICE HINTS

I12 IGNITION SW
4–7 : CLOSED WITH IGNITION SW AT **ST** POSITION
10–9 : CLOSED WITH IGNITION SW AT **ON** OR **ST** POSITION

STARTER RELAY
(6) 2– **(6)** 4 : CLOSED WITH CLUTCH START SW ON AND IGNITION SW AT **ST** POSITION (M/T)
CLOSED WITH IGNITION SW AT **ST** POSITION (A/T)

STARTER
POINTS CLOSED WITH CLUTCH START SW ON AND IGNITION SW AT **ST** POSITION

P 1 PARK/NEUTRAL POSITION SW (NEUTRAL START SW) (A/T)
2–3 : CLOSED WITH A/T SHIFT LEVER IN **P** OR **N** POSITION

○ : PARTS LOCATION

CODE	SEE PAGE	CODE	SEE PAGE	CODE	SEE PAGE
D 1	28	**I15** B	29	**I21**	29
E 7	32	**I16**	29	**J 7**	33
F10 A	28	**I17**	29	**P 1**	29
F16 B	28	**I18**	29	**S 3** A	29
I 2 A	29	**I19**	29	**S 4** B	29
I12	33	**I20**	29		

⬭ : RELAY BLOCKS

CODE	SEE PAGE	RELAY BLOCKS (RELAY BLOCK LOCATION)
1	25	R/B NO. 1 (LEFT KICK PANEL)

⬭ : JUNCTION BLOCK AND WIRE HARNESS CONNECTOR

CODE	SEE PAGE	JUNCTION BLOCK AND WIRE HARNESS (CONNECTOR LOCATION)
1C	20	COWL WIRE AND J/B NO. 1 (INSTRUMENT PANEL LEFT)
1E		
1G		
1M		
2C	22	ENGINE WIRE AND J/B NO. 2 (ENGINE COMPARTMENT LEFT)
2G	22	COWL WIRE AND J/B NO. 2 (ENGINE COMPARTMENT LEFT)
2H	22	ENGINE WIRE AND J/B NO. 2 (ENGINE COMPARTMENT LEFT)
2F	22	COWL WIRE AND J/B NO. 2 (ENGINE COMPARTMENT LEFT)
3C	24	COWL WIRE AND J/B NO. 3 (BEHIND COMBINATION METER)

▭ : CONNECTOR JOINING WIRE HARNESS AND WIRE HARNESS

CODE	SEE PAGE	JOINING WIRE HARNESS AND WIRE HARNESS (CONNECTOR LOCATION)
EF1	38 (1MZ–FE)	ENGINE WIRE AND COWL WIRE
	40 (5S–FE)	
IP1	44	

▽ : GROUND POINTS

CODE	SEE PAGE	GROUND POINTS LOCATION
EC	38 (1MZ–FE)	INTAKE MANIFOLD RH
	40 (5S–FE)	
ED	38 (1MZ–FE)	INTAKE MANIFOLD LH
	40 (5S–FE)	
IG	42	INSTRUMENT PANEL BRACE LH

⯃ : SPLICE POINTS

CODE	SEE PAGE	WIRE HARNESS WITH SPLICE POINTS	CODE	SEE PAGE	WIRE HARNESS WITH SPLICE POINTS
E10	38 (1MZ–FE)	ENGINE WIRE	**E13**	38 (1MZ–FE)	ENGINE WIRE
E12			**E14**		

D 1 BLACK

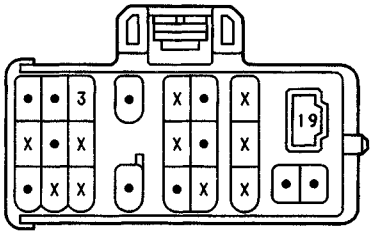

E 7 DARK GRAY

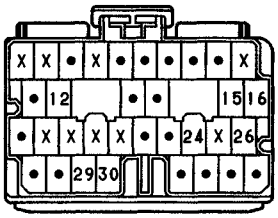

F10 (A)

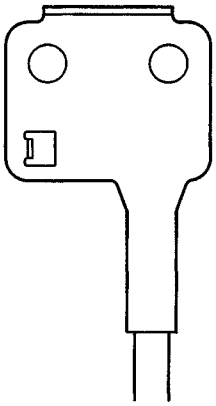

F16 (B)



I 2 (A) DARK GRAY

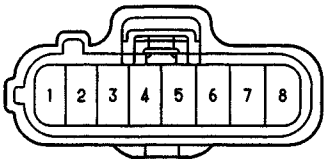

I12

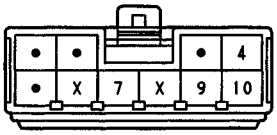

I15 (B) BLACK

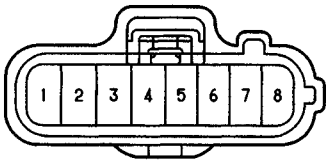

I16, I17, I18, I19, I20, I21 BLACK

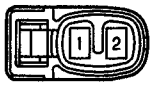

J 7 BLUE

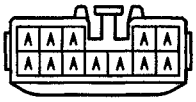

(HINT:SEE PAGE 7)

P 1 GRAY

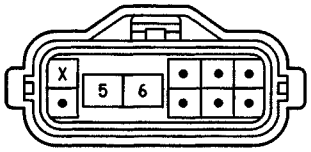

S 3 (A) BLACK



S 4 (B)

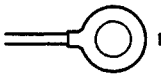

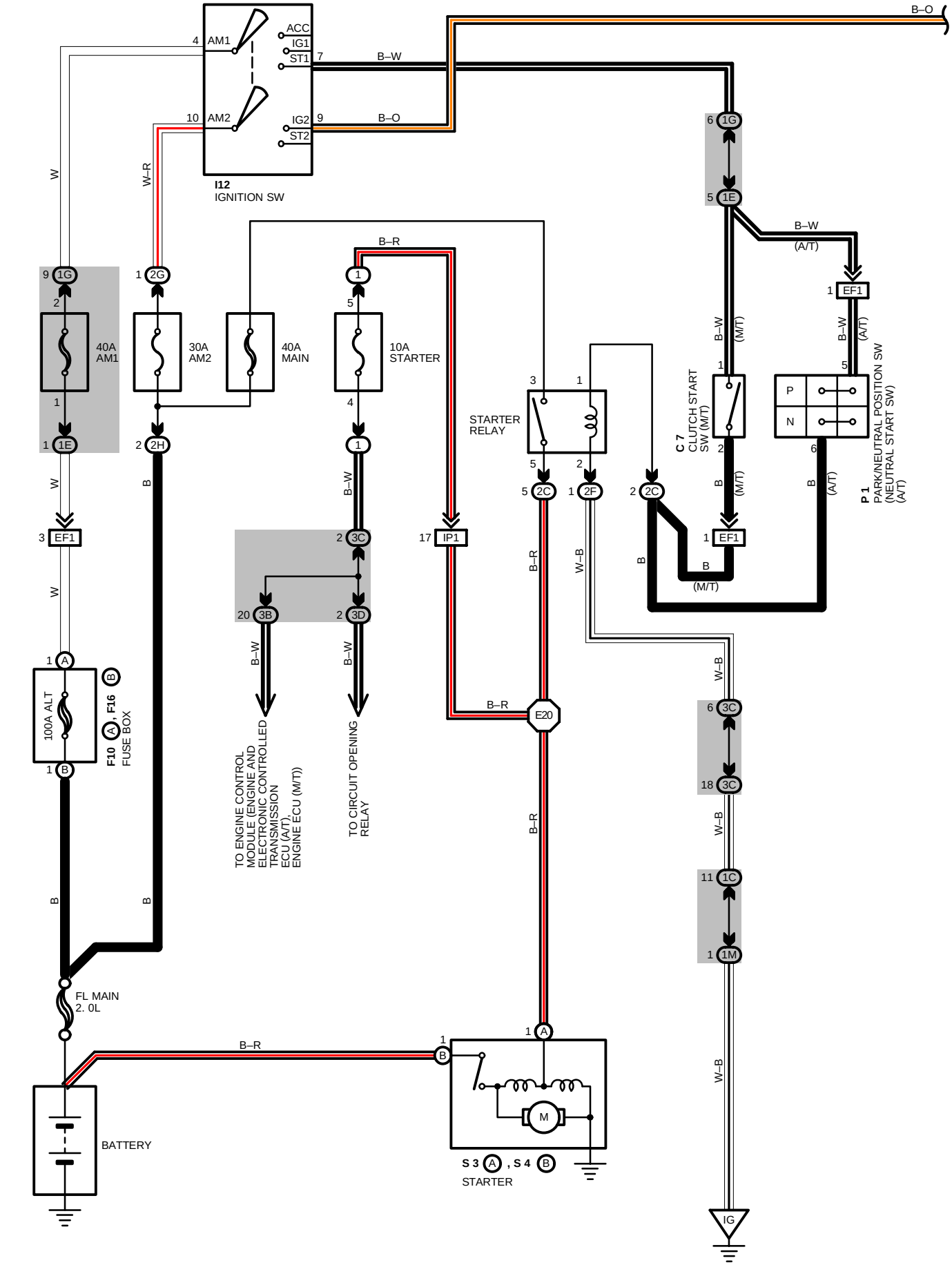
B–O
I12
IGNITION SW
ACC
IG1
ST1
IG2
ST2
AM1
AM2
B–W
B–O
W
W–R
B–R
40A
AM1
30A
AM2
40A
MAIN
10A
STARTER
STARTER
RELAY
B–W
(A/T)
B–W
(M/T)
B–W
(A/T)
C 7
CLUTCH START
SW (M/T)
P 1
PARK/NEUTRAL POSITION SW
(NEUTRAL START SW)
(A/T)
(M/T)
W–B
100A ALT
F10 , F16
FUSE BOX
TO ENGINE CONTROL
MODULE (ENGINE AND
ELECTRONIC CONTROLLED
TRANSMISSION
ECU (A/T),
ENGINE ECU (M/T))
TO CIRCUIT OPENING
RELAY
FL MAIN
2. 0L
BATTERY
S 3 , S 4
STARTER
IG

*1 : CALIFORNIA
*2 : EX. CALIFORNIA
*3 : ONE BODY ASSEMBLY EX. CALIFORNIA

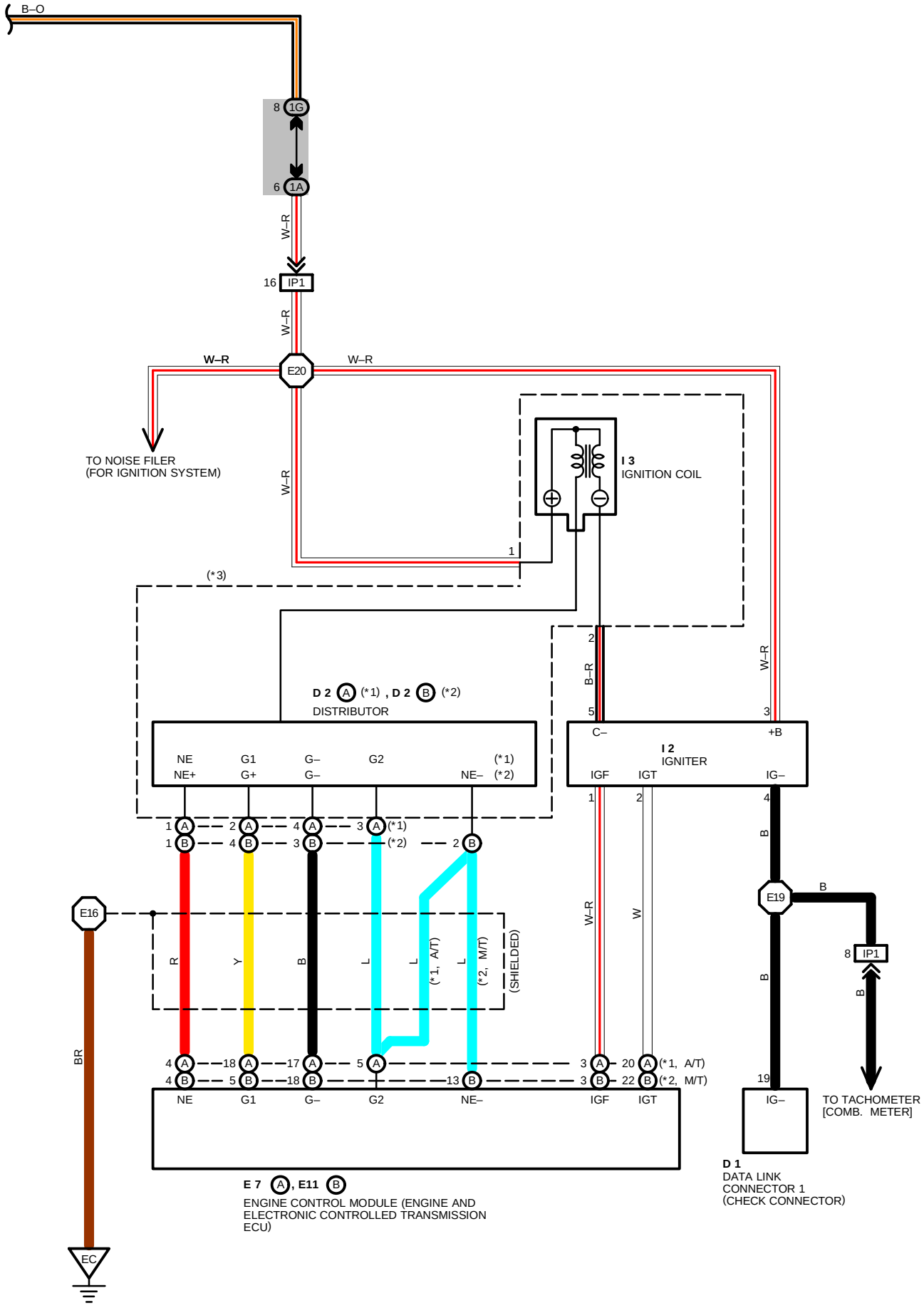

STARTING AND IGNITION (5S–FE)

SERVICE HINTS

I12 IGNITION SW
4–7 : CLOSED WITH IGNITION SW AT **ST** POSITION
10–9 : CLOSED WITH IGNITION SW AT **ON** OR **ST** POSITION

C 7 CLUTCH START SW (M/T)
1–2 : CLOSED WITH CLUTCH PEDAL FULLY DEPRESSED

STARTER RELAY
(6) 2– **(6)** 4 : CLOSED WITH CLUTCH START SW ON AND IGNITION SW AT **ST** POSITION (M/T)
CLOSED WITH IGNITION SW AT **ST** POSITION (A/T)

STARTER
POINTS CLOSED WITH CLUTCH START SW ON AND IGNITION SW AT **ST** POSITION

P 1 PARK/NEUTRAL POSITION SW (NEUTRAL START SW) (A/T)
2–3 : CLOSED WITH A/T SHIFT LEVER IN **P** OR **N** POSITION

○ : PARTS LOCATION

CODE		SEE PAGE	CODE		SEE PAGE	CODE		SEE PAGE
C 7		32	**E11**	B	32	**I12**		33
D 1		30	**F10**	A	30	**P 1**		31
D 2	A	30	**F16**	B	30	**S 3**	A	31
	B	30	**I 2**		31	**S 4**	B	31
E 7	A	32	**I 3**		31			

: RELAY BLOCKS

CODE	SEE PAGE	RELAY BLOCKS (RELAY BLOCK LOCATION)
1	25	R/B NO. 1 (LEFT KICK PANEL)

: JUNCTION BLOCK AND WIRE HARNESS CONNECTOR

CODE	SEE PAGE	JUNCTION BLOCK AND WIRE HARNESS (CONNECTOR LOCATION)
1A	20	COWL WIRE AND J/B NO. 1 (INSTRUMENT PANEL LEFT)
1C		
1E		
1G		
1M		
2C	22	ENGINE WIRE AND J/B NO. 2 (ENGINE COMPARTMENT LEFT)
2F	22	COWL WIRE AND J/B NO. 2 (ENGINE COMPARTMENT LEFT)
2G		
2H	22	ENGINE WIRE AND J/B NO. 2 (ENGINE COMPARTMENT LEFT)
3B	24	COWL WIRE AND J/B NO. 3 (BEHIND COMBINATION METER)
3C		
3D		

: CONNECTOR JOINING WIRE HARNESS AND WIRE HARNESS

CODE	SEE PAGE	JOINING WIRE HARNESS AND WIRE HARNESS (CONNECTOR LOCATION)
EF1	38 (1MZ–FE)	ENGINE WIRE AND COWL WIRE
	40 (5S–FE)	
IP1	44	

: GROUND POINTS

CODE	SEE PAGE	GROUND POINTS LOCATION
EC	38 (1MZ–FE)	INTAKE MANIFOLD RH
	40 (5S–FE)	
IG	42	INSTRUMENT PANEL BRACE LH

: SPLICE POINTS

CODE	SEE PAGE	WIRE HARNESS WITH SPLICE POINTS	CODE	SEE PAGE	WIRE HARNESS WITH SPLICE POINTS
E16	40 (5S–FE)	ENGINE WIRE	**E20**	40 (5S–FE)	ENGINE WIRE
E19					

C 7

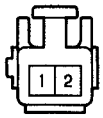

D 1 BLACK

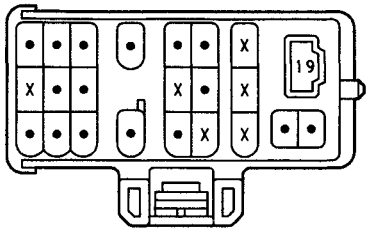

(CALIFORNIA) D 2 (A) BLACK
(EX. CALIFORNIA) D 2 (B) BLACK

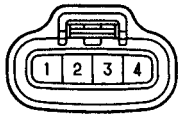

E 7 (A), E11 (B) DARK GRAY

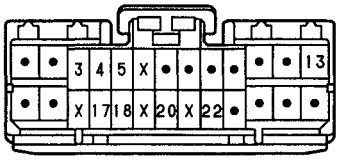

F10 (A)



F16 (B)

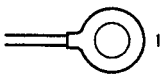

I 2 BLACK

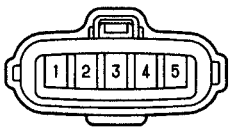

(CALIFORNIA) I 3 BLACK

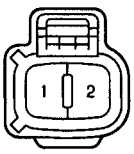

(EX. CALIFORNIA) I 3 BLACK



I12

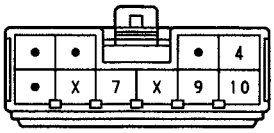

P 1 GRAY

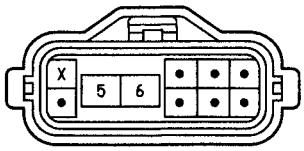

S 3 (A) BLACK



S 4 (B)

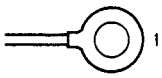

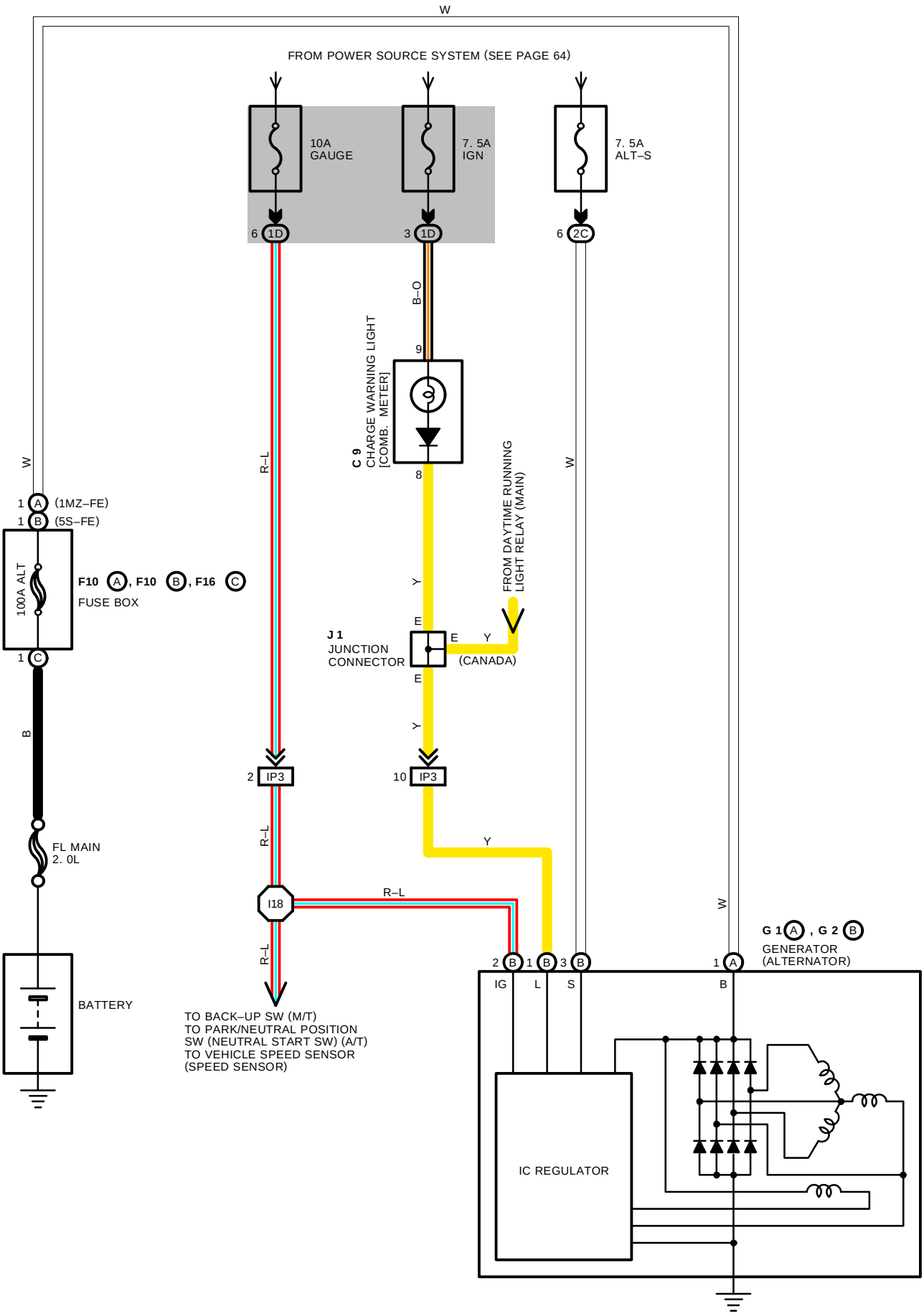
W
FROM POWER SOURCE SYSTEM (SEE PAGE 64)
10A
GAUGE
7. 5A
IGN
7. 5A
ALT–S
6 1D
3 1D
6 2C
B–O
9
C 9
CHARGE WARNING LIGHT
[COMB. METER]
8
R–L
W
FROM DAYTIME RUNNING
LIGHT RELAY (MAIN)
Y
E
J 1
JUNCTION
CONNECTOR
E
Y
(CANADA)
E
Y
1 A (1MZ–FE)
1 B (5S–FE)
100A ALT
F10 A, F10 B, F16 C
FUSE BOX
1 C
B
FL MAIN
2. 0L
BATTERY
2 IP3
10 IP3
R–L
Y
I18
R–L
R–L
TO BACK–UP SW (M/T)
TO PARK/NEUTRAL POSITION
SW (NEUTRAL START SW) (A/T)
TO VEHICLE SPEED SENSOR
(SPEED SENSOR)
W
G 1 A , G 2 B
GENERATOR
(ALTERNATOR)
2 B 1 B 3 B
1 A
IG
L
S
B
IC REGULATOR

SERVICE HINTS

G 1(B) GENERATOR (ALTERNATOR)

(B) 3–GROUND : **13.9–15.1** VOLTS WITH ENGINE RUNNING AT **2000** RPM AND **25**˚C (**77**˚F)
13.5–14.3 VOLTS WITH ENGINE RUNNING AT **2000** RPM AND **115**˚C (**239**˚F)
(B) 1–GROUND : **0–4** VOLTS WITH IGNITION SW AT **ON** POSITION AND ENGINE NOT RUNNING

: PARTS LOCATION

CODE		SEE PAGE	CODE		SEE PAGE	CODE	SEE PAGE
C 9		32	**F16**	C	28 (1MZ–FE), 30 (5S–FE)	**J 1**	33
F10	A	28 (1MZ–FE), 30 (5S–FE)	**G 1**	A	28 (1MZ–FE), 30 (5S–FE)		
	B	28 (1MZ–FE), 30 (5S–FE)	**G 2**	B	28 (1MZ–FE), 30 (5S–FE)		

: JUNCTION BLOCK AND WIRE HARNESS CONNECTOR

CODE	SEE PAGE	JUNCTION BLOCK AND WIRE HARNESS (CONNECTOR LOCATION)
1D	20	COWL WIRE AND J/B NO. 1 (INSTRUMENT PANEL LEFT)
2C	22	ENGINE WIRE AND J/B NO. 2 (ENGINE COMPARTMENT LEFT)

: CONNECTOR JOINING WIRE HARNESS AND WIRE HARNESS

CODE	SEE PAGE	JOINING WIRE HARNESS AND WIRE HARNESS (CONNECTOR LOCATION)
IP3	44	ENGINE WIRE AND COWL WIRE

: SPLICE POINTS

CODE	SEE PAGE	WIRE HARNESS WITH SPLICE POINTS	CODE	SEE PAGE	WIRE HARNESS WITH SPLICE POINTS
I18	44	ENGINE WIRE			

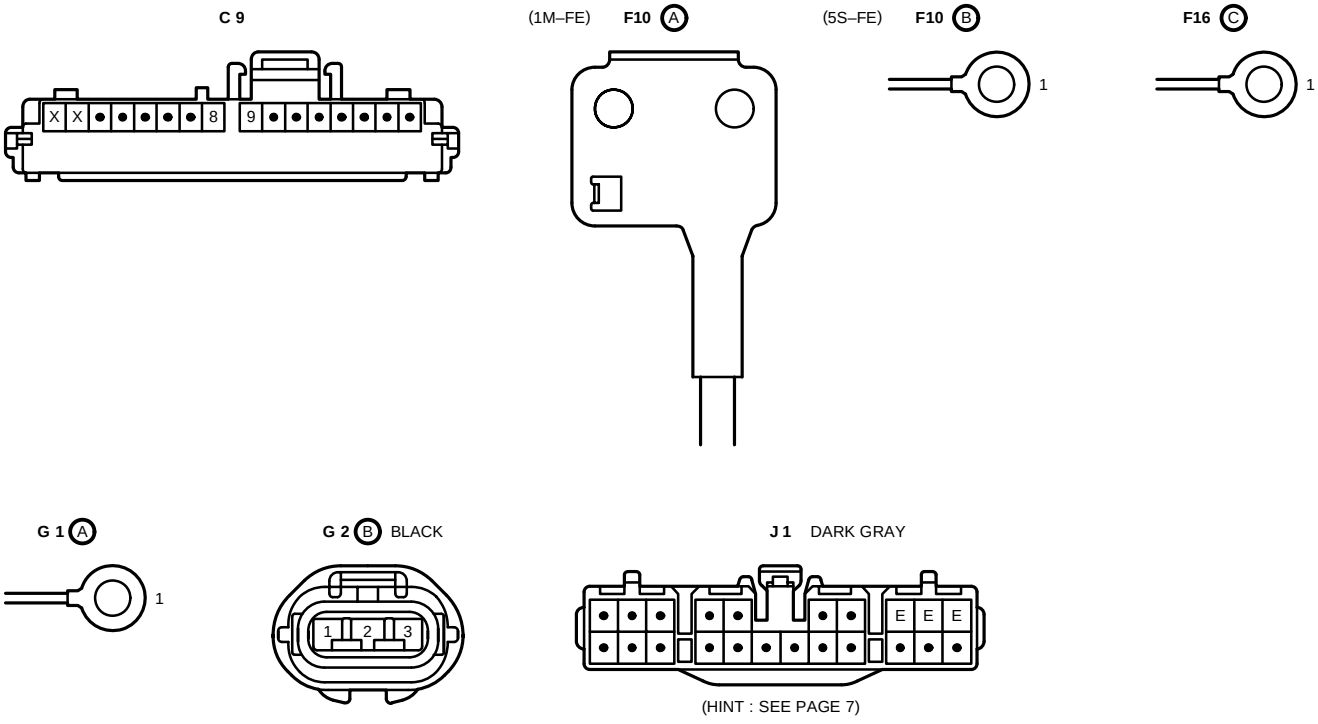

(HINT : SEE PAGE 7)

SYSTEM OUTLINE

THIS SYSTEM UTILIZES AN ENGINE CONTROL MODULE (ENGINE AND ELECTRONIC CONTROLLED TRANSMISSION ECU) AND MAINTAINS OVERALL CONTROL OF THE ENGINE, TRANSMISSION AND SO ON. AN OUTLINE OF THE ENGINE CONTROL IS EXPLAINED HERE.

1. INPUT SIGNALS

(1) ENGINE COOLANT TEMP. (WATER TEMP.) SIGNAL CIRCUIT
THE ENGINE COOLANT TEMP. SENSOR (WATER TEMP. SENSOR) DETECTS THE ENGINE COOLANT TEMP. AND HAS A BUILT–IN THERMISTOR WITH A RESISTANCE WHICH VARIES ACCORDING TO THE WATER TEMP. IS INPUT INTO **TERMINAL THW** OF ENGINE CONTROL MODULE (ECU) AS A CONTROL SIGNAL.

(2) INTAKE AIR TEMP. SIGNAL CIRCUIT
THE INTAKE AIR TEMP. SENSOR IS INSTALLED IN THE MASS AIR FLOW (AIR FLOW METER) AND DETECTS THE INTAKE AIR TEMP., WHICH IS INPUT AS A CONTROL SIGNAL TO **TERMINAL THA** OF ENGINE CONTROL MODULE (ECU).

(3) OXYGEN SENSOR SIGNAL SYSTEM
THE OXYGEN DENSITY IN THE EXHAUST GASES IS DETECTED AND INPUT AS A CONTROL SIGNAL TO **TERMINAL OXL, OXR** AND **OXS** OF THE ENGINE CONTROL MODULE (ECU). TO MAINTAIN STABLE DETECTION PERFORMANCE BY THE OXYGEN SENSOR, A HEATER IS USED FOR WARMING THE SENSOR. THE HEATER IS ALSO CONTROLLED BY THE ENGINE CONTROL MODULE (ECU) **(HTL, HTR** AND **HTS**).

(4) RPM SIGNAL SYSTEM
CAMSHAFT POSITION AND CRANKSHAFT POSITION ARE DETECTED BY THE CAMSHAFT POSITION SENSOR AND CRANKSHAFT POSITION SENSOR. CRANKSHAFT POSITION IS INPUT AS A CONTROL SIGNAL TO **TERMINAL G22+** OF THE ENGINE CONTROL MODULE (ECU), AND ENGINE RPM IS INPUT TO **TERMINAL NE+**.

(5) THROTTLE SIGNAL CIRCUIT
THE THROTTLE POSITION SENSOR DETECTS THE THROTTLE VALVE OPENING ANGLE AS A CONTROL SIGNAL, WHICH IS INPUT INTO **TERMINAL VTA** OF THE ENGINE CONTROL MODULE (ECU). WHEN THE VALVE IS COMPLETELY CLOSED, THE CONTROL SIGNAL IS INPUT INTO **TERMINAL IDL**.

(6) VEHICLE SPEED SIGNAL SYSTEM
THE VEHICLE SPEED SENSOR (SPEED SENSOR), INSTALLED INSIDE THE COMBINATION METER, DETECTS THE VEHICLE SPEED AND INPUTS A CONTROL SIGNAL TO **TERMINAL SP1** OF THE ENGINE CONTROL MODULE (ECU).

(7) PARK/NEUTRAL POSITION SW (NEUTRAL START SW) SIGNAL SYSTEM
THE PARK/NEUTRAL POSITION SW (NEUTRAL START SW) DETECTS WHETHER THE SHIFT POSITION IS IN NEUTRAL OR PARKING OR NOT, AND INPUTS A CONTROL SIGNAL TO **TERMINAL NSW** OF THE ENGINE CONTROL MODULE (ECU).

(8) A/C SW SIGNAL SYSTEM
THE A/C AMPLIFIER INPUTS THE A/C OPERATIONS TO **TEMRINAL A/C** OF THE ENGINE CONTROL MODULE (ECU) AS A CONTROL SIGNAL.

(9) BATTERY SIGNAL CIRCUIT
VOLTAGE IS CONSTANTLY APPLIED TO **TERMINAL BATT** OF THE ENGINE CONTROL MODULE (ECU). WHEN THE IGNITION SW TURNED ON, VOLTAGE FOR ENGINE CONTROL MODULE (ECU) START–UP POWER SUPPLY IS APPLIED TO **TERMINALS +B** AND **+B1** OF ENGINE CONTROL MODULE (ECU) VIA EFI MAIN RELAY.

(10) INTAKE AIR VOLUME SIGNAL CIRCUIT
INTAKE AIR VOLUME IS DETECTED BY THE MASS AIR FLOW (AIR FLOW METER) AND THE SIGNAL IS INPUT TO **TERMINAL VG** OF THE ENGINE CONTROL MODULE (ECU). AS A CONTROL SIGNAL.

(11) STA SIGNAL CIRCUIT
TO CONFIRM WHETHER THE ENGINE IS CRANKING, THE VOLTAGE APPLIED TO THE STARTER MOTOR DURING CRANKING IS DETECTED AND THE SIGNAL IS INPUT INTO **TERMINAL STA** OF THE ENGINE CONTROL MODULE (ECU) AS A CONTROL SIGNAL.

(12) ENGINE KNOCK SIGNAL CIRCUIT
ENGINE KNOCKING IS DETECTED BY THE KNOCK SENSOR NO. 1 AND NO. 2 AND THE SIGNALS ARE INPUT INTO **TERMINALS KNKR** AND **KNKL** AS A CONTROL SIGNAL.

2. CONTROL SYSTEM

* SFI (SEQUENTIAL MULTIPORT FUEL INJECTION) (EFI (ELECTRONIC FUEL INJECTION) SYSTEM

  THE EFI SYSTEM MONITORS THE ENGINE CONDITION THROUGH THE SIGNALS INPUT FROM EACH SENSOR (INPUT SIGNALS FROM (1) TO (12) ETC.). THE BEST FUEL INJECTION VOLUME IS DECIDED BASED ON THIS DATA AND THE PROGRAM MEMORIZED BY THE ENGINE CONTROL MODULE (ECU), AND THE CONTROL SIGNAL IS OUTPUT TO **TERMINALS #10, #20, #30, #40, #50** AND **#60** OF THE ENGINE CONTROL MODULE (ECU) TO OPERATE THE INJECTOR (INJECT THE FUEL). THE EFI SYSTEM PRODUCES CONTROL OF FUEL INJECTION OPERATION BY THE ENGINE CONTROL MODULE (ECU) IN RESPONSE TO THE DRIVING CONDITIONS.

* ESA (ELECTRONIC SPARK ADVANCE) SYSTEM

  THE ESA SYSTEM MONITORS THE ENGINE CONDITION THROUGH THE SIGNALS INPUT TO THE ENGINE CONTROL MODULE (ECU) FROM EACH SENSOR (INPUT SIGNALS FROM (1), (3), (4) TO (12) ETC.). THE BEST IGNITION TIMING IS DECIDED ACCORDING TO THIS DATA AND THE MEMORIZED DATA IN THE ENGINE CONTROL MODULE (ECU) AND THE CONTROL SIGNAL IS OUTPUTS TO **TERMINALS IGT1, IGT2, IGT3, IGT4, IGT5** AND **IGT6**. THIS SIGNAL CONTROLS THE IGNITER TO PROVIDE THE BEST IGNITION TIMING FOR THE DRIVING CONDITIONS.

* HEATED OXYGEN SENSOR (OXYGEN SENSOR) HEATER CONTROL SYSTEM

  THE OXYGEN SENSOR HEATER CONTROL SYSTEM TURNS THE HEATER ON WHEN THE INTAKE AIR VOLUME IS LOW (TEMP. OF EXHAUST EMISSIONS IS LOW), AND WARMS UP THE OXYGEN SENSOR (NO. 1 AND NO. 2) TO IMPROVE DETECTION PERFORMANCE OF THE SENSOR.

  THE ENGINE CONTROL MODULE (ECU) EVALUATES THE SIGNALS FROM EACH SENSOR (INPUT SIGNALS FROM (1), (4), (9) TO (10) ETC.), AND OUTPUT CURRENT TO **TERMINALS HTL, HTR** AND **HTS** AND CONTROL THE HEATER.

* IAC (IDLE AIR CONTROL (ISC)) SYSTEM

  THE IAC (ISC) SYSTEM (ROTARY SOLENOID TYPE) INCREASES THE RPM AND PROVIDES IDLE STABILITY FOR FAST IDLE–UP WHEN THE ENGINE IS COLD, AND WHEN THE IDLE SPEED HAS DROPPED DUE TO ELECTRICAL LOAD AND SO ON, THE ENGINE CONTROL MODULE (ECU) EVALUATES THE SIGNALS FROM EACH SENSOR (INPUT SIGNALS FROM (1), (4), (5), (8), (9) ETC.), OUTPUTS CURRENT TO **TERMINALS RSO** AND **RSC** TO CONTROL IDLE AIR CONTROL VALVE.

* EGR CONTROL SYSTEM

  THE EGR CONTROL SYSTEM DETECTS THE SIGNAL FROM EACH SENSOR (INPUT SIGNALS FROM (1), (4), (9), (10), ETC)., AND OUTPUTS CURRENT TO **TERMINAL EGR** TO CONTROL THE EGR VALVE.

* ACIS (ACOUSTIC CONTROL INDUCTION SYSTEM)

  ACIS INCLUDES A VALVE IN THE BULKHEAD SEPARATING THE SURGE TANK INTO TWO PARTS. THIS VALVE IS OPENED AND CLOSED IN ACCORDANCE WITH THE DRIVING CONDITIONS TO CONTROL THE INTAKE MANIFOLD LENGTH IN TWO STAGES FOR INCREASED ENGINE OUTPUT IN ALL RANGES FROM LOW TO HIGH SPEEDS.

  THE ENGINE CONTROL MODULE (ECU) JUDGES THE ENGINE SPEED BY THE SIGNALS ((4), (5)) FROM EACH SENSOR AND OUTPUTS SIGNALS TO THE **TERMINAL ACIS** TO CONTROL THE VSV (FOR OPENING AND CLOSING THE INTAKE CONTROL VALVE)

3. DIAGNOSIS SYSTEM

WITH THE DIAGNOSIS SYSTEM, WHEN THERE IS A MALFUNCTION IN THE ENGINE CONTROL MODULE (ECU) SIGNAL SYSTEM, THE MALFUNCTIONING SYSTEM IS RECORDED IN THE MEMORY.

4. FAIL–SAFE SYSTEM

WHEN A MALFUNCTION HAS OCCURRED IN ANY SYSTEM, IF THERE IS A POSSIBILITY OF ENGINE TROUBLE BEING CAUSED BY CONTINUED CONTROL BASED ON THE SIGNALS FROM THAT SYSTEM, THE FAIL–SAFE SYSTEM EITHER CONTROLS THE SYSTEM BY USING DATA (STANDARD VALUES) RECORDED IN THE ENGINE CONTROL MODULE (ECU) MEMORY OR ELSE STOPS THE ENGINE.

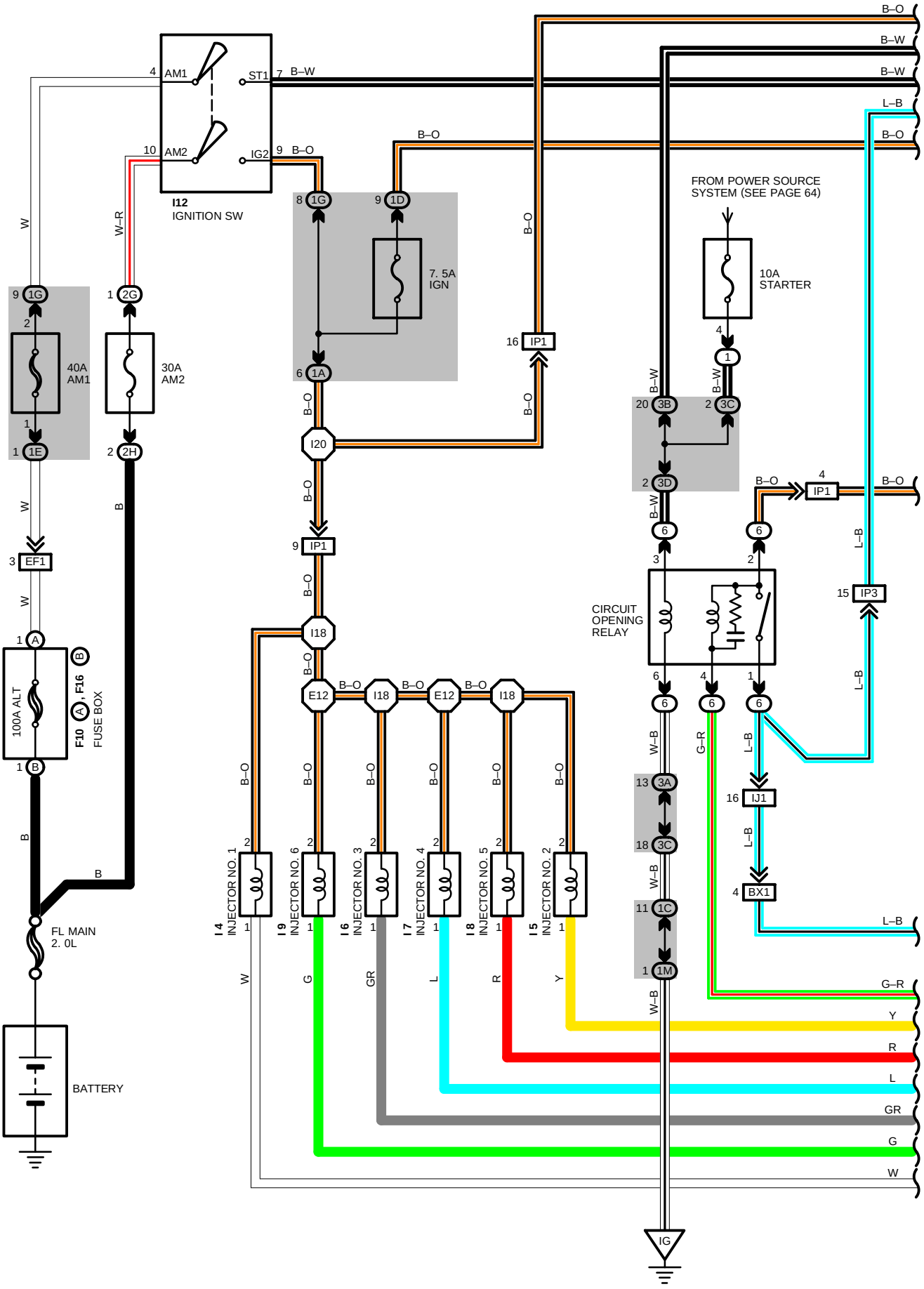
I12
IGNITION SW
AM1
AM2
ST1
IG2
7. 5A
IGN
40A
AM1
30A
AM2
10A
STARTER
FROM POWER SOURCE
SYSTEM (SEE PAGE 64)
CIRCUIT
OPENING
RELAY
100A ALT
F10 (A), F16 (B)
FUSE BOX
FL MAIN
2. 0L
BATTERY
EF1
IP1
IP3
IJ1
BX1
I20
I18
E12
1E
2H
1G
2G
1D
1A
3B
3C
3D
3A
1C
1M
INJECTOR NO. 1
INJECTOR NO. 6
INJECTOR NO. 3
INJECTOR NO. 4
INJECTOR NO. 5
INJECTOR NO. 2
IG
B–O
B–W
L–B
W
W–R
B
W–B
G–R
G
GR
L
R
Y

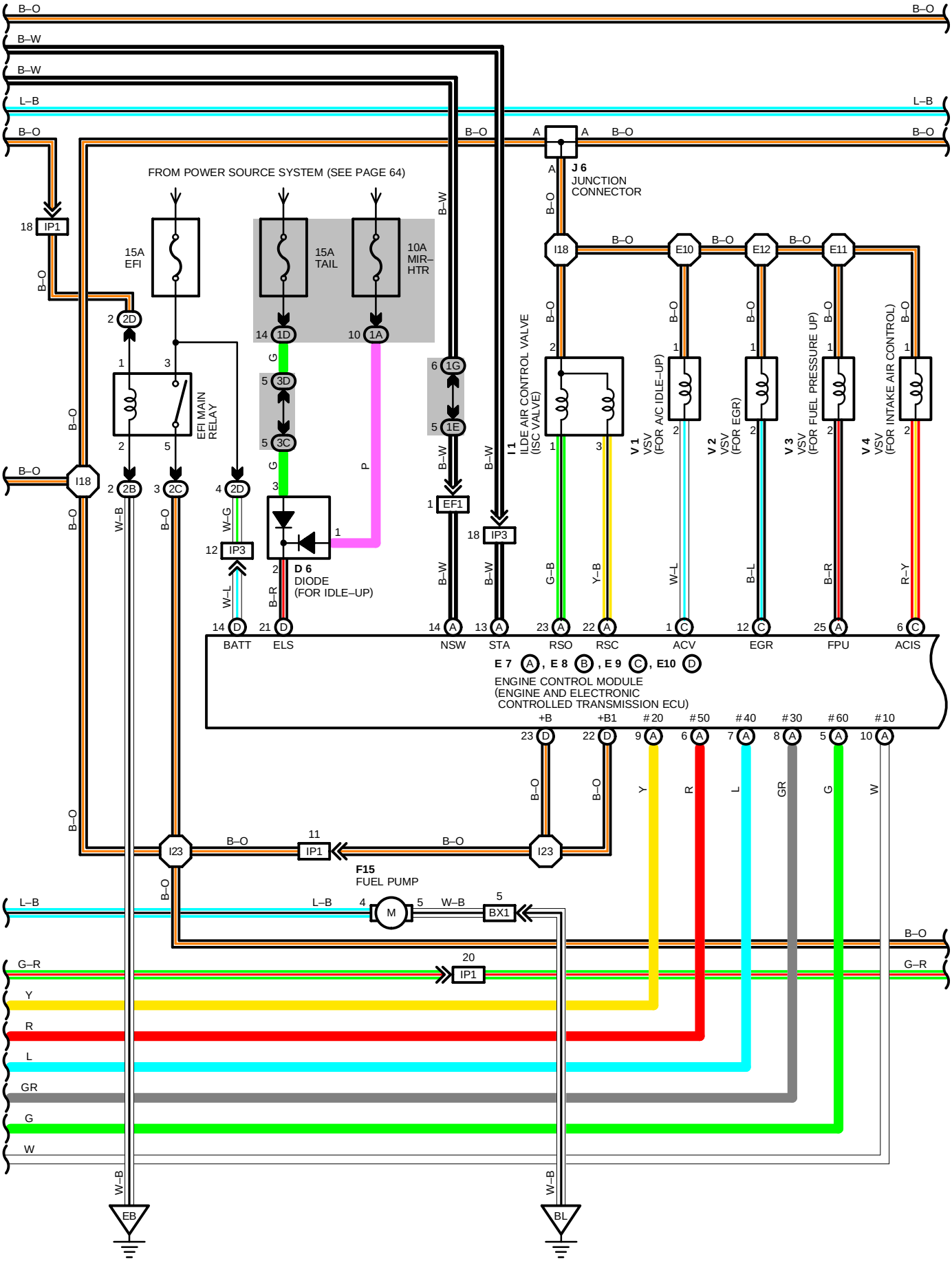
FROM POWER SOURCE SYSTEM (SEE PAGE 64)
15A EFI
15A TAIL
10A MIR–HTR
EFI MAIN RELAY
D 6 DIODE (FOR IDLE–UP)
J 6 JUNCTION CONNECTOR
I 1 ILDE AIR CONTROL VALVE (ISC VALVE)
V 1 VSV (FOR A/C IDLE–UP)
V 2 VSV (FOR EGR)
V 3 VSV (FOR FUEL PRESSURE UP)
V 4 VSV (FOR INTAKE AIR CONTROL)
BATT
ELS
NSW
STA
RSO
RSC
ACV
EGR
FPU
ACIS
E 7 A, E 8 B, E 9 C, E10 D
ENGINE CONTROL MODULE (ENGINE AND ELECTRONIC CONTROLLED TRANSMISSION ECU)
+B
+B1
#20
#50
#40
#30
#60
#10
F15 FUEL PUMP
EB
BL

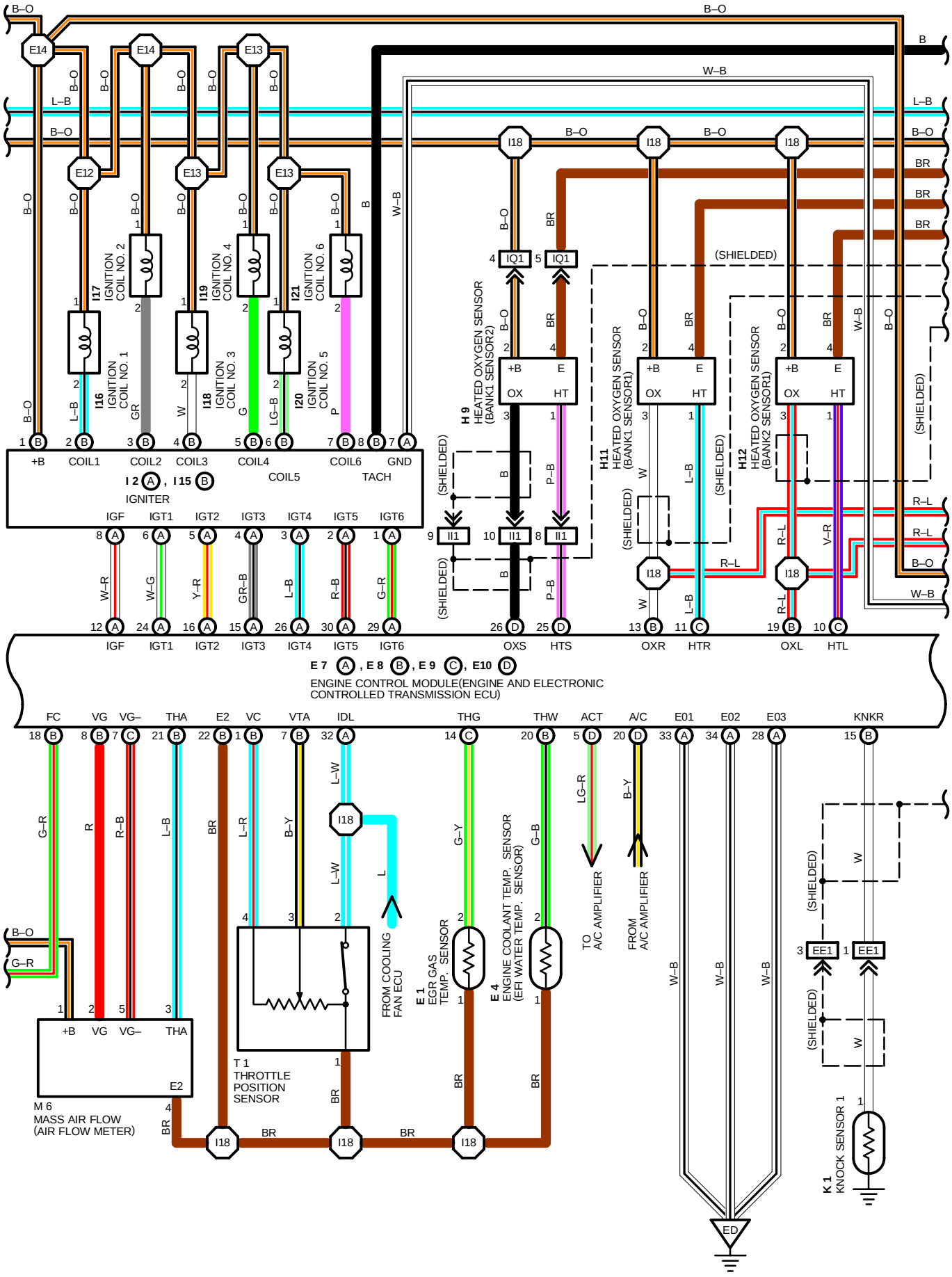
B–O
W–B
B
L–B
BR
R–L
V–R
W
(SHIELDED)
E14
E13
E12
I17 IGNITION COIL NO. 2
I16 IGNITION COIL NO. 1
I19 IGNITION COIL NO. 4
I18 IGNITION COIL NO. 3
I21 IGNITION COIL NO. 6
I20 IGNITION COIL NO. 5
+B
COIL1
COIL2
COIL3
COIL4
COIL5
COIL6
GND
TACH
I2 A , I15 B
IGNITER
IGF
IGT1
IGT2
IGT3
IGT4
IGT5
IGT6
H9 HEATED OXYGEN SENSOR (BANK1 SENSOR2)
H11 HEATED OXYGEN SENSOR (BANK1 SENSOR1)
H12 HEATED OXYGEN SENSOR (BANK2 SENSOR1)
I18
IQ1
II1
+B
E
OX
HT
OXS
HTS
OXR
HTR
OXL
HTL
E7 A , E8 B , E9 C , E10 D
ENGINE CONTROL MODULE(ENGINE AND ELECTRONIC CONTROLLED TRANSMISSION ECU)
FC
VG
VG–
THA
E2
VC
VTA
IDL
THG
THW
ACT
A/C
E01
E02
E03
KNKR
TO A/C AMPLIFIER
FROM A/C AMPLIFIER
FROM COOLING FAN ECU
E1 EGR GAS TEMP. SENSOR
E4 ENGINE COOLANT TEMP. SENSOR (EFI WATER TEMP. SENSOR)
T1 THROTTLE POSITION SENSOR
M6 MASS AIR FLOW (AIR FLOW METER)
EE1
K1 KNOCK SENSOR 1
ED

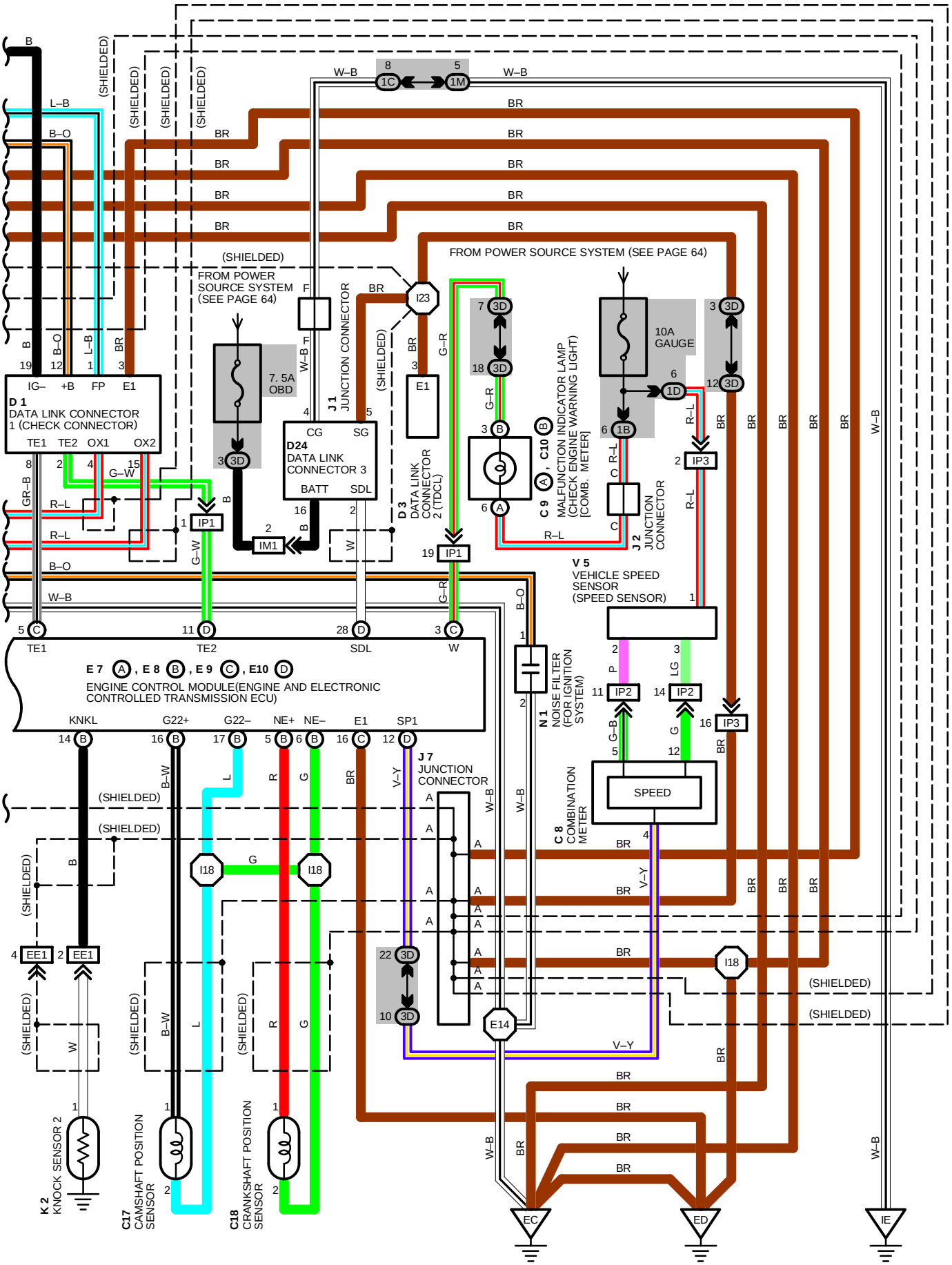
FROM POWER SOURCE SYSTEM (SEE PAGE 64)
D 1
DATA LINK CONNECTOR
1 (CHECK CONNECTOR)
IG– +B FP E1
TE1 TE2 OX1 OX2
7. 5A
OBD
J 1
JUNCTION CONNECTOR
D24
DATA LINK
CONNECTOR 3
CG SG
BATT SDL
D 3
DATA LINK
CONNECTOR
2 (TDCL)
C 9 , C10
MALFUNCTION INDICATOR LAMP
(CHECK ENGINE WARNING LIGHT)
[COMB. METER]
10A
GAUGE
J 2
JUNCTION
CONNECTOR
V 5
VEHICLE SPEED
SENSOR
(SPEED SENSOR)
E 7 , E 8 , E 9 , E10
ENGINE CONTROL MODULE(ENGINE AND ELECTRONIC
CONTROLLED TRANSMISSION ECU)
KNKL G22+ G22– NE+ NE– E1 SP1
TE1 TE2 SDL W
N 1
NOISE FILTER
(FOR IGNITION
SYSTEM)
C 8
COMBINATION
METER
SPEED
J 7
JUNCTION
CONNECTOR
K 2
KNOCK SENSOR 2
C17
CAMSHAFT POSITION
SENSOR
C18
CRANKSHAFT POSITION
SENSOR
(SHIELDED)
W–B
B–O
L–B
G–W
GR–B
R–L
G–R
B–W
V–Y
BR
EC
ED
IE
E14

SERVICE HINTS

CIRCUIT OPENING RELAY

2–1 : CLOSED WITH STARTER RUNNING OR MEASURING PLATE (VOLUME AIR FLOW (AIR FLOW METER)) OPEN

EFI MAIN RELAY

2–4 : CLOSED WITH IGNITION SW AT **ON** OR **ST** POSITION

E 4 ENGINE COOLANT TEMP. SENSOR (EFI WATER TEMP. SENSOR)

1–2 : **10.0 – 20.0** KΩ (**–20**˚C, **–4**˚F)
: **4.0 – 7.0** KΩ (**0**˚C, **32**˚F)
: **2.0 – 3.0** KΩ (**20**˚C, **68**˚F)
: **0.9 – 1.3** KΩ (**40**˚C, **104**˚F)
: **0.4 – 0.7** KΩ (**60**˚C, **140**˚F)
: **0.2 – 0.4** KΩ (**80**˚C, **176**˚F)

E 7(A), E 8(B), E 9(C), E10(D) ENGINE CONTROL MODULE (ENGINE AND ELECTRONIC CONTROLLED TRANSMISSION ECU)

VOLTAGE AT ENGINE CONTROL MODULE (ECU) WIRING CONNECTOR

BATT – **E1**	:	ALWAYS **9.0–14.0** VOLTS
+B – **E1**	:	**9.0–14.0** VOLTS (IGNITION SW AT **ON** POSITION)
+B1 – **E1**	:	**9.0–14.0** VOLTS (IGNITION SW AT **ON** POSITION)
IDL – **E1**	:	**9.0–14.0** VOLTS (IGNITION SW ON AND THROTTLE VALVE FULLY OPEN)
		0–3.0 VOLTS (IGNITION SW ON AND THROTTLE VALVE FULLY CLOSED)
VC – **E1**	:	ALWAYS **4.5–5.5** VOLTS (IGNITION SW AT **ON** POSITION)
VTA – **E1**	:	**0.3–0.8** VOLTS (IGNITION SW ON AND THROTTLE VALVE FULLY CLOSED)
		3.2–4.9 VOLTS (IGNITION SW ON AND THROTTLE VALVE FULLY OPEN)
VG – **E1**	:	**4.0–5.5** VOLTS (IGNITION SW AT **ON** POSITION)
THA – **E1**	:	**0.5–3.4** VOLTS (IGNITION SW ON AND INTAKE AIR TEMP. **20**˚C, **68**˚F)
THW – **E1**	:	**0.2–1.0** VOLTS (ENGINE IDLING AND COOLANT TEMP. **80**˚C, **176**˚F)
#10, #20, #30, #40, #50, #60		
– **E01**	:	**9.0–14.0** VOLTS (IGNITION SW AT **ON** POSITION)
		PULSE GENERATION (ENGINE IDLING)
IGT1, IGT2, IGT3		
IGT4, IGT5, IGT6 – **E1**	:	PULSE GENERATION (ENGINE IDLING)
IGF – **E1**	:	**4.5–5.5** VOLTS (IGNITION SW AT **ON** POSITION)
		PULSE GENERATION (ENGINE IDLING)
G22+ – **G–**	:	PULSE GENERATION (ENGINE IDLING)
NE+ – **G–**	:	PULSE GENERATION (ENGINE IDLING)
RSC, RSO – E1	:	PULSE GENERATION (ENGINE IDLING AND A/C OPERATION)
OXS, OXL, OXR – **E1**	:	PULSE GENERATION (MAINTAIN ENGINE SPEED AT **2500** RPM FOR TWO MINUTES AFTER WARMING UP)
HTS, HTL, HTR – **E01**	:	**9.0–14.0** VOLTS (IGNITION SW AT **ON** POSITION)
		0–3.0 VOLTS (ENGINE IDLING)
KNKL, KNLR – **E1**	:	PULSE GENERATION (ENGINE IDLING)
NSW – **E1**	:	**9.0–14.0** VOLTS (IGNITION SW ON AND OTHER SHIFT POSITION IN **P** OR **N** POSITION)
		BELOW **3.0** VOLTS (IGNITION SW ON AND SHIFT POSITION IN **P** OR **N** POSITION)
SP1 – **E1**	:	PULSE GENERATION (IGNITION SW ON AND ROTATE DRIVING WHEEL SLOWLY)
TE1 – **E1**	:	**9.0–14.0** VOLTS (IGNITION SW AT **ON** POSITION)
TE2 – **E1**	:	**9.0–14.0** VOLTS (IGNITION SW AT **ON** POSITION)
W – **E1**	:	BELOW **3.0** VOLTS (MULFUNCTION INDICATOR LAMP ON)
		9.0–14.0 VOLTS (MULFUNCTION INDICATOR LAMP OFF AND ENGINE RUNNING)
A/C – **E1**	:	BELOW **1.5** VOLTS (ENGINE IDLING AND A/C SW ON)
		7.5–14.0 VOLTS (A/C SW OFF)
ACT – **E1**	:	**9.0–14.0** VOLTS (ENGINE IDLING AND A/C SW ON)
		BELOW **1.5** VOLTS (A/C SW OFF)
ACIS – **E01**	:	**9.0–14.0** VOLTS (IGNITION SW AT **ON** POSITION)
STA – **E1**	:	**6.0** VOLTS OR MORE (ENGINE CRANKING)

I 4, I 5, I 6, I 7, I 8, I 9 INJECTOR

1–2 : APPROX. **13.8** Ω

T 1 THROTTLE POSITION SENSOR

3–1 : **0.2–5.7** KΩ WITH CLEARANCE BETWEEN LEVER AND STOP SCREW **0** MM (**0** IN.)
2–1 : LESS THAN **2.3** KΩ WITH CLEARANCE BETWEEN LEVER AND STOP SCREW **0.5** MM (**0.020** IN.)
WITH CLEARANCE BETWEEN LEVER AND STOP SCREW **0.7** MM (**0.0276** IN.)
3–1 : **2.0–10.2** KΩ WITH THROTTLE VALVE FULLY OPEN

: PARTS LOCATION

CODE		SEE PAGE	CODE		SEE PAGE	CODE	SEE PAGE
C 8		32	F16	B	28	I20	29
C 9	A	32	H 9	D	33	I21	29
C10	B	32	H11		28	J 1	33
C17		28	H12		28	J 2	33
C18		28	I 1		29	J 6	39
D 1		28	I 2	A	29	J 7	33
D 3		32	I 4		28	K 1	29
D 6		32	I 5		29	K 2	29
D24		32	I 6		29	M 6	29
E 1		28	I 7		29	N 1	29
E 4		28	I 8		29	T 1	29
E 7	A	32	I 9		29	V 1	29
E 8	B	32	F15	B	29	V 2	29
E 9	C	32	I16		29	V 3	29
E10	D	32	I17		29	V 4	29
F10	A	28	I18		29	V 5	29
F15		30	I19		29		

: RELAY BLOCKS

CODE	SEE PAGE	RELAY BLOCKS (RELAY BLOCK LOCATION)
1	25	R/B NO. 1 (LEFT KICK PANEL)
6	26	R/B NO. 6 (BEHIND GLOVE BOX)

: JUNCTION BLOCK AND WIRE HARNESS CONNECTOR

CODE	SEE PAGE	JUNCTION BLOCK AND WIRE HARNESS (CONNECTOR LOCATION)
1A	20	COWL WIRE AND J/B NO. 1 (INSTRUMENT PANEL LEFT)
1B		
1C		
1D		
1E		
1G		
1M		
2B	22	ENGINE ROOM MAIN WIRE AND J/B NO. 2 (ENGINE COMPARTMENT LEFT)
2C	22	ENGINE WIRE AND J/B NO. 2 (ENGINE COMPARTMENT LEFT)
2D		
2G	22	COWL WIRE AND J/B NO. 2 (ENGINE COMPARTMENT LEFT)
2H	22	ENGINE WIRE AND J/B NO. 2 (ENGINE COMPARTMENT LEFT)
3A	24	COWL WIRE AND J/B NO. 3 (BEHIND COMBINATION METER)
3B		
3C		
3D		

: CONNECTOR JOINING WIRE HARNESS AND WIRE HARNESS

CODE	SEE PAGE	JOINING WIRE HARNESS AND WIRE HARNESS (CONNECTOR LOCATION)
EE1	40 (1MZ–FE)	ENGINE WIRE AND SENSOR WIRE
EF1	38 (1MZ–FE)	ENGINE WIRE AND COWL WIRE
II1	42	COWL WIRE AND INSTRUMENT PANEL WIRE
IJ1	42	FLOOR NO. 1 WIRE AND COWL WIRE
IM1	42	INSTRUMENT PANEL WIRE AND CONSOLE BOX WIRE
IP1	44	ENGINE WIRE AND COWL WIRE
IP2		
IP3		
IQ1	44	ENGINE WIRE AND INSTRUMENT PANEL WIRE
BX1	46 (S/D)	FUEL GAUGE WIRE AND FLOOR NO. 1 WIRE
	48 (C/P)	
	50 (W/G)	

ENGINE CONTROL (1MZ–FE)

: GROUND POINTS

CODE	SEE PAGE	GROUND POINTS LOCATION
EB	38 (1MZ–FE)	FRONT LEFT FENDER
EC	38 (1MZ–FE)	INTAKE MANIFOLD RH
ED	38 (1MZ–FE)	INTAKE MANIFOLD LH
IE	42	LEFT KICK PANEL
IG	42	INSTRUMENT PANEL BRACE LH
BL	46 (S/D)	UNDER THE LEFT QUARTER PILLAR
	48 (C/P)	
	50 (W/G)	

: SPLICE POINTS

CODE	SEE PAGE	WIRE HARNESS WITH SPLICE POINTS	CODE	SEE PAGE	WIRE HARNESS WITH SPLICE POINTS
E10	38 (1MZ–FE)	ENGINE WIRE	**E14**	38 (1MZ–FE)	ENGINE WIRE
E11			**I18**	44	
E12			**I20**	44	COWL WIRE
E13			**I23**		

C 8 (A) BLUE

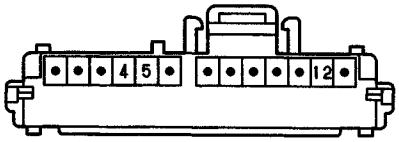

C 9 (B)

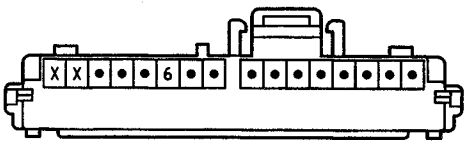

C10 (C) GRAY

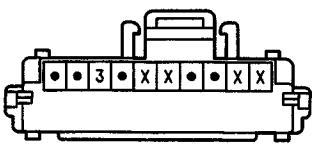

C17, C18 BLACK



D 1 BLACK

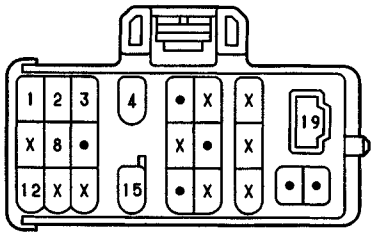

D 3 DARK GRAY

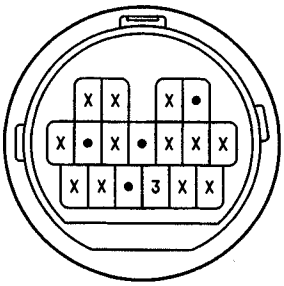

D 6 ORANGE

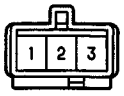

D24 BLACK

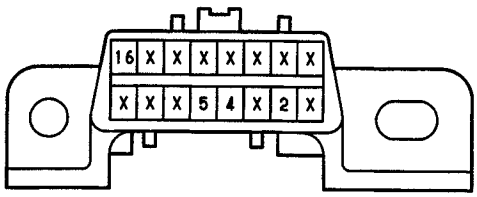

E 1 DARK GRAY



E 4 DARK GRAY



E 7 (A) DARK GRAY

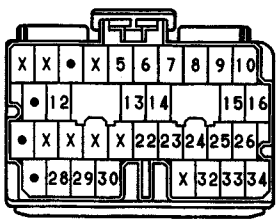

E 8 (B) DARK GRAY

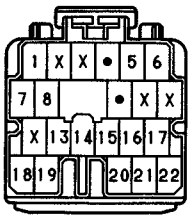

E 9 (C) DARK GRAY

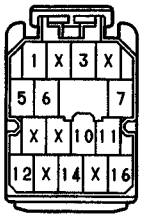

E10 (D) DARK GRAY

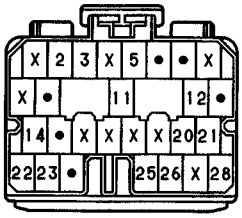

F10 (A)

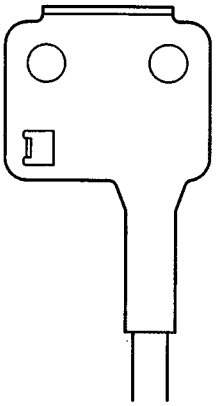

F15 DARK GRAY



F16 (B)



H 9, H11, H12



I 1 GRAY



I 2 (A) BLACK

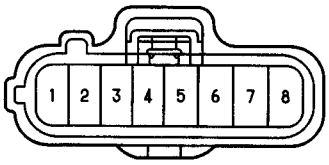

I 4, I 5, I 6
I 7, I 8, I 9 GRAY



I12

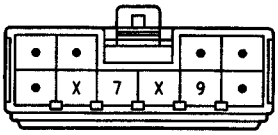

I15 (B) DARK GRAY

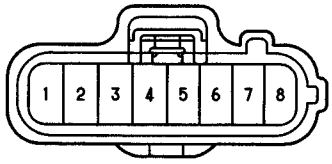

I16, I17, I18
I19, I20, I21 BLACK

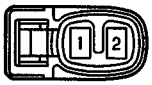

J 1 DARK GRAY

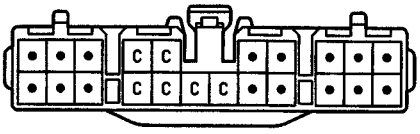

(HINT:SEE PAGE 7)

J 2

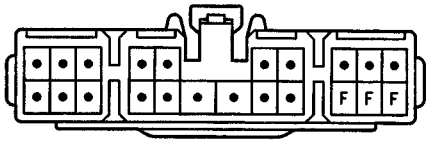

(HINT:SEE PAGE 7)

J 6

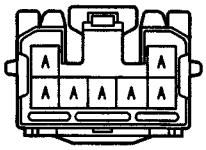

(HINT:SEE PAGE 7)

J 7 BLUE

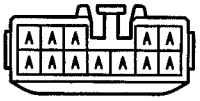

(HINT:SEE PAGE 7)

K, 1 K, 2 DARK GRAY



M 6 BLACK

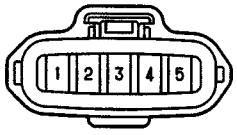

N 1 GRAY



T 1 BLACK

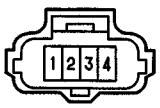

V 1 BLACK

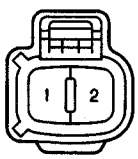

V 2, V 4 BROWN



V 3 BLUE



V 5 GRAY



SYSTEM OUTLINE

THIS SYSTEM UTILIZES AN ENGINE CONTROL MODULE (ENGINE ECU (M/T), ENGINE AND ELECTRONIC CONTROLLED TRANSMISSION ECU (A/T)) AND MAINTAINS OVERALL CONTROL OF THE ENGINE, TRANSMISSION AND SO ON. AN OUTLINE OF THE ENGINE CONTROL IS EXPLAINED HERE.

1. INPUT SIGNALS

(1) ENGINE COOLANT TEMP. (WATER TEMP.) SIGNAL SYSTEM

THE ENGINE COOLANT TEMP. SENSOR (EFI WATER TEMP. SENSOR) DETECTS THE ENGINE COOLANT TEMP. AND HAS A BUILT–IN THERMISTOR WITH A RESISTANCE WHICH VARIES ACCORDING TO THE ENGINE COOLANT TEMP. (WATER TEMP.) THUS THE ENGINE COOLANT TEMP. (WATER TEMP.) IS INPUT IN THE FORM OF A CONTROL SIGNAL TO **TERMINAL THW** OF THE ENGINE CONTROL MODULE (ECU).

(2) INTAKE AIR TEMP. SIGNAL SYSTEM

THE INTAKE AIR TEMP. SENSOR (IN–AIR TEMP. SENSOR) IS DETECTS THE INTAKE AIR TEMP., WHICH IS INPUT AS A CONTROL SIGNAL TO **TERMINAL THA** OF THE ENGINE CONTROL MODULE (ECU).

(3) OXYGEN SENSOR SIGNAL SYSTEM

THE OXYGEN DENSITY IN THE EXHAUST GASES IS DETECTED AND INPUT AS A CONTROL SIGNAL TO **TERMINAL OX1** AND **OX2** OF THE ENGINE CONTROL MODULE (ECU).

(4) RPM SIGNAL SYSTEM

CRANKSHAFT POSITION AND ENGINE RPM ARE DETECTED BY THE PICK–UP COIL INSTALLED INSIDE THE DISTRIBUTOR. CRANKSHAFT POSITION IS INPUT AS A CONTROL SIGNAL TO **TERMINALS G+** AND **G2** (CALIFORNIA), OF THE ENGINE CONTROL MODULE (ECU), AND RPM IS INPUT TO **TERMINAL NE+**.

(5) THROTTLE SIGNAL SYSTEM

THE THROTTLE POSITION SENSOR DETECTS THE THROTTLE VALVE OPENING ANGLE, WHICH IS INPUT AS A CONTROL SIGNAL TO **TERMINAL VTA** OF THE ENGINE CONTROL MODULE (ECU), OR WHEN THE VALVE IS FULLY CLOSED, TO **TERMINAL IDL**

(6) VEHICLE SPEED SIGNAL SYSTEM

THE VEHICLE SPEED SENSOR (SPEED SENSOR), INSTALLED INSIDE THE COMBINATION METER, DETECTS THE VEHICLE SPEED AND INPUTS A CONTROL SIGNAL TO **TERMINAL SPD** OF THE ENGINE CONTROL MODULE (ECU).

(7) PARK/NEUTRAL POSITION SW (NEUTRAL START SW) SIGNAL SYSTEM (A/T)

THE PARK/NEUTRAL POSITION SW (NEUTRAL START SW) DETECTS WHETHER THE SHIFT POSITION ARE IN NEUTRAL AND PARKING OR NOT, AND INPUTS A CONTROL SIGNAL TO **TERMINAL NSW** OF THE ENGINE CONTROL MODULE (ECU).

(8) A/C SW SIGNAL SYSTEM

THE A/C AMPLIFIER INPUTS THE A/C OPERATIONS TO **TARMINAL ACA** OF THE ENGINE CONTROL MODULE (ECU) AS A CONTROL SIGNAL.

(9) BATTERY SIGNAL CIRCUIT

VOLTAGE IS CONSTANTLY APPLIED TO **TERMINAL BATT** OF THE ENGINE CONTROL MODULE (ECU). WHEN THE IGNITION SW TURNED ON, THE VOLTAGE FOR ENGINE CONTROL MODULE (ECU) START–UP POWER SUPPLY IS APPLIED TO **TERMINALS +B** AND **+B1** OF ENGINE CONTROL MODULE (ECU) VIA EFI MAIN RELAY. THE CURRENT FLOWING THROUGH THE **IGN** FUSE FLOWS TO **TERMINAL IGSW** OF THE ENGINE CONTROL MODULE (ECU).

(10) INTAKE AIR VOLUME SIGNAL SYSTEM

INTAKE AIR VOLUME IS DETECTED BY THE MANIFOLD ABSOLUTE PRESSURE SENSOR (VACUUM SENSOR) (FOR MANIFOLD PRESSURE) AND IS INPUT AS A CONTROL SIGNAL TO **TERMINAL PIM** OF THE ENGINE CONTROL MODULE (ECU).

(11) STA SIGNAL CIRCUIT

TO CONFIRM WHETHER THE ENGINE IS CRANKING, THE VOLTAGE APPLIED TO THE STARTER MOTOR DURING CRANKING IS DETECTED AND THE SIGNAL IS INPUT INTO **TERMINAL STA** OF THE ENGINE CONTROL MODULE (ECU) AS A CONTROL SIGNAL.

(12) ENGINE KNOCK SIGNAL CIRCUIT

ENGINE KNOCKING IS DETECTED BY KNOCK SENSOR AND THE SIGNAL IS INPUT INTO **TERMINAL KNK** AS A CONTROL SIGNAL.

(13) ELECTRICAL LOAD SIGNAL SYSTEM

THE SIGNAL WHEN SYSTEMS SUCH AS THE REAR WINDOW DEFOGGER, HEADLIGHTS, ETC. WHICH CAUSE A HIGH ELECTRICAL BURDEN ARE ON IS INPUT TO **TERMINAL ELS** AS A CONTROL SIGNAL.

2. CONTROL SYSTEM

* MFI (MULTIPORT FUEL INJECTION (EFI)) SYSTEM

  THE MFI (EFI) SYSTEM MONITORS THE ENGINE CONDITION THROUGH THE SIGNALS INPUT FROM EACH SENSOR (INPUT SIGNALS FROM (1) TO (13) ETC.) TO THE ENGINE CONTROL MODULE (ECU). THE BEST FUEL INJECTION VOLUME IS DECIDED BASED ON THIS DATA AND THE PROGRAM MEMORIZED BY THE ENGINE CONTROL MODULE (ECU), AND THE CONTROL SIGNAL IS OUTPUT TO **TERMINALS #10, #20, #30** AND **#40** (CALIFORNIA), **TERMINALS #10** AND **#20** (EX. CALIFORNIA) OF THE ENGINE CONTROL MODULE (ECU) TO OPERATE THE INJECTOR. (INJECT THE FUEL). THE MFI (EFI) SYSTEM PRODUCES CONTROL OF FUEL INJECTION OPERATION BY THE ENGINE CONTROL MODULE (ECU) IN RESPONSE TO THE DRIVING CONDITIONS.

* ESA (ELECTRONIC SPARK ADVANCE) SYSTEM

  THE ESA SYSTEM MONITORS THE ENGINE CONDITION THROUGH THE SIGNALS INPUT TO THE ENGINE CONTROL MODULE (ECU) FROM EACH SENSOR (INPUT SIGNALS FROM (1), (2), (4) TO (12) ETC.) THE BEST IGNITION TIMING IS DETECTED ACCORDING TO THIS DATA AND THE MEMORIZED DATA IN THE ENGINE CONTROL MODULE (ECU) AND THE CONTROL SIGNAL IS OUTPUT TO **TERMINAL IGT**. THIS SIGNAL CONTROLS THE IGNITER TO PROVIDE THE BEST IGNITION TIMING FOR THE DRIVING CONDITIONS.

* IAC (IDLE AIR CONTROL (ISC)) SYSTEM

  THE IAC (ISC) SYSTEM (ROTARY SOLENOID TYPE) INCREASES THE RPM AND PROVIDES IDLING STABILITY FOR FAST IDLE–UP WHEN THE ENGINE IS COLD AND WHEN THE IDLE SPEED HAS DROPPED DUE TO ELECTRICAL LOAD, ETC. THE ENGINE CONTROL MODULE (ECU) EVALUATES THE SIGNALS FROM EACH SENSOR (INPUT SIGNALS (1), (4) TO (8), (13) ETC.), OUTPUTS CURRENT TO **TERMINALS ISCO** AND **ISCC**, AND CONTROLS THE IDLE AIR CONTROL VALVE (ISC VALVE).

* FUEL PUMP CONTROL SYSTEM

  THE ENGINE CONTROL MODULE (ECU) OPERATION OUTPUTS TO **TERMINAL FC** AND CONTROLS THE CIRCUIT OPENING RELAY AND THUS CONTROLS THE FUEL PUMP DRIVE SPEED IN RESPONSE TO CONDITIONS.

* A/C IDLE–UP SYSTEM

  IN ORDER TO PREVENT THE ENGINE IDLING SPEED FROM DROPPING WHEN THE A/C IS OPERATING, THE A/C IDLE–UP SYSTEM CONTROLS THE VSV (FOR A/C IDLE–UP) TO INCREASE THE ENGINE IDLING SPEED AND KEEP IT STABLE.

* EGR CONTROL SYSTEM

  THE EGR CUT CONTROL SYSTEM CONTROLS THE VSV (FOR EGR) BY EVALUATING THE SIGNALS FROM EACH SENSOR INPUT TO THE ENGINE CONTROL MODULE (ECU) (INPUT SIGNALS (1), (5), (6), (9) ETC.) AND BY SENDING OUTPUT TO **TERMINAL THG** OF THE ENGINE CONTROL MODULE (ECU).

* A/C CUT CONTROL SYSTEM

  WHEN THE VEHICLE SUDDENLY ACCELERATES FROM LOW ENGINE SPEED, THIS SYSTEM CUTS OFF AIR CONDITIONING OPERATION FOR A FIXED PERIOD OF TIME IN RESPONSE TO THE VEHICLE SPEED AND THROTTLE VALVE OPENING ANGLE IN ORDER TO MAINTAIN ACCELERATION PERFORMANCE.

  THE ENGINE CONTROL MODULE (ECU) RECEIVES INPUT SIGNALS ((5), (6) ETC.), AND OUTPUTS SIGNALS TO **TERMINAL ACT**.

3. DIAGNOSIS SYSTEM

WITH THE DIAGNOSIS SYSTEM, WHEN THERE IS A MALFUNCTIONING IN THE ENGINE CONTROL MODULE (ECU) SIGNAL SYSTEM, THE MALFUNCTION SYSTEM IS RECORDED IN THE MEMORY. THE MALFUNCTIONING SYSTEM CAN THEN BE FOUND BY READING THE DISPLAY (CODE) OF THE MALFUNCTION INDICATOR LAMP (CHECK ENGINE WARNING LIGHT).

4. FAIL–SAFE SYSTEM

WHEN A MALFUNCTION OCCURS IN ANY SYSTEM, IF THERE IS A POSSIBILITY OF ENGINE TROUBLE BEING CAUSED BY CONTINUED CONTROL BASED ON THE SIGNALS FROM THAT SYSTEM, THE FAIL–SAFE SYSTEM EITHER CONTROLS THE SYSTEM BY USING DATA (STANDARD VALUES) RECORDED IN THE ENGINE CONTROL MODULE (ECU) MEMORY OR ELSE STOPS THE ENGINE.

ENGINE CONTROL (5S–FE A/T AND CALIFORNIA M/T)

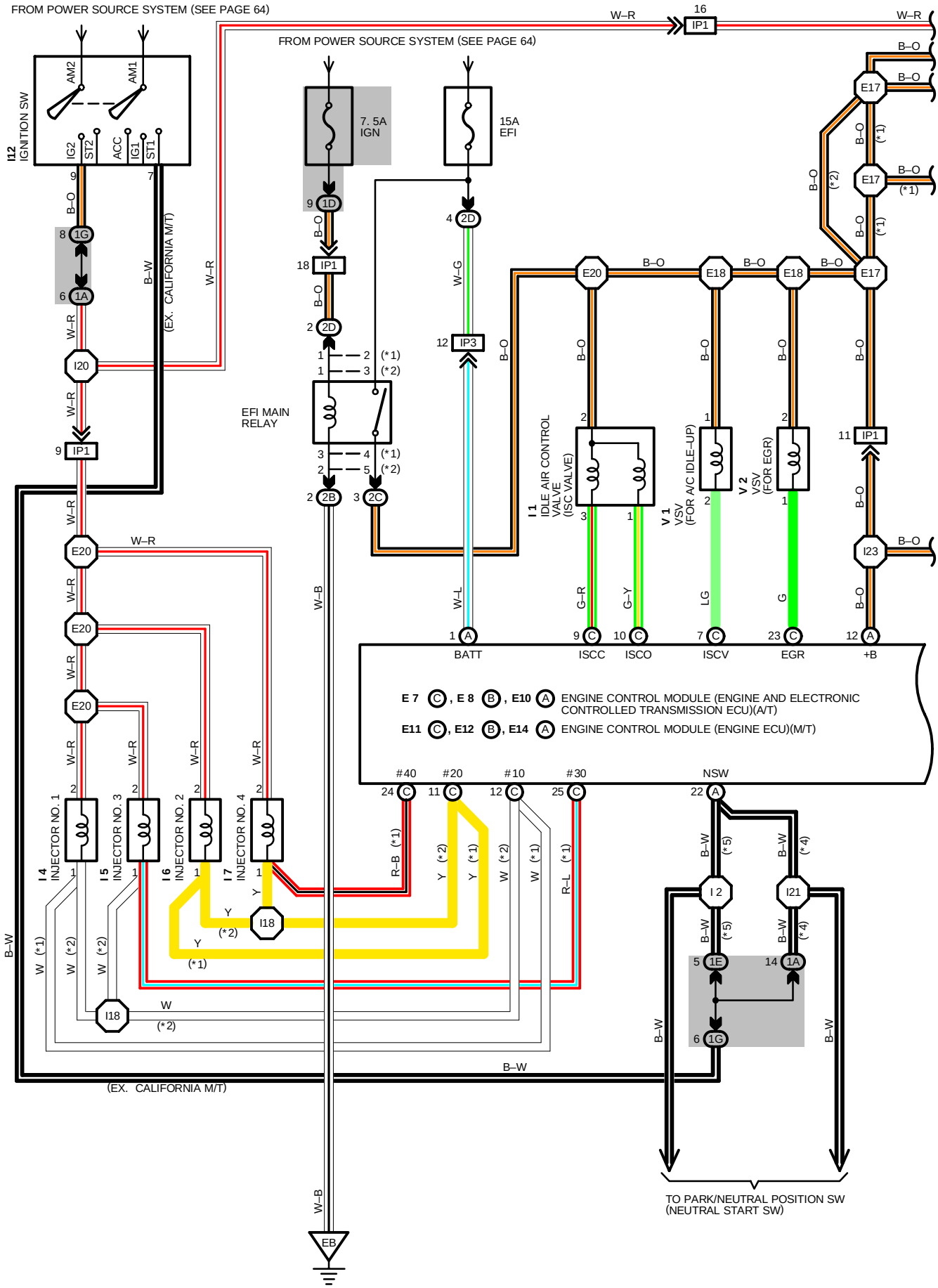

*1 : CALIFORNIA
*2 : EX. CALIFORNIA
*4 : FOR CANADA IN TMM MADE
*5 : EX. *4

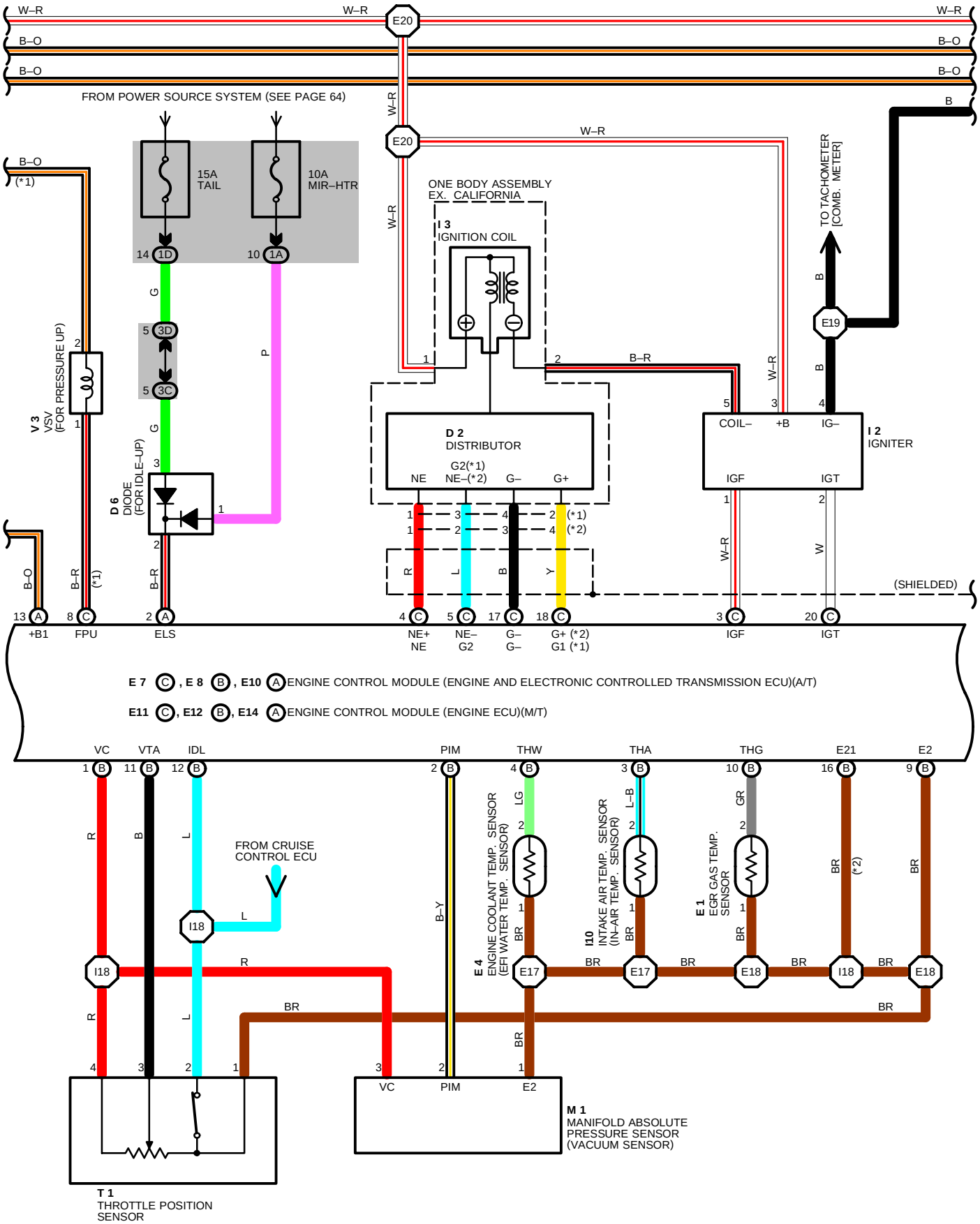

ENGINE CONTROL (5S–FE A/T AND CALIFORNIA M/T)

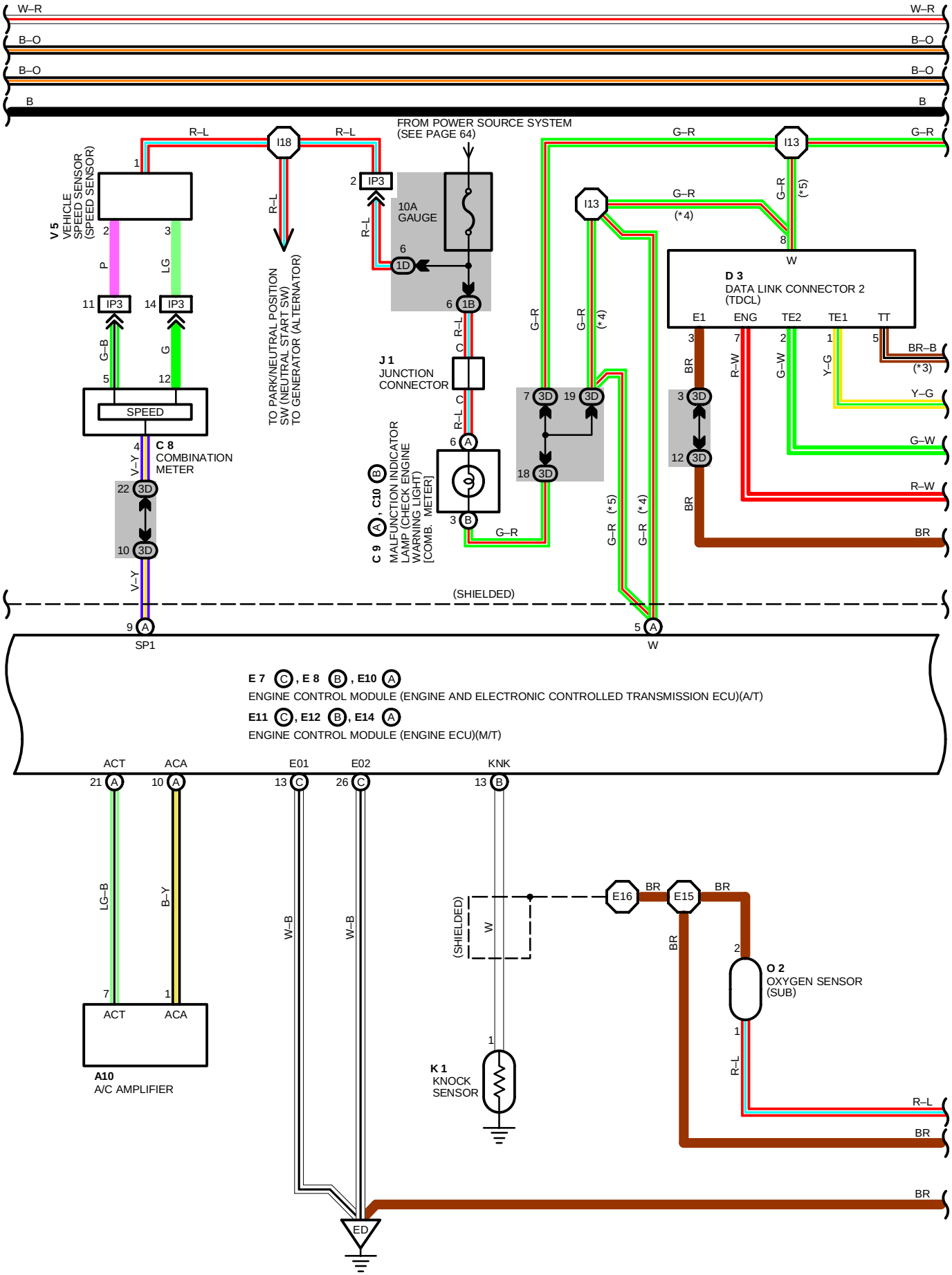

*1 : CALIFORNIA
*2 : EX. CALIFORNIA
*3 : EX. CALIFORNIA M/T
*4 : FOR CANADA IN TMM MADE *5 : EX. *4

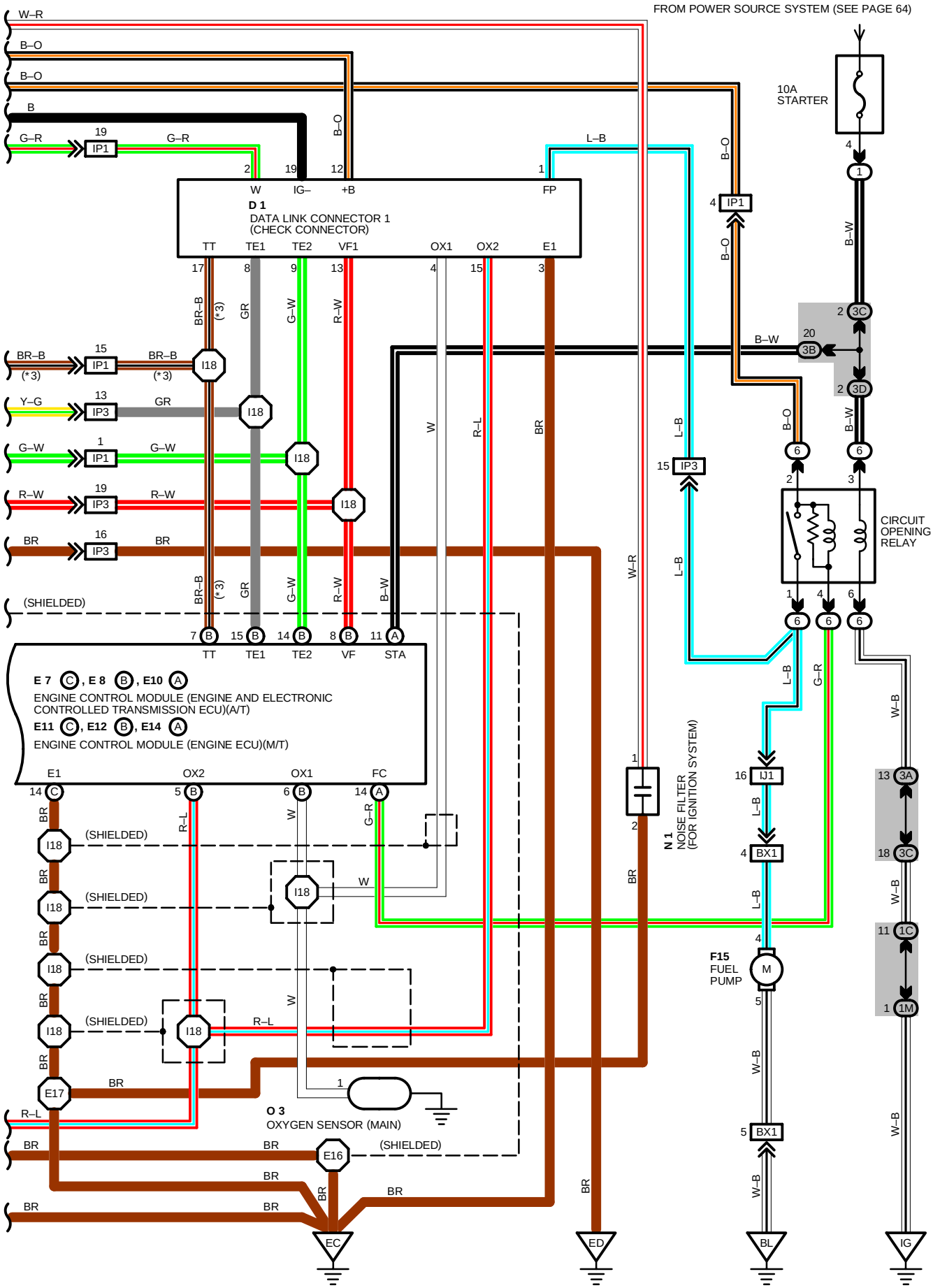

ENGINE CONTROL (5S–FE A/T AND CALIFORNIA M/T)

SERVICE HINTS

E 7(C), E 8(B), E10(A) ENGINE CONTROL MODULE (ENGINE AND ELECTRONIC CONTROLLED TRANSMISSION ECU) (A/T)
E11(C), E12(B), E14(A) ENGINE CONTROL MODULE (ENGINE ECU) (M/T)

VOLTAGE AT ENGINE CONTROL MODULE (ECU) WIRING CONNECTOR

BATT – E1 : ALWAYS **9.0–14.0** VOLTS
+B – E1 : **9.0–14.0** VOLTS (IGNITION SW AT **ON** POSITION)
+B1 – E1 : **9.0–14.0** VOLTS (IGNITION SW AT **ON** POSITION)
IDL – E2 : **9.0–14.0** VOLTS (IGNITION SW ON AND THROTTLE VALVE OPEN)
VC – E2 : **4.5– 5.5** VOLTS (IGNITION SW AT **ON** POSITION)
VTA – E2 : **0.3– 0.8** VOLTS (IGNITION SW ON AND THROTTLE VALVE FULLY CLOSED)
: **3.2– 4.9** VOLTS (IGNITION SW ON AND THROTTLE VALVE OPEN)
PIM – E2 : **3.3– 3.9** VOLTS (IGNITION SW AT **ON** POSITION)
#10, #20 – E01, E02 : **9.0–14.0** VOLTS (IGNITION SW AT **ON** POSITION) (EX. CALIFORNIA)
#10, #20, #30, #40 – E01, E02 : **9.0–14.0** VOLTS (IGNITION SW AT **ON** POSITION) (CALIFORNIA)
THA – E2 : **0.5– 3.4** VOLTS (IGNITION SW ON AND INTAKE AIR TEMP. **20**˚C, **68**˚F)
THW – E2 : **0.2– 1.0** VOLTS (IGNITION SW ON AND COOLANT TEMP. **80**˚C, **176**˚F)
STA – E1 : **6.0–14.0** VOLTS (ENGINE CRANKING)
IGT – E1 : PULSE GENERATION (ENGINE CRANKING OR IDLING)
W – E1 : **9.0–14.0** VOLTS (NO TROUBLE AND ENGINE RUNNING)
ACT – E1 : **9.0–14.0** VOLTS (IGNITION SW ON AND AIR CONDITIONING ON)
ACA – E1 : **7.5–14.0** VOLTS (IGNITION SW ON AND AIR CONDITIONING ON)
TE1 – E1 : **9.0–14.0** VOLTS (IGNITION SW ON)
NSW – E1 : **0– 3.0** VOLTS (IGNITION SW ON AND PARK/NEUTRAL POSITION SW (NEUTRAL START SW) POSITION **P** OR **N** POSITION)
9.0–14.0 VOLTS (IGNITION SW ON AND EX. PARK/NEUTRAL POSITION SW (NEUTRAL START SW) POSITION **P** OR **N** POSITION)

RESISTANCE AT ENGINE CONTROL MODULE (ECU) WIRING CONNECTORS

(DISCONNECT WIRING CONNECTOR)

IDL – E2 : INFINITY (THROTTLE VALVE OPEN)
2.3 KΩ OR LESS (THROTTLE VALVE FULLY CLOSED)
VTA – E2 : **3.3 –10.0** KΩ (THROTTLE VALVE FULLY OPEN)
0.2 – 0.8 KΩ (THROTTLE VALVE FULLY CLOSED)
VC – E2 : **3.0 –7 0** KΩ
THA – E2 : **2.0 –3.0** KΩ (INTAKE AIR TEMP. **20**˚C, **68**˚F)
THW – E2 : **0.2 –0.4** KΩ (COOLANT TEMP. **80**˚C, **176**˚F)
G1, NE – G– : **0.17–0.21** KΩ
ISCC, ISCO– +B, +B1 : **19.3–22.3** Ω

○ : PARTS LOCATION

CODE		SEE PAGE	CODE		SEE PAGE	CODE	SEE PAGE
A10		32	**E11**	A	32	**J 1**	33
C 8		32	**E12**	C	32	**K 1**	31
C 9	A	32	**E14**	B	32	**M 1**	31
C10	C	32	**F15**	A	34 (S/D), 35 (C/P), 36 (W/G)	**N 1**	31
D 1		30	**I 1**		31	**O 2**	31
D 2		30	**I 2**		31	**O 3**	31
D 3		32	**I 3**		31	**T 1**	31
D 6		32	**I 4**		31	**V 1**	31
E 1		30	**I 5**		31	**V 2**	31
E 4		30	**I 6**		31	**V 3**	31
E 7	C	32	**I 7**		31	**V 5**	31
E 8	B	32	**I10**		31		
E10	A	32	**I12**		33		

▭ : RELAY BLOCKS

CODE	SEE PAGE	RELAY BLOCKS (RELAY BLOCK LOCATION)
1	25	R/B NO. 1 (LEFT KICK PANEL)
6	26	R/B NO. 6 (BEHIND GLOVE BOX)

: JUNCTION BLOCK AND WIRE HARNESS CONNECTOR

CODE	SEE PAGE	JUNCTION BLOCK AND WIRE HARNESS (CONNECTOR LOCATION)
1A	20	COWL WIRE AND J/B NO. 1 (INSTRUMENT PANEL LEFT)
1B		
1C		
1D		
1G		
1M		
2D	22	ENGINE WIRE AND J/B NO. 2 (ENGINE COMPARTMENT LEFT)
3A	24	COWL WIRE AND J/B NO. 3 (BEHIND COMBINATION METER)
3B		
3C		
3D		

: CONNECTOR JOINING WIRE HARNESS AND WIRE HARNESS

CODE	SEE PAGE	JOINING WIRE HARNESS AND WIRE HARNESS (CONNECTOR LOCATION)
IJ1	42	FLOOR NO. 1 WIRE AND COWL WIRE
IP1	44	ENGINE WIRE AND COWL WIRE
IP3		
BX1	46 (S/D)	FUEL GAUGE WIRE AND FLOOR NO. 1 WIRE
	48 (C/P)	
	50 (W/G)	

: GROUND POINTS

CODE	SEE PAGE	GROUND POINTS LOCATION
EB	40 (5S–FE)	FRONT LEFT FENDER
EC	40 (5S–FE)	INTAKE MANIFOLD RH
ED	40 (5S–FE)	INTAKE MANIFOLD LH
IG	42	INSTRUMENT PANEL BRACE LH
BL	46 (S/D)	UNDER THE LEFT QUARTER PILLAR
	48 (C/P)	
	50 (W/G)	

: SPLICE POINTS

CODE	SEE PAGE	WIRE HARNESS WITH SPLICE POINTS	CODE	SEE PAGE	WIRE HARNESS WITH SPLICE POINTS
E15	40 (5S–FE)	ENGINE WIRE	**I 2**	44	COWL WIRE
E16			**I13**		
E17			**I18**	44	ENGINE WIRE
E18			**I20**	44	COWL WIRE
E19			**I23**		
E20					

*1 : CALIFORNIA
2 : EX. CALIFORNIA

A10

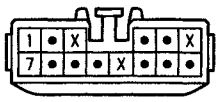

C 8 BLUE

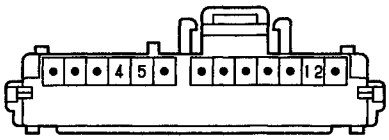

C 9 (A)

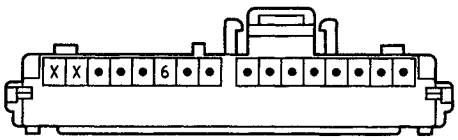

C10 (B) GRAY

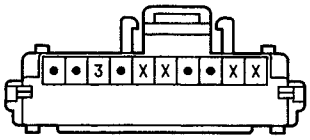

D 1 BLACK

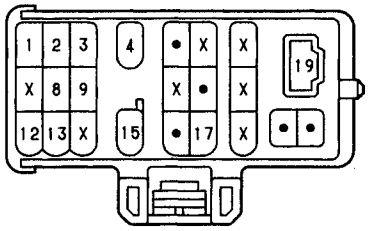

D 2 BLACK

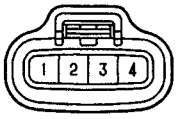

D 3 DARK GRAY

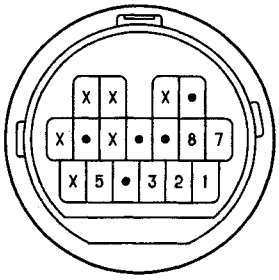

D 6 ORANGE

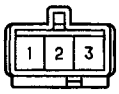

E 1 DARK GRAY



E 4 GREEN



E 7, E11 (C) DARK GRAY

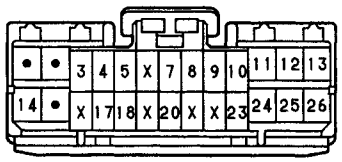

E 8, E12 (B) DARK GRAY

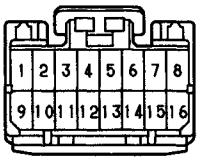

E10, E14 (A) DARK GRAY

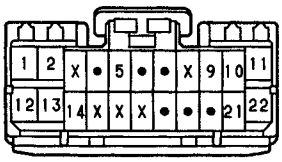

F15 DARK GRAY



I 1 GRAY

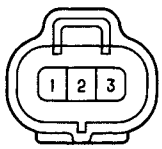

I 2 BLACK

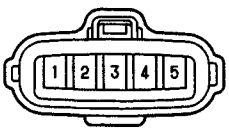

(*1) I 3 BLACK

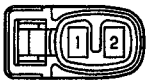

(*2) I 3 BLACK



I 4, I 5, I 6, I 7 GRAY



(*1) I10 GRAY
(*2) I10 BLACK



I12 BLACK

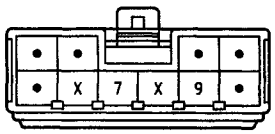

J 1 DARK GRAY

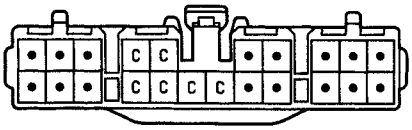

(HINT:SEE PAGE 7)

K 1 DARK GRAY



M 1 BLACK

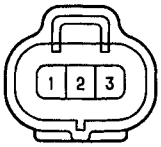

N 1 GRAY



O 2 DARK GRAY



O 3 DARK GRAY

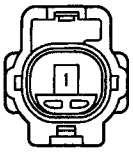

T 1 BLACK



V 1 BLACK

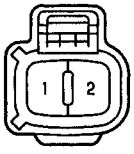

V 2 BLUE



(*1) V 3 BROWN



V 5 GRAY



A10

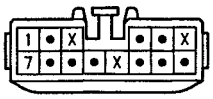

C 8 BLUE

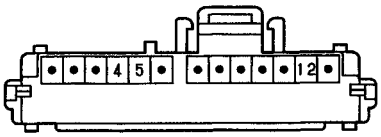

C 9 (A)

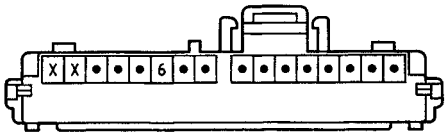

C10 (B) GRAY

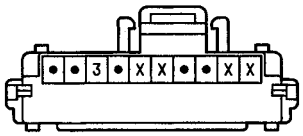

D 1 BLACK

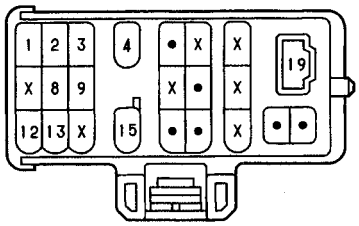

D 2 BLACK



D 3 DARK GRAY

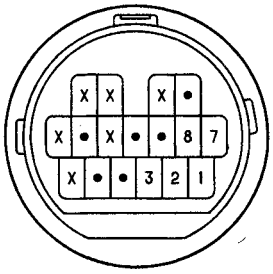

D 6 ORANGE

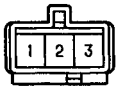

E 1 DARK GRAY



E 4 GREEN



E11 (A) DARK GRAY

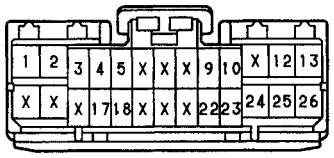

E12 (B) DARK GRAY

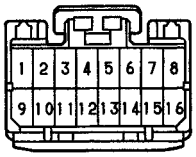

E14 (C) DARK GRAY

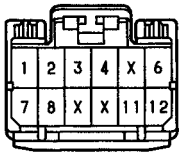

F15 GRAY

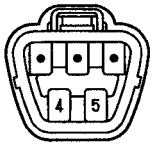

I 1 GRAY

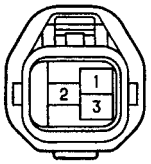

I 2 BLACK

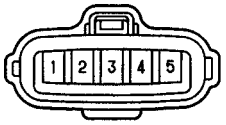

I 3 BLACK



I 4, I 5, I 6, I 7 GRAY



I10 BLACK



I12 BLACK

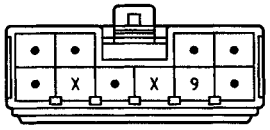

J 1 DARK GRAY

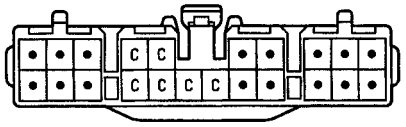

(HINT:SEE PAGE 7)

K 1 DARK GRAY



M 1 BLACK

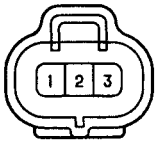

N 1 GRAY

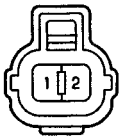

O 2 DARK GRAY



O 3 DARK GRAY

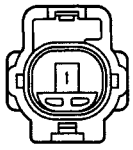

T 1 BLACK

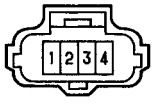

V 1 BLACK

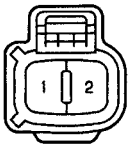

V 2 BLACK



V 5 GRAY



ENGINE CONTROL (5S–FE M/T EX. CALIFORNIA)

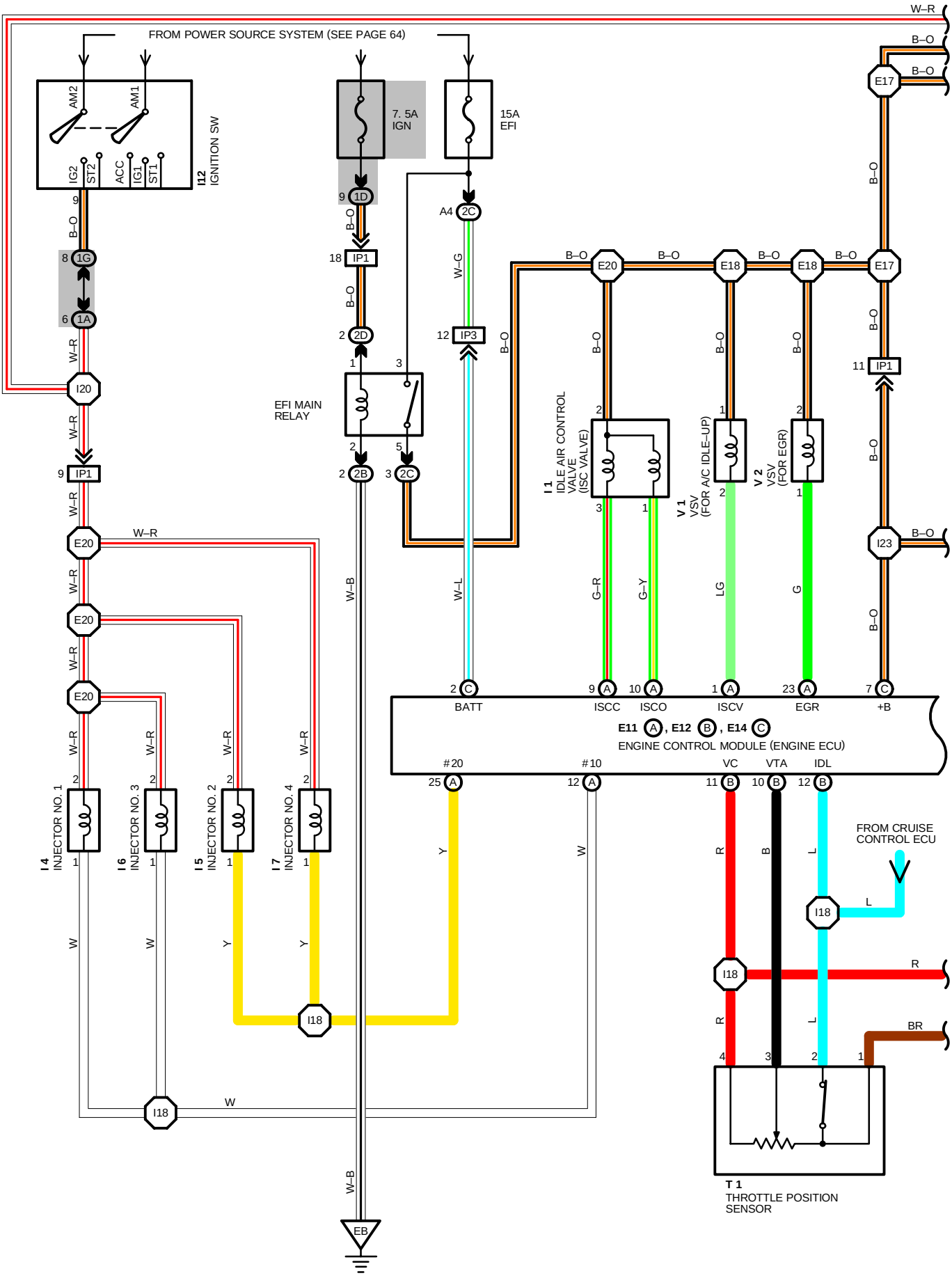

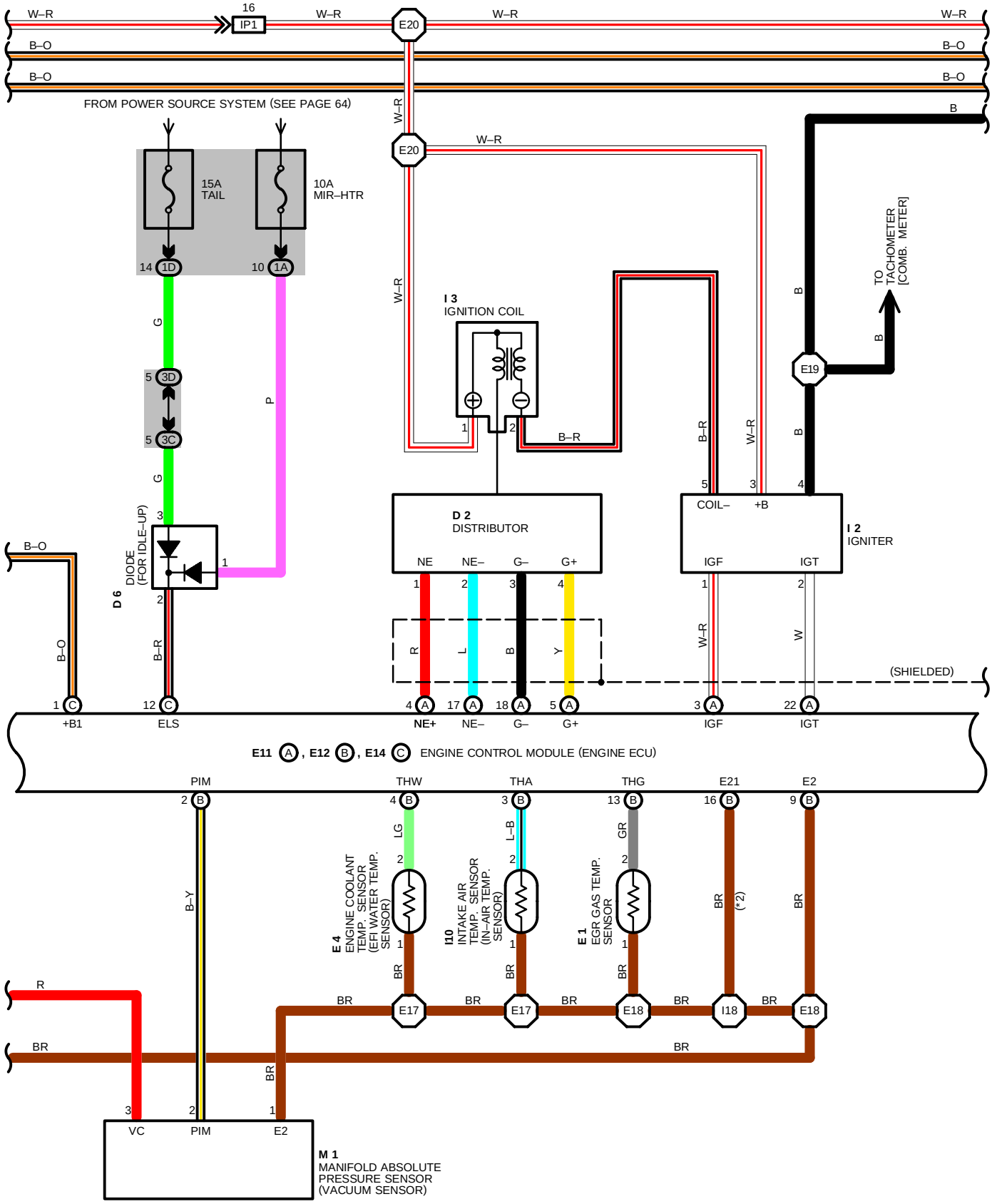
W–R
16
IP1
W–R
E20
W–R
W–R
B–O
B–O
B–O
B–O
FROM POWER SOURCE SYSTEM (SEE PAGE 64)
W–R
E20
W–R
B
15A
TAIL
10A
MIR–HTR
14 1D
10 1A
W–R
I 3
IGNITION COIL
TO
TACHOMETER
[COMB. METER]
G
5 3D
5 3C
P
B
B
E19
B
G
3
1
2
B–R
B–R
W–R
5
3
4
COIL–
+B
I 2
IGNITER
D 2
DISTRIBUTOR
B–O
D 6
DIODE
(FOR IDLE–UP)
NE
NE–
G–
G+
IGF
IGT
1
2
3
4
1
2
R
L
B
Y
W–R
W
B–O
B–R
(SHIELDED)
1 C
12 C
4 A
17 A
18 A
5 A
3 A
22 A
+B1
ELS
NE+
NE–
G–
G+
IGF
IGT
E11 A , E12 B , E14 C ENGINE CONTROL MODULE (ENGINE ECU)
PIM
THW
THA
THG
E21
E2
2 B
4 B
3 B
13 B
16 B
9 B
LG
L–B
GR
B–Y
E 4
ENGINE COOLANT
TEMP. SENSOR
(EFI WATER TEMP.
SENSOR)
I10
INTAKE AIR
TEMP. SENSOR
(IN–AIR TEMP.
SENSOR)
E 1
EGR GAS TEMP.
SENSOR
BR
(*2)
BR
R
BR
BR
BR
BR
BR
BR
BR
BR
E17
E17
E18
I18
E18
3
2
1
VC
PIM
E2
M 1
MANIFOLD ABSOLUTE
PRESSURE SENSOR
(VACUUM SENSOR)

ENGINE CONTROL (5S–FE M/T EX. CALIFORNIA)

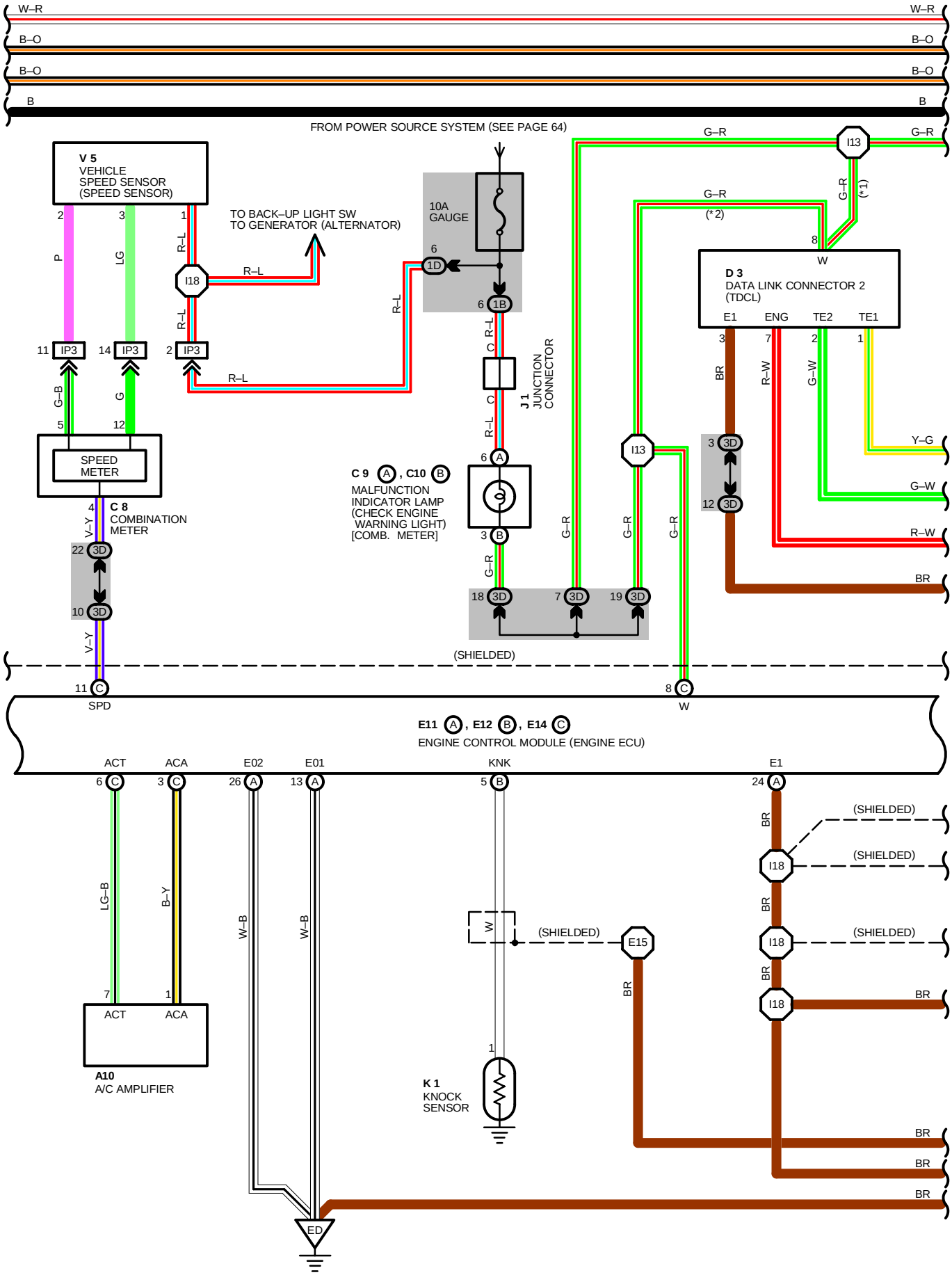

*1 : TMC MADE
*2 : TMM MADE

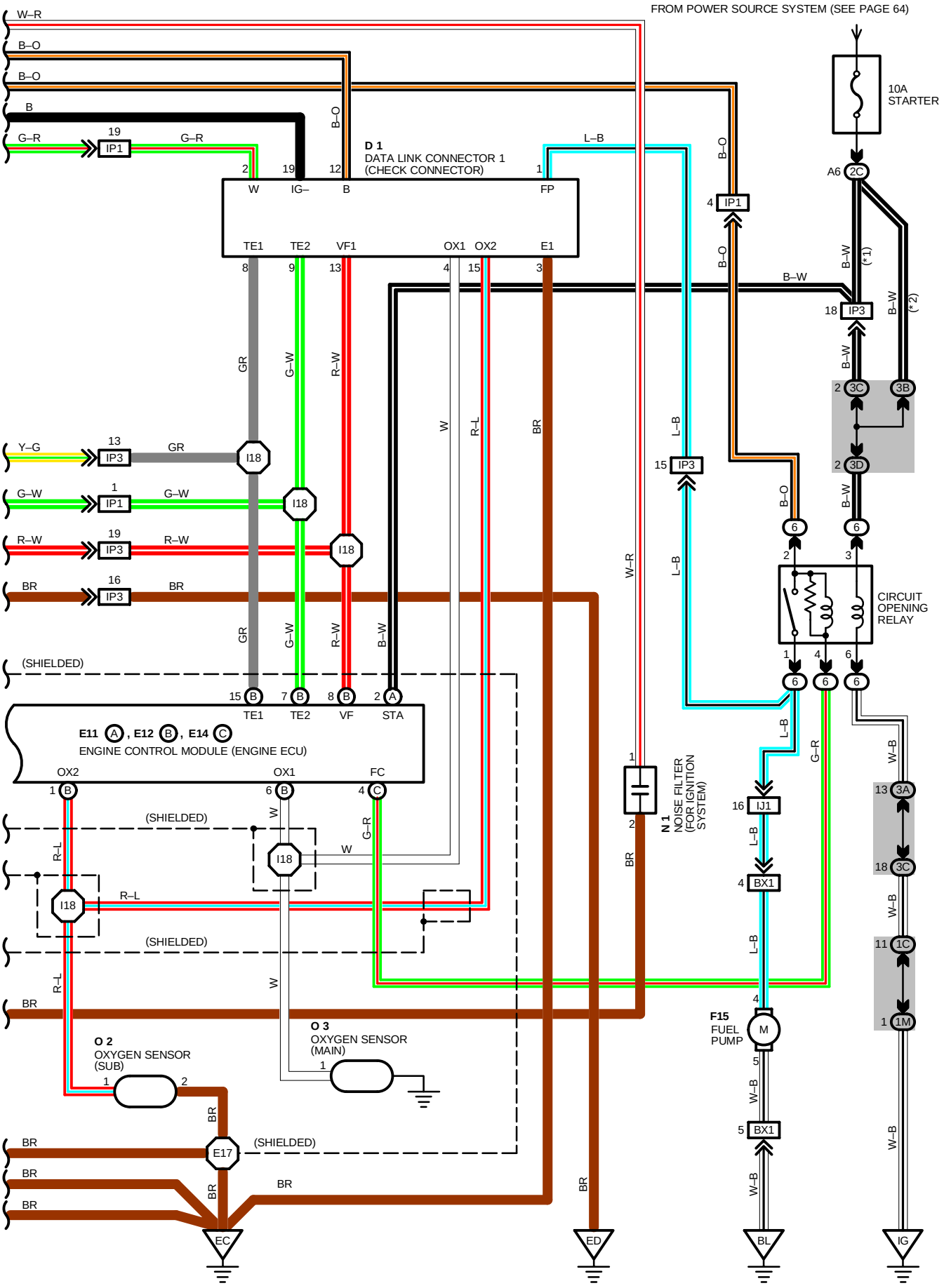

ENGINE CONTROL (5S–FE M/T EX. CALIFORNIA)

SERVICE HINTS

E11(A), E12(B), E14(C) ENGINE CONTROL MODULE (ENGINE ECU)

VOLTAGE AT ENGINE CONTROL MODULE (ECU) WIRING CONNECTOR

BATT – E1 : ALWAYS **9.0–14.0** VOLTS
+B – E1 : **9.0–14.0** VOLTS (IGNITION SW AT **ON** POSITION)
+B1 – E1 : **9.0–14.0** VOLTS (IGNITION SW AT **ON** POSITION)
IDL – E1 : **9.0–14.0** VOLTS (IGNITION SW ON AND THROTTLE VALVE OPEN)
PIM – E2 : **3.3– 3.9** VOLTS (IGNITION SW AT **ON** POSITION)
#10, #20 – E01, E02 : **9.0–14.0** VOLTS (IGNITION SW AT **ON** POSITION)
THA – E2 : **0.5– 3.4** VOLTS (IGNITION SW ON AND INTAKE AIR TEMP. **20**˚C, **68**˚F)
THW – E2 : **0.2– 1.0** VOLTS (IGNITION SW ON AND COOLANT TEMP. **80**˚C, **176**˚F)
STA – E1 : **6.0–14.0** VOLTS (ENGINE CRANKING)
IGT – E1 : **0.8–1.2** VOLTS (ENGINE CRANKING OR IDLING)
ISCC, ISCO– E1 : **8.0–14.0** VOLTS (IGNITION SW AT **ON** POSITION)
W – E1 : **9.0–14.0** VOLTS (IGNITION SW ON, NO TROUBLE AND ENGINE RUNNING)
ACT – E1 : **9.0–14.0** VOLTS (IGNITION SW ON AND AIR CONDITIONING ON)
ACA – E1 : **7.5–14.0** VOLTS (IGNITION SW ON AND AIR CONDITIONING ON)
TE1 – E1 : **9.0–14.0** VOLTS (IGNITION SW ON)

RESISTANCE AT ENGINE CONTROL MODULE (ECU) WIRING CONNECTORS

(DISCONNECT WIRING CONNECTOR)

IDL – E1 : INFINITY (THROTTLE VALVE OPEN)
0 Ω (THROTTLE VALVE FULLY CLOSED)
THA – E2 : **2.0 –3.0** KΩ (INTAKE AIR TEMP. **20**˚C, **68**˚F)
THW – E2 : **0.2 –0.4** KΩ (COOLANT TEMP. **80**˚C, **176**˚F)
G+ – G– : **0.17–0.21** KΩ
ISCC, ISCO– +B, +B1 : **19.3–22.3** KΩ

: PARTS LOCATION

CODE	SEE PAGE	CODE	SEE PAGE	CODE	SEE PAGE
A10	32	**E14** C	30	**K 1**	31
C 8	32	**F15**	34 (S/D), 35 (C/P), 36 (W/G)	**M 1**	31
C 9 A	32	**I 1**	31	**N 1**	31
C10 B	32	**I 2**	31	**O 2**	31
D 1	30	**I 3**	31	**O 3**	31
D 2	30	**I 4**	31	**T 1**	31
D 3	32	**I 5**	31	**V 1**	31
D 6	32	**I 6**	31	**V 2**	31
E 1	30	**I 7**	31	**V 3**	31
E 4	30	**I10**	31	**V 5**	31
E11 A	30	**I12**	33		
E12 B	30	**J 1**	33		

: RELAY BLOCKS

CODE	SEE PAGE	RELAY BLOCKS (RELAY BLOCK LOCATION)
6	26	R/B NO. 6 (BEHIND GLOVE BOX)

: JUNCTION BLOCK AND WIRE HARNESS CONNECTOR

CODE	SEE PAGE	JUNCTION BLOCK AND WIRE HARNESS (CONNECTOR LOCATION)
1A	20	COWL WIRE AND J/B NO. 1 (INSTRUMENT PANEL LEFT)
1B		
1C		
1D		
1G		
1M		
2A	22	ENGINE ROOM MAIN WIRE AND J/B NO. 2 (ENGINE COMPARTMENT LEFT)
2C	22	ENGINE WIRE AND J/B NO. 2 (ENGINE COMPARTMENT LEFT)
3A	24	COWL WIRE AND J/B NO. 3 (BEHIND COMBINATION METER)
3C		
3D		

: CONNECTOR JOINING WIRE HARNESS AND WIRE HARNESS

CODE	SEE PAGE	JOINING WIRE HARNESS AND WIRE HARNESS (CONNECTOR LOCATION)
IJ1	42	FLOOR NO. 1 WIRE AND COWL WIRE
IP1	44	ENGINE WIRE AND COWL WIRE
IP3		
BX1	46 (S/D)	FUEL GAUGE WIRE AND FLOOR NO. 1 WIRE
	48 (C/P)	
	50 (W/G)	

: GROUND POINTS

CODE	SEE PAGE	GROUND POINTS LOCATION
EB	40 (5S–FE)	FRONT LEFT FENDER
EC	40 (5S–FE)	INTAKE MANIFOLD RH
ED	40 (5S–FE)	INTAKE MANIFOLD LH
IG	42	INSTRUMENT PANEL BRACE LH
BL	46 (S/D)	UNDER THE LEFT QUARTER PILLAR
	48 (C/P)	
	50 (W/G)	

: SPLICE POINTS

CODE	SEE PAGE	WIRE HARNESS WITH SPLICE POINTS	CODE	SEE PAGE	WIRE HARNESS WITH SPLICE POINTS
E15	40 (5S–FE)	ENGINE WIRE	**E20**	40 (5S–FE)	ENGINE WIRE
E16			**I13**	44	COWL WIRE
E17			**I18**	44	ENGINE WIRE
E18			**I20**	44	COWL WIRE
E19			**I23**		

HEADLIGHT (FOR USA)

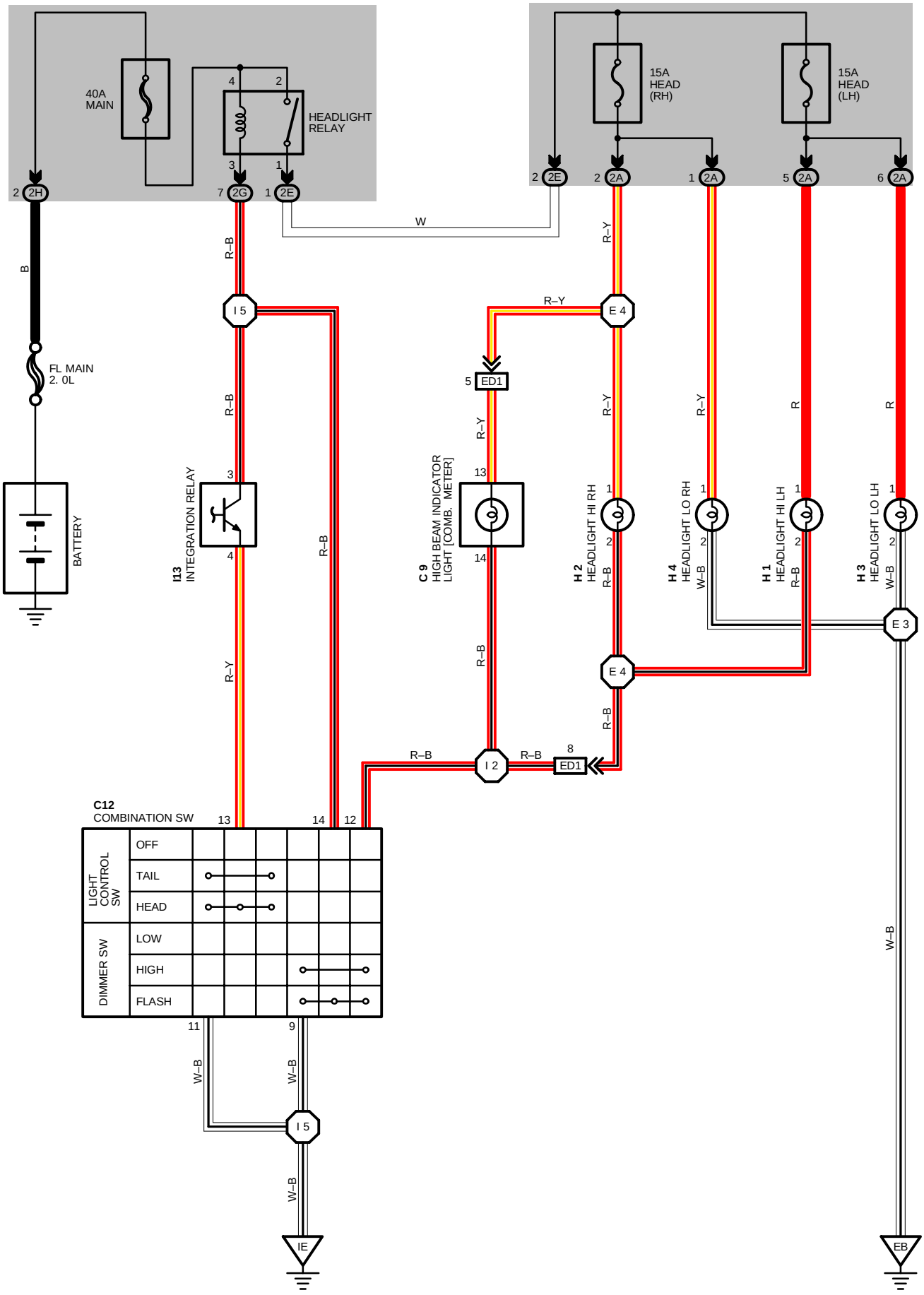

SERVICE HINTS

HEADLIGHT RELAY

2–1 : CLOSED WITH LIGHT CONTROL SW AT **HEAD** POSITION OR DIMMER SW AT **FLASH** POSITION

LIGHT AUTO TURN OFF OPERATION

PLEASE REFER TO THE LIGHT AUTO TURN OFF SYSTEM (SEE PAGE 102)

: PARTS LOCATION

CODE	SEE PAGE	CODE	SEE PAGE	CODE	SEE PAGE
C 9	32	**H 2**	28 (1MZ–FE), 30 (5S–FE)	**I13**	33
C12	32	**H 3**	28 (1MZ–FE), 30 (5S–FE)		
H 1	28 (1MZ–FE), 30 (5S–FE)	**H 4**	28 (1MZ–FE), 30 (5S–FE)		

: JUNCTION BLOCK AND WIRE HARNESS CONNECTOR

CODE	SEE PAGE	JUNCTION BLOCK AND WIRE HARNESS (CONNECTOR LOCATION)
2A	22	ENGINE ROOM MAIN WIRE AND J/B NO. 2 (ENGINE COMPARTMENT LEFT)
2E		
2G	22	COWL WIRE AND J/B NO. 2 (ENGINE COMPARTMENT LEFT)
2H	22	ENGINE WIRE AND J/B NO. 2 (ENGINE COMPARTMENT LEFT)

: CONNECTOR JOINING WIRE HARNESS AND WIRE HARNESS

CODE	SEE PAGE	JOINING WIRE HARNESS AND WIRE HARNESS (CONNECTOR LOCATION)
ED1	38 (1MZ–FE)	COWL WIRE AND ENGINE ROOM MAIN WIRE
	40 (5S–FE)	

: GROUND POINTS

CODE	SEE PAGE	GROUND POINTS LOCATION
EB	38 (1MZ–FE)	FRONT LEFT FENDER
	40 (5S–FE)	
IE	42	LEFT KICK PANEL

: SPLICE POINTS

CODE	SEE PAGE	WIRE HARNESS WITH SPLICE POINTS	CODE	SEE PAGE	WIRE HARNESS WITH SPLICE POINTS
E 3	38 (1MZ–FE)	ENGINE ROOM MAIN WIRE	**E 4**	40 (5S–FE)	ENGINE ROOM MAIN WIRE
	40 (5S–FE)		**I 2**	44	COWL WIRE
E 4	38 (1MZ–FE)		**I 5**		

C 9

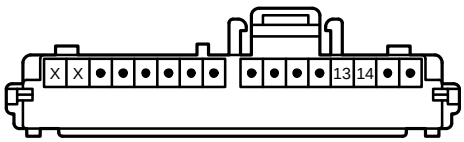

C12 BLACK

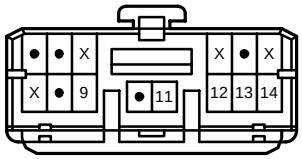

H 1, H 2 BLACK



H 3, H 4 BROWN



I13

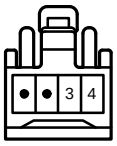

HEADLIGHT (FOR CANADA)

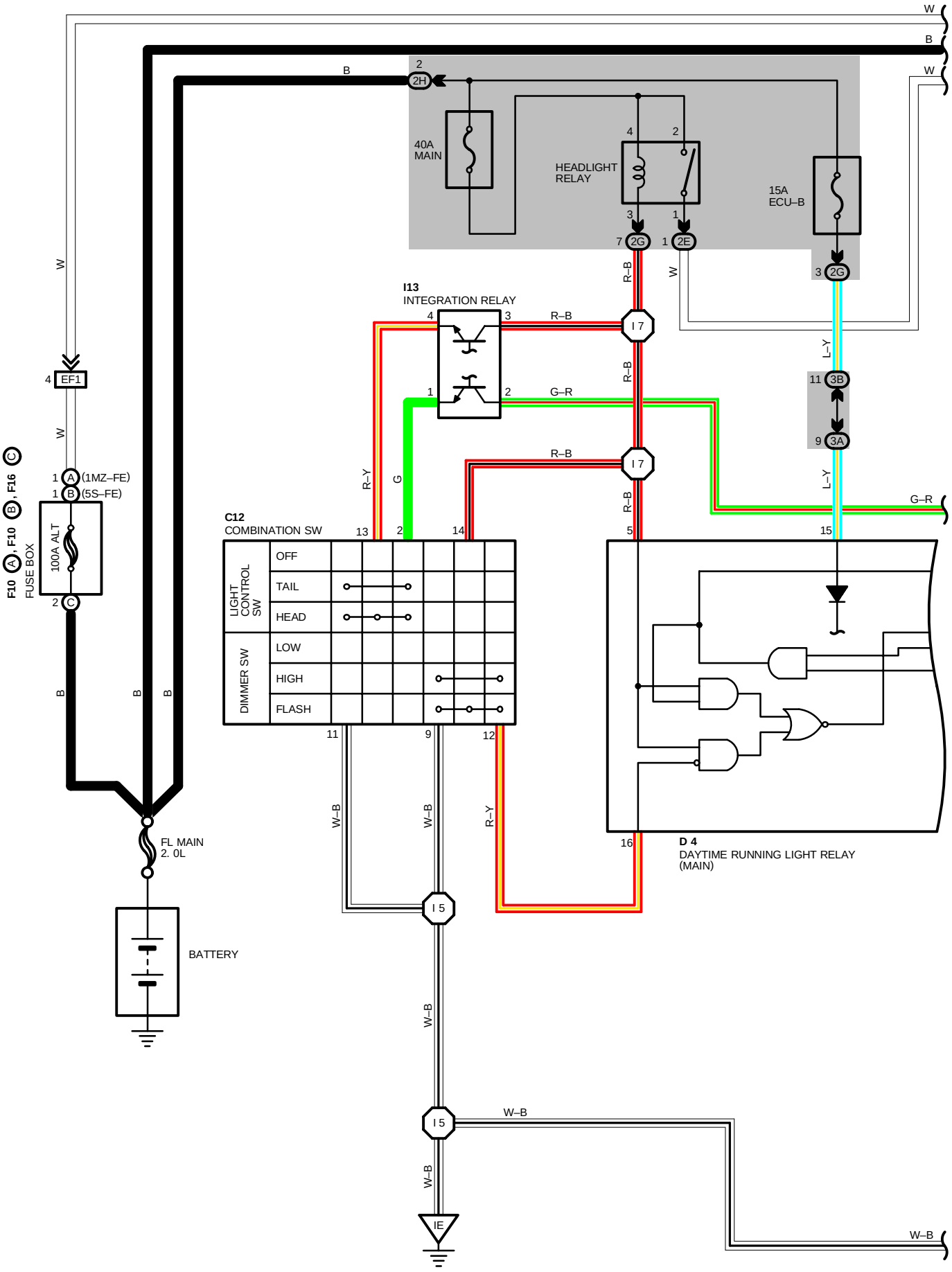

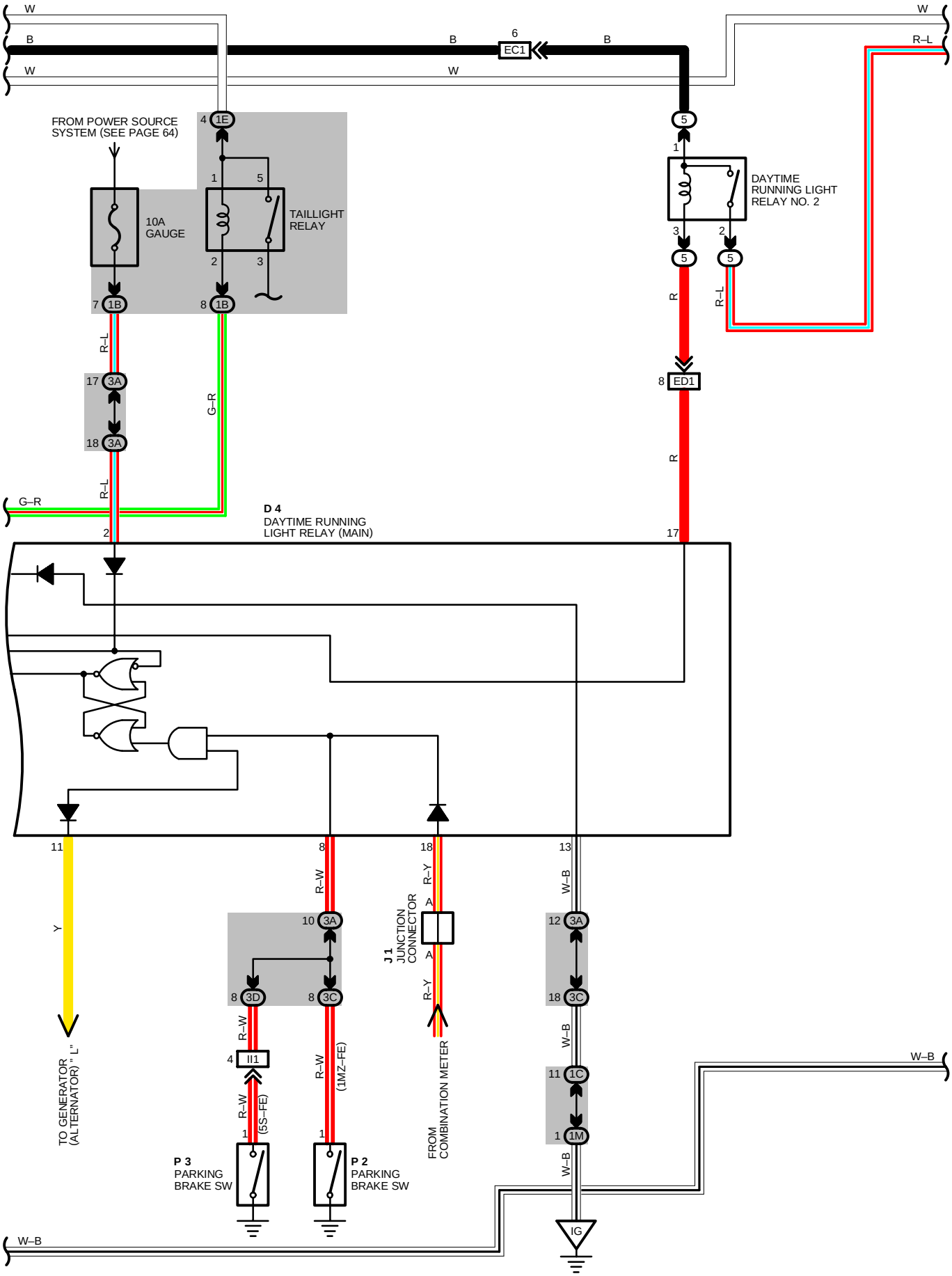
W
B
W
B
6
EC1
B
W
W
R–L
FROM POWER SOURCE SYSTEM (SEE PAGE 64)
4 1E
1
5
10A GAUGE
TAILLIGHT RELAY
2
3
7 1B
8 1B
R–L
17 3A
18 3A
G–R
R–L
G–R
2
D 4
DAYTIME RUNNING LIGHT RELAY (MAIN)
5
1
DAYTIME RUNNING LIGHT RELAY NO. 2
3
2
5
5
R
R–L
8 ED1
R
17
11
Y
TO GENERATOR (ALTERNATOR) " L "
8
R–W
10 3A
8 3D
8 3C
R–W
4 II1
R–W
(5S–FE)
1
P 3
PARKING BRAKE SW
R–W
(1MZ–FE)
1
P 2
PARKING BRAKE SW
18
R–Y
A
J 1
JUNCTION CONNECTOR
A
R–Y
FROM COMBINATION METER
13
W–B
12 3A
18 3C
W–B
11 1C
1 1M
W–B
IG
W–B
W–B

HEADLIGHT (FOR CANADA)

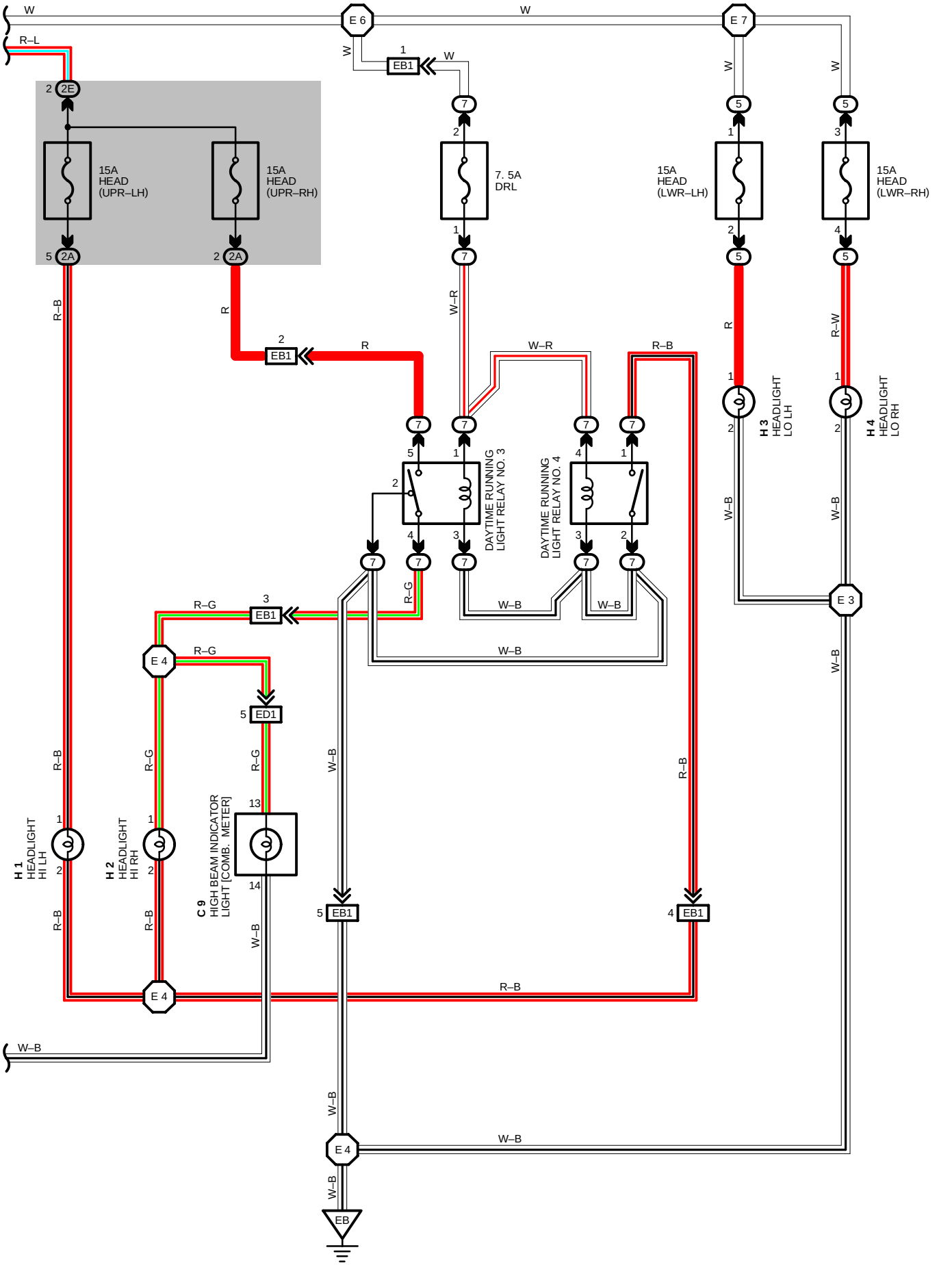

SYSTEM OUTLINE

CURRENT FROM THE BATTERY IS ALWAYS FLOWING FROM THE FL MAIN → HEADLIGHT RELAY (COIL SIDE) → **TERMINAL 5** OF THE DAYTIME RUNNING LIGHT RELAY (MAIN) AND **TERMINAL 14** OF THE DIMMER SW, HEADLIGHT RELAY (COIL SIDE) → **TERMINAL 3** OF THE INTEGRATION RELAY → **TERMINAL 4** → **TERMINAL 13** OF THE LIGHT CONTROL SW, FL MAIN → DAYTIME RUNNING LIGHT RELAY NO. 2 (COIL SIDE) → **TERMINAL 17** OF THE DAYTIME RUNNING LIGHT RELAY.

1. DAYTIME RUNNING LIGHT OPERATION

WHEN THE ENGINE IS STARTED, VOLTAGE GENERATED AT **TERMINAL L** OF THE GENERATOR (ALTERNATOR) IS APPLIED TO **TERMINAL 11** OF THE DAYTIME RUNNING LIGHT RELAY (MAIN).

IF THE PARKING BRAKE LEVER IS PULLED UP (PARKING BRAKE SW ON) AT THIS TIME, THE RELAY IS NOT ENERGIZED, SO THE DAYTIME RUNNING LIGHT SYSTEM DOES NOT OPERATE. IF THE PARKING BRAKE LEVER IS RELEASED (PARKING BRAKE LEVER SW OFF), THE SIGNAL IS INPUT TO **TERMINAL 8** OF THE RELAY. THIS ACTIVATES THE RELAY ALSO, CURRENT FROM FL MAIN FLOWES TO DAYTIME RUNNING LIGHT RELAY NO. 2 (POINT SIDE) → **HEAD (UPR–LH)** FUSE → **TERMINAL 1** OF THE HEAD LH–HI → **TERMINAL 2** → **TERMINAL 2** OF THE HEAD RH–HI → **TERMINAL 1** → **TERMINAL 4** OF THE DAYTIME RUNNING LIGHT RELAY NO. 3 → **TERMINAL 2** → TO **GROUND**, SO BOTH TAIL AND HEADLIGHT UP.

THIS IS HOW THE DAYTIME RUNNING LIGHT SYSTEM OPERATES. ONCE THE DAYTIME RUNNING LIGHT SYSTEM OPERATES AND HEAD HAVE LIGHT UP, HEAD REMAIN ON EVEN IF THE PARKING BRAKE LEVER IS PULLED UP (PARKING BRAKE SW ON).

EVEN IF THE ENGINE STALLS WITH THE IGNITION SW ON AND THERE IS NO VOLTAGE FROM **TERMINAL L** OF THE GENERATOR (ALTERNATOR), HEAD REMAIN ON. IF THE IGNITION SW IS THEN TURNED OFF, AND HEAD ARE TURNED OFF.

IF THE ENGINE IS STARTED WHILE THE PARKING BRAKE LEVER IS RELEASED (PARKING BRAKE SW OFF), THE DAYTIME RUNNING LIGHT SYSTEM OPERATES AND TAIL, HEADLIGHT UP AS THE ENGINE STARTS.

2. HEADLIGHT OPERATION

*(WHEN THE LIGHT CONTROL SW AT THE HEAD POSITION)

WHEN THE LIGHT CONTROL SW IS SET TO **HEAD** POSITION, THE CURRENT FLOWING TO THE HEADLIGHT RELAY (COIL SIDE) FLOWS TO **TERMINAL 3** OF THE INTEGRATION RELAY → **TERMINAL 4** → **TERMINAL 13** OF THE LIGHT CONTROL SW → **TERMINAL 11** → **GROUND**, TURNING THE HEADLIGHT RELAY ON.

THIS CAUSES THE CURRENT FLOWING TO THE HEADLIGHT RELAY (POINT SIDE) → **DRL** FUSE → DAYTIME RUNNING LIGHT RELAY NO. 3 (COIL SIDE) AND DAYTIME RUNNING LIGHT RELAY NO. 4 (COIL SIDE) → **GROUND**, TURNING THE DAYTIME RUNNING LIGHT RELAY NO. 3 AND NO. 4 ON. ALSO, CURRENT FROM THE HEADLIGHT RELAY (POINT SIDE) TO **HEAD (LWR)** FUSES → **TERMINAL 1** OF THE HEADLIGHTS (LO) → **TERMINAL 2** → **GROUND**, SO THE HEADLIGHTS (LO) LIGHT UP.

*(DIMMER SW AT FLASH POSITION)

WHEN THE DIMMER SW IS SET TO **FLASH** POSITION, CURRENT FLOWS FROM HEADLIGHT RELAY (COIL SIDE) → **TERMINAL 14** OF THE DIMMER SW → **TERMINAL 9** → **GROUND**, TURNING THE HEADLIGHT RELAY ON. AT THE SAME TIME, SIGNALS ARE OUTPUT FROM **TERMINAL 12** AND **TERMINAL 14** OF THE DIMMER SW TO **TERMINAL 16** AND **TERMINAL 5** OF THE DAYTIME RUNNING LIGHT RELAY (MAIN), ACTIVATING THE DAYTIME RUNNING LIGHT RELAY (MAIN) AND ALSO THE DAYTIME RUNNING LIGHT RELAY NO. 2. WHEN THE HEADLIGHT RELAY AND DAYTIME RUNNING LIGHT RELAY (MAIN) ARE ACTIVATED, THE HEADLIGHTS (LO AND HI) THEN LIGHT UP.

*(DIMMER SW AT HIGH POSITION)

WHEN THE LIGHT CONTROL SW IS SET TO **HEAD** POSITION, A SIGNAL IS OUTPUT FROM **TERMINAL 13** OF THE LIGHT CONTROL SW → **TERMINAL 4** OF THE INTEGRATION RELAY → **TERMINAL 3** → **TERMINAL 5** OF THE DAYTIME RUNNING LIGHT RELAY (MAIN). WHEN THE DIMMER SW IS SET TO **HIGH** POSITION, A SIGNAL IS OUTPUT FROM **TERMINAL 12** OF THE DIMMER SW TO **TERMINAL 16** OF THE DAYTIME RUNNING LIGHT RELAY (MAIN). THESE SIGNALS ACTIVATE DAYTIME RUNNING LIGHT RELAY NO. 2, SO CURRENT FLOWS FROM DAYTIME RUNNING LIGHT RELAY NO. 2 (POINT SIDE) → **HEAD (UPR–LH)** FUSE → **TERMINAL 1** OF THE HEADLIGHT LH–HI → **TERMINAL 2** → DAYTIME RUNNING LIGHT RELAY NO. 4 (POINT SIDE) → **GROUND**, AND CURRENT ALSO SIMUTANEOUSLY FLOWS FROM **HEAD (UPR–RH)** FUSE → DAYTIME RUNNING LIGHT RELAY NO. 3 (POINT SIDE) → **TERMINAL 1** OF THE HEADLIGHT RH–HI → **TERMINAL 2** → DAYTIME RUNNING LIGHT RELAY NO. 4 (POINT SIDE), CAUSING THE HEADLIGHTS (HI SIDE) TO LIGHT UP.

SERVICE HINTS

D 4 DAYTIME RUNNING LIGHT RELAY (MAIN)

2–GROUND : APPROX. **12** VOLTS WITH THE IGNITION SW AT **ON** POSITION
15–GROUND : ALWAYS APPROX. **12** VOLTS
8–GROUND : CONTINUITY WITH THE PARKING BRAKE LEVER PULLED UP (PARKING BRAKE SW ON)
13–GROUND : ALWAYS CONTINUITY

HEADLIGHT (FOR CANADA)

: PARTS LOCATION

CODE		SEE PAGE	CODE		SEE PAGE	CODE	SEE PAGE
C 9		32	**F16**	C	28 (1MZ–FE), 30 (5S–FE)	**I13**	33
C12		32	**H 1**		28 (1MZ–FE), 30 (5S–FE)	**J 1**	33
D 4		32	**H 2**		28 (1MZ–FE), 30 (5S–FE)	**P 2**	33
F10	A	28 (1MZ–FE), 30 (5S–FE)	**H 3**		28 (1MZ–FE), 30 (5S–FE)	**P 3**	33
	B	28 (1MZ–FE), 30 (5S–FE)	**H 4**		28 (1MZ–FE), 30 (5S–FE)		

: JUNCTION BLOCK AND WIRE HARNESS CONNECTOR

CODE	SEE PAGE	JUNCTION BLOCK AND WIRE HARNESS (CONNECTOR LOCATION)
1B	20	COWL WIRE AND J/B NO. 1 (INSTRUMENT PANEL LEFT)
1C		
1D		
1E		
1M		
2A	22	ENGINE ROOM MAIN WIRE AND J/B NO. 2 (ENGINE COMPARTMENT LEFT)
2E		
2G	22	COWL WIRE AND J/B NO. 2 (ENGINE COMPARTMENT LEFT)
2H	22	ENGINE WIRE AND J/B NO. 2 (ENGINE COMPARTMENT LEFT)
3A	24	COWL WIRE AND J/B NO. 3 (BEHIND COMBINATION METER)
3B		
3C		
3D		

: CONNECTOR JOINING WIRE HARNESS AND WIRE HARNESS

CODE	SEE PAGE	JOINING WIRE HARNESS AND WIRE HARNESS (CONNECTOR LOCATION)
EB1	38 (1MZ–FE)	ENGINE ROOM MAIN WIRE AND RELAY WIRE
	40 (5S–FE)	
EC1	38 (1MZ–FE)	ENGINE WIRE AND ENGINE ROOM MAIN WIRE
	40 (5S–FE)	
ED1	38 (1MZ–FE)	COWL WIRE AND ENGINE ROOM MAIN WIRE
	40 (5S–FE)	
EF1	38 (1MZ–FE)	ENGINE WIRE AND COWL WIRE
	40 (5S–FE)	
II1	42	COWL WIRE AND INSTRUMENT PANEL WIRE

: GROUND POINTS

CODE	SEE PAGE	GROUND POINTS LOCATION
EB	38 (1MZ–FE)	FRONT LEFT FENDER
	40 (5S–FE)	
IE	42	LEFT KICK PANEL
IG	42	INSTRUMENT PANEL BRACE LH

: SPLICE POINTS

CODE	SEE PAGE	WIRE HARNESS WITH SPLICE POINTS	CODE	SEE PAGE	WIRE HARNESS WITH SPLICE POINTS
E 3	38 (1MZ–FE)	ENGINE ROOM MAIN WIRE	**E 6**	40 (5S–FE)	ENGINE ROOM MAIN WIRE
	40 (5S–FE)		**E 7**	38 (1MZ–FE)	
E 4	38 (1MZ–FE)			40 (5S–FE)	
	40 (5S–FE)		**I 5**	44	COWL WIRE
E 6	38 (1MZ–FE)		**I 7**		

C 9

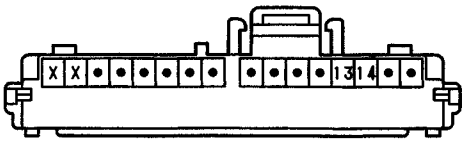

C12 BLACK

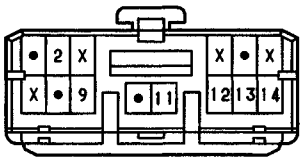

D 4 GRAY

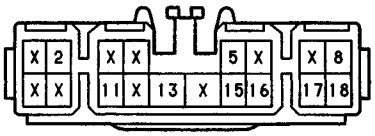

(1MZ-FE) F10 Ⓐ

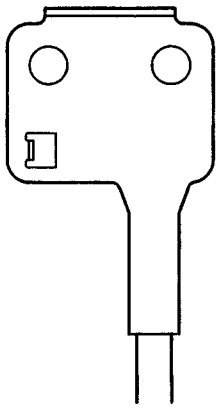

(5S-FE) F10 Ⓑ



F16 Ⓒ



H 1, H 2 BLACK



H 3, H 4 BROWN



I13

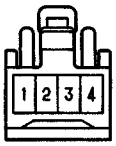

J 1 DARK GRAY

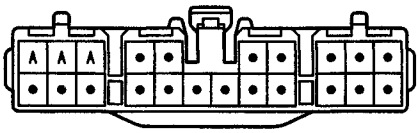

(HINT:SEE PAGE 7)

P 2



P 3



LIGHT AUTO TURN OFF

*1 : 1MZ–FE
*2 : 5S–FE

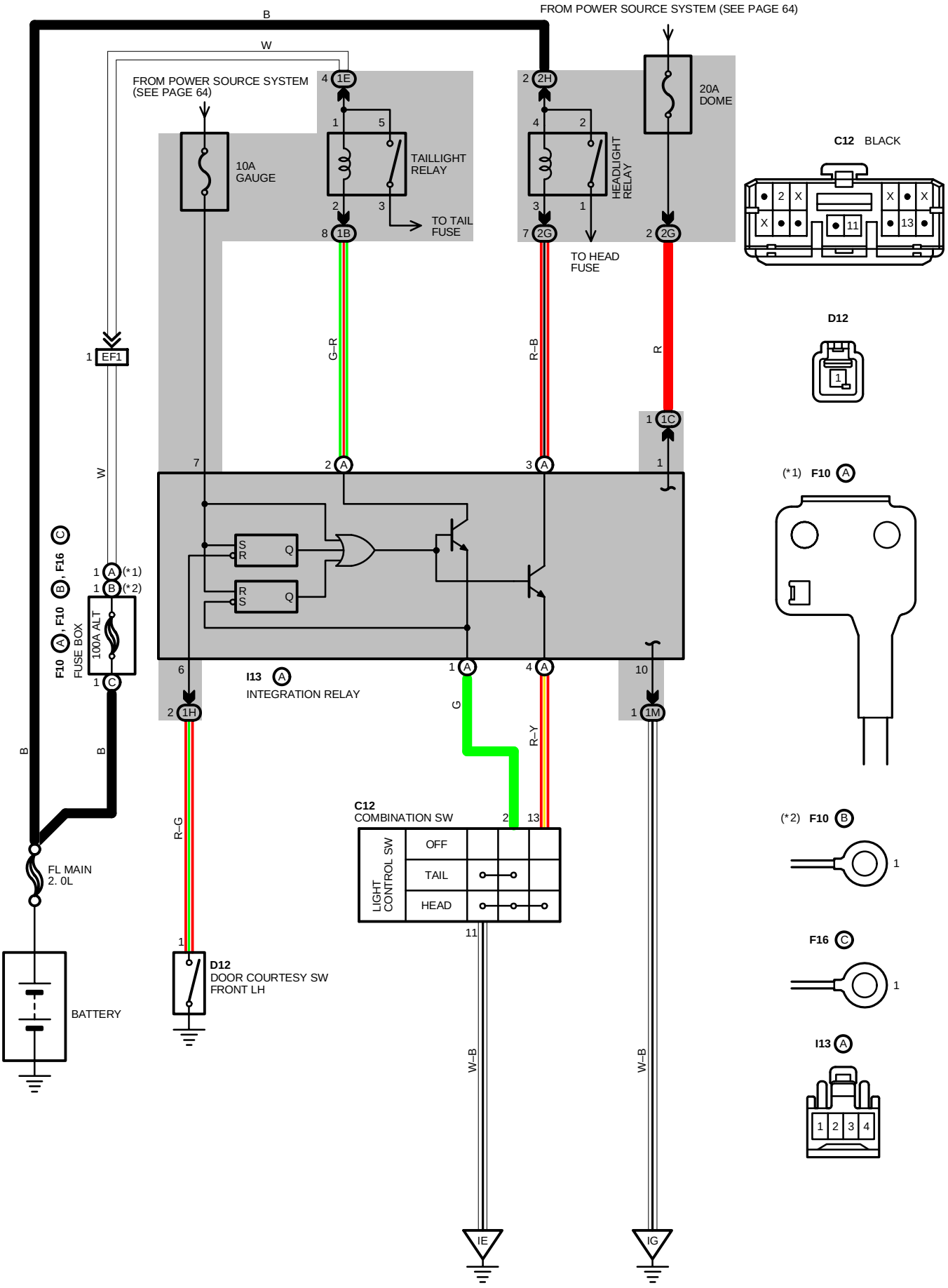

SYSTEM OUTLINE

WITH THE IGNITION SW TURNED ON, THE CURRENT FLOWS TO **TERMINAL 7** OF THE INTEGRATION RELAY THROUGH **GAUGE** FUSE.

VOLTAGE IS APPLIED AT ALL TIMES TO **TERMINAL (A) 2** OF THE INTEGRATION RELAY THROUGH THE TAILLIGHT RELAY (COIL SIDE), AND TO **TERMINAL (A) 3** THROUGH THE HEADLIGHT RELAY (COIL SIDE).

1. NORMAL LIGHTING OPERATION

(TURN TAILLIGHT ON)

WITH LIGHT CONTROL SW TURNED TO **TAILLIGHT** POSITION, A SIGNAL IS INPUT INTO **TERMINAL (A) 1** OF THE INTEGRATION RELAY. ACCORDING TO THIS SIGNAL, THE CURRENT FLOWING TO **TERMINAL (A) 2** OF THE RELAY FLOWS FROM **TERMINAL (A) 1** → **TERMINAL 2** OF THE LIGHT CONTROL SW → **TERMINAL 11** → TO **GROUND** AND TAILLIGHT RELAY CAUSES TAILLIGHT TO TURN ON.

(TURN HEADLIGHT ON)

WITH LIGHT CONTROL SW TURNED TO **HEADLIGHT** POSITION, A SIGNAL IS INPUT INTO **TERMINALS (A) 1** AND **(A) 4** OF THE INTEGRATION RELAY. ACCORDING TO THIS SIGNAL, THE CURRENT FLOWING TO **TERMINAL (A) 3** OF THE RELAY FLOWS TO **TERMINAL (A) 4** → **TERMINAL 13** OF THE LIGHT CONTROL SW → **TERMINAL 11** → TO **GROUND** IN THE HEADLIGHT CIRCUIT, AND CAUSES TAILLIGHT AND HEADLIGHT RELAY TO TURN THE LIGHT ON. THE TAILLIGHT CIRCUIT IS SAME AS ABOVE.

2. LIGHT AUTO TURN OFF OPERATION

WITH LIGHTS ON AND IGNITION SW TURNED OFF (INPUT SIGNAL GOES TO **TERMINAL 7** OF THE RELAY), WHEN DOOR ON DRIVER'S SIDE IS OPENED (INPUT SIGNAL GOES TO **TERMINAL 6** OF THE RELAY), THE RELAY OPERATES AND THE CURRENT IS CUT OFF WHICH FLOWS FROM **TERMINAL (A) 2** OF THE RELAY TO **TERMINAL (A) 1** IN TAILLIGHT CIRCUIT AND FROM **TERMINAL (A) 3** TO **TERMINAL (A) 4** IN HEADLIGHT CIRCUIT. AS A RESULT, ALL LIGHTS ARE TURNED OFF AUTOMATICALLY.

SERVICE HINTS

I13 INTEGRATION RELAY

7–GROUND : APPROX. **12** VOLTS WITH IGNITION SW AT **ON** POSITION
1–GROUND : ALWAYS APPROX. **12** VOLTS
(A) 3–GROUND : APPROX. **12** VOLTS WITH LIGHT CONTROL SW AT **OFF** OR **TAIL** POSITION
(A) 2–GROUND : APPROX. **12** VOLTS WITH LIGHT CONTROL SW AT **OFF** POSITION
6–GROUND : CONTINUITY WITH FRONT LH DOOR OPEN
(A) 4–GROUND : CONTINUITY WITH LIGHT CONTROL SW AT **HEAD** POSITION
(A) 1–GROUND : CONTINUITY WITH LIGHT CONTROL SW AT **TAIL** OR **HEAD** POSITION
10–GROUND : ALWAYS CONTINUITY

○ : PARTS LOCATION

CODE	SEE PAGE	CODE		SEE PAGE	CODE		SEE PAGE
C12	32	**F10**	A	28 (1MZ–FE), 30 (5S–FE)	**F16**	C	28 (1MZ–FE), 30 (5S–FE)
D12	34 (S/D), 35 (C/P), 36 (W/G)		B	28 (1MZ–FE), 30 (5S–FE)	**I13**	A	33

⬭ : JUNCTION BLOCK AND WIRE HARNESS CONNECTOR

CODE	SEE PAGE	JUNCTION BLOCK AND WIRE HARNESS (CONNECTOR LOCATION)
1B	20	COWL WIRE AND J/B NO. 1 (INSTRUMENT PANEL LEFT)
1C		
1E		
1H	20	FLOOR NO. 1 WIRE J/B NO. 1 (INSTRUMENT PANEL LEFT)
1M	20	COWL WIRE AND J/B NO. 1 (INSTRUMENT PANEL LEFT)
2G	22	COWL WIRE AND J/B NO. 2 (ENGINE COMPARTMENT LEFT)
2H	22	ENGINE WIRE AND J/B NO. 2 (ENGINE COMPARTMENT LEFT)

▭ : CONNECTOR JOINING WIRE HARNESS AND WIRE HARNESS

CODE	SEE PAGE	JOINING WIRE HARNESS AND WIRE HARNESS (CONNECTOR LOCATION)
EF1	38 (1MZ–FE)	ENGINE WIRE AND COWL WIRE
	40 (5S–FE)	

▽ : GROUND POINTS

CODE	SEE PAGE	GROUND POINTS LOCATION
IE	42	LEFT KICK PANEL
IG	42	INSTRUMENT PANEL BRACE LH

TURN SIGNAL AND HAZARD WARNING LIGHT (S/D, C/P)

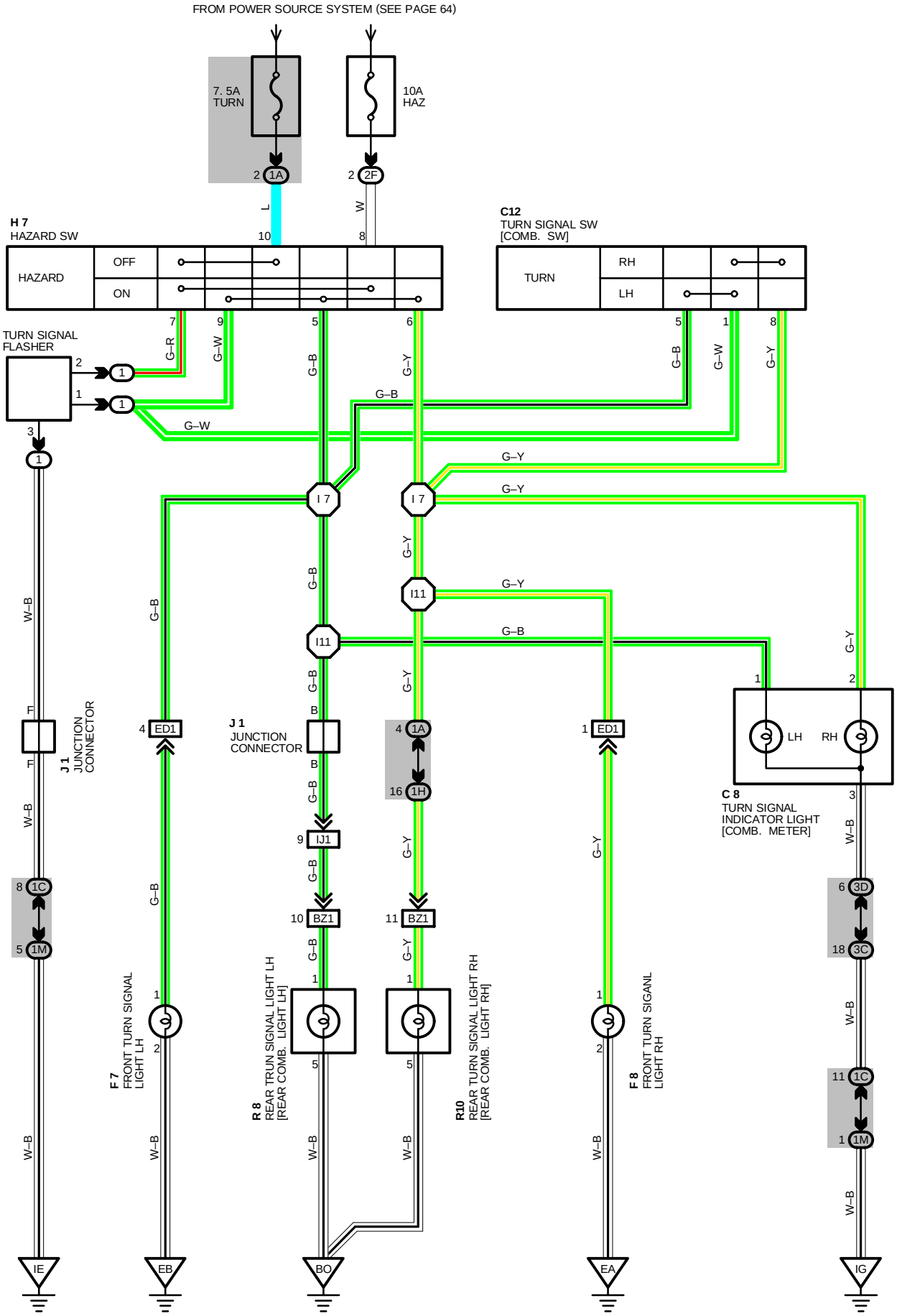

SERVICE HINTS

TURN SIGNAL FLASHER

(1) 2–GROUND : APPROX. **12** VOLTS WITH IGNITION SW ON OR HAZARD SW ON

(1) 1–GROUND : CHANGES FROM APPROX. **12** TO **0** VOLTS WITH IGNITION SW ON AND TURN SIGNAL SW LEFT OR RIGHT, OR HAZARD SW ON

(1) 3–GROUND: ALWAYS CONTINUITY

: PARTS LOCATION

CODE	SEE PAGE	CODE	SEE PAGE	CODE	SEE PAGE
C 8	32	**F 8**	28 (1MZ–FE), 30 (5S–FE)	**R 8**	34 (S/D), 35 (C/P)
C12	32	**H 7**	33	**R10**	34 (S/D), 35 (C/P)
F 7	28 (1MZ–FE), 30 (5S–FE)	**J 1**	33		

: RELAY BLOCKS

CODE	SEE PAGE	RELAY BLOCKS (RELAY BLOCK LOCATION)
1	25	R/B NO. 1 (LEFT KICK PANEL)

: JUNCTION BLOCK AND WIRE HARNESS CONNECTOR

CODE	SEE PAGE	JUNCTION BLOCK AND WIRE HARNESS (CONNECTOR LOCATION)
1A	20	COWL WIRE AND J/B NO. 1 (INSTRUMENT PANEL LEFT)
1C		
1H	20	FLOOR NO. 1 WIRE J/B NO. 1 (INSTRUMENT PANEL LEFT)
1M	20	COWL WIRE AND J/B NO. 1 (INSTRUMENT PANEL LEFT)
2F	22	COWL WIRE AND J/B NO. 2 (ENGINE COMPARTMENT LEFT)
3C	24	COWL WIRE AND J/B NO. 3 (BEHIND COMBINATION METER)
3D		

: CONNECTOR JOINING WIRE HARNESS AND WIRE HARNESS

CODE	SEE PAGE	JOINING WIRE HARNESS AND WIRE HARNESS (CONNECTOR LOCATION)
ED1	38 (1MZ–FE)	COWL WIRE AND ENGINE ROOM MAIN WIRE
	40 (5S–FE)	
IJ1	42	FLOOR NO. 1 WIRE AND COWL WIRE
BZ1	46 (S/D)	LUGGAGE ROOM NO. 1 WIRE AND FLOOR NO. 1 WIRE
	48 (C/P)	

: GROUND POINTS

CODE	SEE PAGE	GROUND POINTS LOCATION
EA	38 (1MZ–FE)	FRONT RIGHT FENDER
	40 (5S–FE)	
EB	38 (1MZ–FE)	FRONT LEFT FENDER
	40 (5S–FE)	
IE	42	LEFT KICK PANEL
IG	42	INSTRUMENT PANEL BRACE LH
BO	46 (S/D)	LEFT QUARTER PILLAR
	48 (C/P)	

: SPLICE POINTS

CODE	SEE PAGE	WIRE HARNESS WITH SPLICE POINTS	CODE	SEE PAGE	WIRE HARNESS WITH SPLICE POINTS
I 7	44	COWL WIRE	**I11**	44	COWL WIRE

TURN SIGNAL AND HAZARD WARNING LIGHT (S/D, C/P)

C 8 BLUE

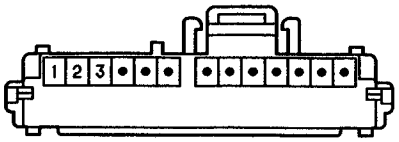

C12 BLACK

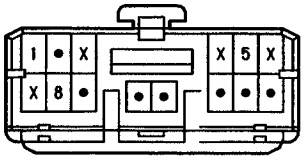

F 7, F 8 BLACK

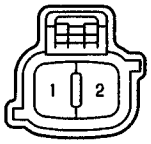

H 7 BLACK

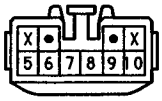

J 1 DARK GRAY

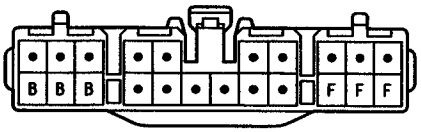

(HINT: SEE PAGE 7)

R 8, R10

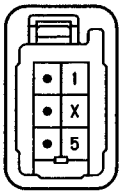

C 8 BLUE

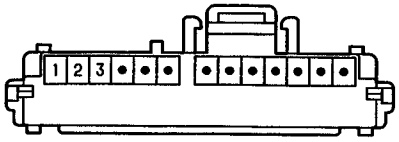

C12 BLACK

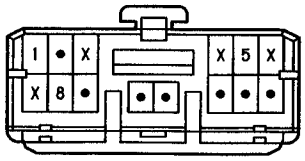

F 7, F 8 BLACK

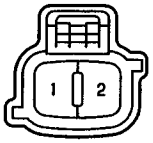

H 7 BLACK

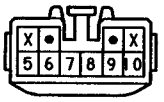

J 1 DARK GRAY

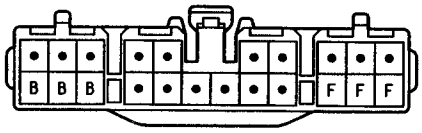

(HINT:SEE PAGE 7)

J 5

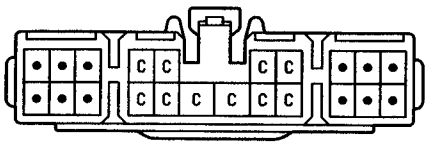

(HINT:SEE PAGE 7)

R 8

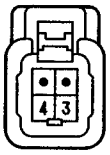

R10

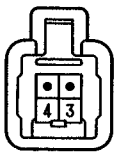

TURN SIGNAL AND HAZARD WARNING LIGHT (W/G)

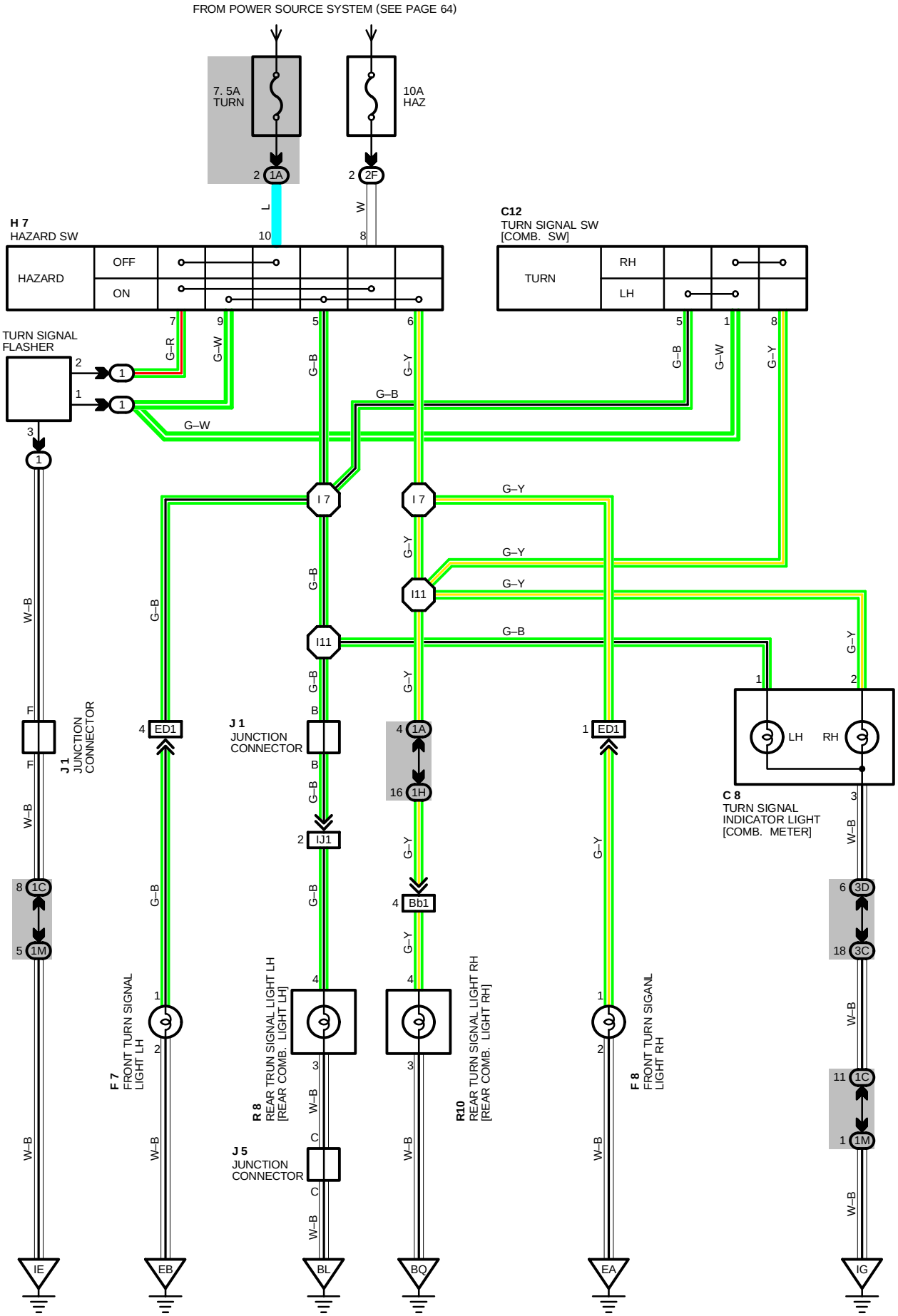

SERVICE HINTS

TURN SIGNAL FLASHER

(1) 2–GROUND : APPROX. **12** VOLTS WITH IGNITION SW ON OR HAZARD SW ON

(1) 1–GROUND : CHANGES FROM APPROX. **12** TO **0** VOLTS WITH IGNITION SW ON AND TURN SIGNAL SW LEFT OR RIGHT, OR HAZARD SW ON

(1) 3–GROUND: ALWAYS CONTINUITY

: PARTS LOCATION

CODE	SEE PAGE	CODE	SEE PAGE	CODE	SEE PAGE
C 8	32	**F 8**	28 (1MZ–FE), 30 (5S–FE)	**J 5**	36
C12	32	**H 7**	33	**R 8**	36 (W/G)
F 7	28 (1MZ–FE), 30 (5S–FE)	**J 1**	33	**R10**	36 (W/G)

: RELAY BLOCKS

CODE	SEE PAGE	RELAY BLOCKS (RELAY BLOCK LOCATION)
1	25	R/B NO. 1 (LEFT KICK PANEL)

: JUNCTION BLOCK AND WIRE HARNESS CONNECTOR

CODE	SEE PAGE	JUNCTION BLOCK AND WIRE HARNESS (CONNECTOR LOCATION)
1A	20	COWL WIRE AND J/B NO. 1 (INSTRUMENT PANEL LEFT)
1C		
1H	20	FLOOR NO. 1 WIRE J/B NO. 1 (INSTRUMENT PANEL LEFT)
1M	20	COWL WIRE AND J/B NO. 1 (INSTRUMENT PANEL LEFT)
2F	22	COWL WIRE AND J/B NO. 2 (ENGINE COMPARTMENT LEFT)
3C	24	COWL WIRE AND J/B NO. 3 (BEHIND COMBINATION METER)
3D		

: CONNECTOR JOINING WIRE HARNESS AND WIRE HARNESS

CODE	SEE PAGE	JOINING WIRE HARNESS AND WIRE HARNESS (CONNECTOR LOCATION)
ED1	38 (1MZ–FE)	COWL WIRE AND ENGINE ROOM MAIN WIRE
	40 (5S–FE)	
IJ1	42	FLOOR NO. 1 WIRE AND COWL WIRE
Bb1	50 (W/G)	LUGGAGE ROOM NO. 1 WIRE AND FLOOR NO. 1 WIRE

: GROUND POINTS

CODE	SEE PAGE	GROUND POINTS LOCATION
EA	38 (1MZ–FE)	FRONT RIGHT FENDER
	40 (5S–FE)	
EB	38 (1MZ–FE)	FRONT LEFT FENDER
	40 (5S–FE)	
IE	42	LEFT KICK PANEL
IG	42	INSTRUMENT PANEL BRACE LH
BL	46 (S/D)	UNDER THE LEFT QUARTER PILLAR
	48 (C/P)	
	50 (W/G)	
BQ	50 (W/G)	LOWER BACK PANEL CENTER

: SPLICE POINTS

CODE	SEE PAGE	WIRE HARNESS WITH SPLICE POINTS	CODE	SEE PAGE	WIRE HARNESS WITH SPLICE POINTS
I 7	44	COWL WIRE	**I11**	44	COWL WIRE

STOP LIGHT (S/D, C/P)

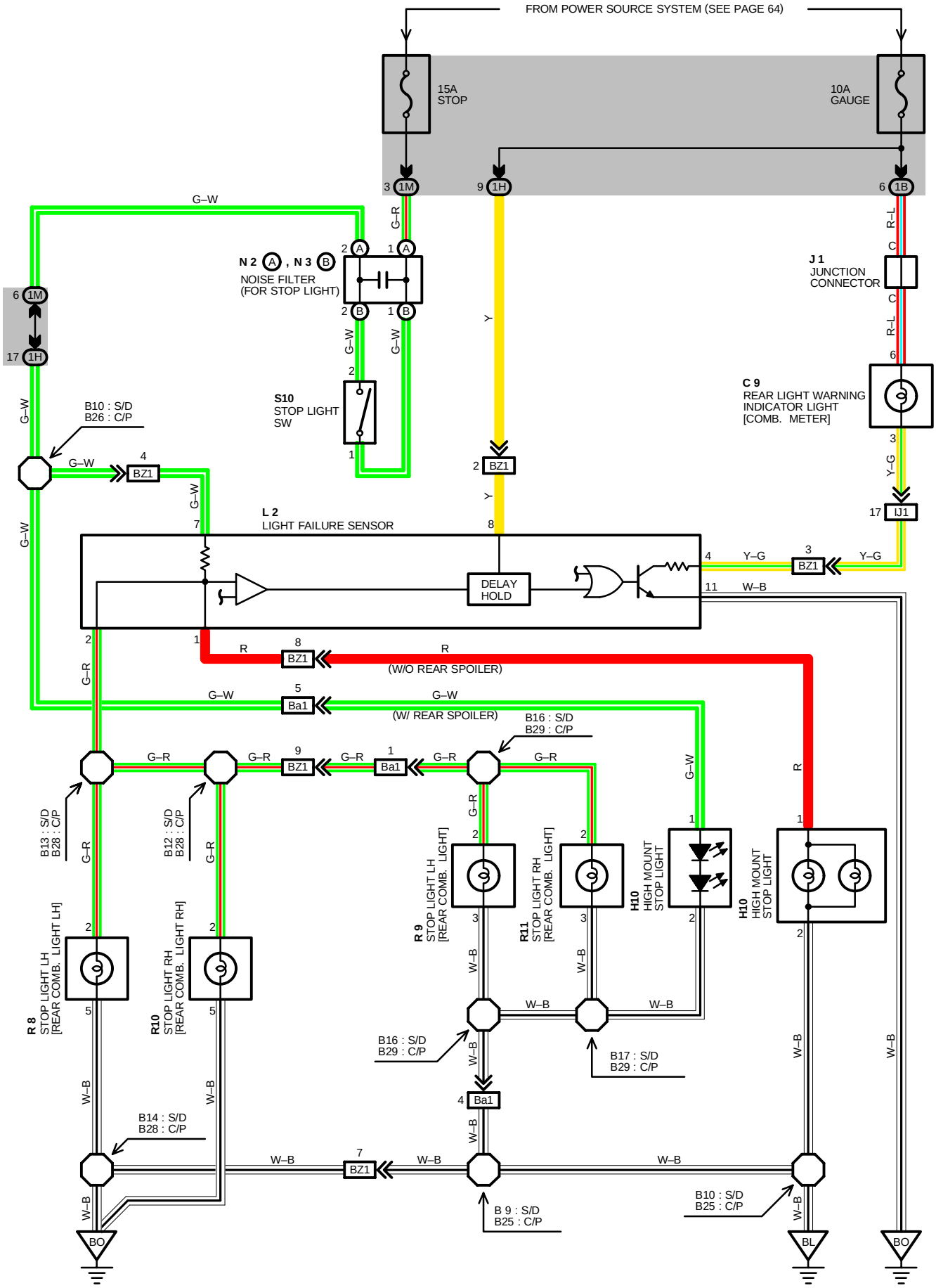

SYSTEM OUTLINE

CURRENT IS APPLIED AT ALL TIMES THROUGH A **STOP** FUSE TO **TERMINAL 2** OF THE STOP LIGHT SW.

WHEN THE IGNITION SW IS TURNED ON, CURRENT FLOWS FROM THE **GAUGE** FUSE TO **TERMINAL 8** OF THE LIGHT FAILURE SENSOR, AND ALSO FLOWS THROUGH THE REAR LIGHT WARNING LIGHT TO **TERMINAL 4** OF THE LIGHT FAILURE SENSOR.

STOP LIGHT DISCONNECTION WARNING

WHEN THE IGNITION SW IS TURNED ON AND THE BRAKE PEDAL IS PRESSED (STOP LIGHT SW ON), IF THE STOP LIGHT CIRCUIT IS OPEN, THE CURRENT FLOWING FROM **TERMINALS 7** OF THE LIGHT FAILURE SENSOR TO **TERMINALS 1, 2** CHANGES, SO THE LIGHT FAILURE SENSOR DETECTS THE DISCONNECTION AND THE WARNING CIRCUIT OF THE LIGHT FAILURE SENSOR IS ACTIVATED.

AS A RESULT, THE CURRENT FLOWS FROM **TERMINAL 4** OF THE LIGHT FAILURE SENSOR → **TERMINAL 11** → **GROUND** AND TURNS THE REAR LIGHT WARNING LIGHT ON. BY PRESSING THE BRAKE PEDAL, THE CURRENT FLOWING TO **TERMINAL 8** OF THE LIGHT FAILURE SENSOR KEEPS THE WARNING CIRCUIT ON HOLD AND THE WARNING LIGHT ON UNTIL THE IGNITION SW IS TURNED OFF.

SERVICE HINTS

S10 STOP LIGHT SW
2–1 : CLOSED WITH BRAKE PEDAL DEPRESSED
L 2 LIGHT FAILURE SENSOR
1, 2, 7–GROUND : APPROX. **12** VOLTS WITH STOP LIGHT SW ON
4, 8–GROUND : APPROX. **12** VOLTS WITH IGNITION SW AT **ON** POSITION
11–GROUND : ALWAYS CONTINUITY

○ : PARTS LOCATION

CODE	SEE PAGE	CODE		SEE PAGE	CODE	SEE PAGE
C 9	32	**N 2**	A	33	**R10**	34 (S/D), 35 (C/P)
H10	34 (S/D), 35 (C/P)	**N 3**	B	33	**R11**	34 (S/D), 35 (C/P)
J 1	33	**R 8**		34 (S/D), 35 (C/P)	**S10**	33
L 2	34 (S/D), 35 (C/P)	**R 9**		34 (S/D), 35 (C/P)		

⬭ : JUNCTION BLOCK AND WIRE HARNESS CONNECTOR

CODE	SEE PAGE	JUNCTION BLOCK AND WIRE HARNESS (CONNECTOR LOCATION)
1B	20	COWL WIRE AND J/B NO. 1 (INSTRUMENT PANEL LEFT)
1H	20	FLOOR NO. 1 WIRE J/B NO. 1 (INSTRUMENT PANEL LEFT)
1M	20	COWL WIRE AND J/B NO. 1 (INSTRUMENT PANEL LEFT)

▭ : CONNECTOR JOINING WIRE HARNESS AND WIRE HARNESS

CODE	SEE PAGE	JOINING WIRE HARNESS AND WIRE HARNESS (CONNECTOR LOCATION)
IJ1	42	FLOOR NO. 1 WIRE AND COWL WIRE
BZ1	46 (S/D)	LUGGAGE ROOM NO. 1 WIRE AND FLOOR NO. 1 WIRE
	48 (C/P)	
Ba1	46 (S/D)	FLOOR NO. 1 WIRE AND LUGGAGE ROOM NO. 2 WIRE
	48 (C/P)	

▽ : GROUND POINTS

CODE	SEE PAGE	GROUND POINTS LOCATION
BL	46 (S/D)	UNDER THE LEFT QUARTER PILLAR
	48 (C/P)	
	50 (W/G)	
BQ	50 (W/G)	LOWER BACK PANEL CENTER

⯃ : SPLICE POINTS

CODE	SEE PAGE	WIRE HARNESS WITH SPLICE POINTS	CODE	SEE PAGE	WIRE HARNESS WITH SPLICE POINTS
B 9	46 (S/D)	FLOOR NO. 1 WIRE	**B17**	46 (S/D)	LUGGAGE ROOM NO. 2 WIRE
B10			**B25**	48 (C/P)	FLOOR NO. 1 WIRE
B12	46 (S/D)	LUGGAGE ROOM NO. 1 WIRE	**B26**		
B13			**B28**	48 (C/P)	LUGGAGE ROOM NO. 1 WIRE
B14			**B29**	48 (C/P)	LUGGAGE ROOM NO. 2 WIRE
B16	46 (S/D)	LUGGAGE ROOM NO. 2 WIRE			

STOP LIGHT (S/D, C/P)

C 9

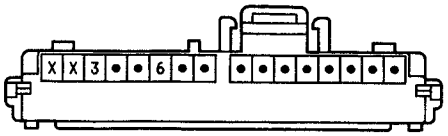

(W/ REAR SPOILER) H10



(W/O REAR SPOILER) H10

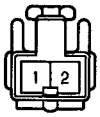

J 1 DARK GRAY

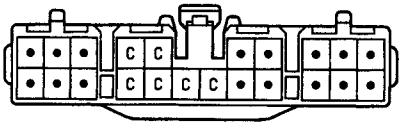

(HINT: SEE PAGE 7)

L 2

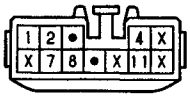

N 2 (A)

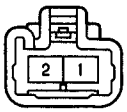

N 3 (B)

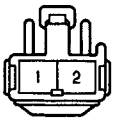

R 8, R10

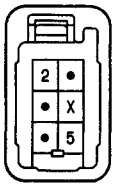

R 9, R11

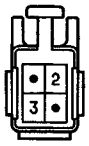

S10 BLUE

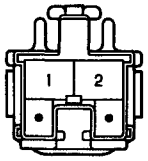

C 9

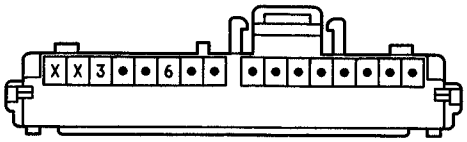

H10

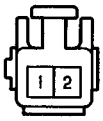

J 1 DARK GRAY

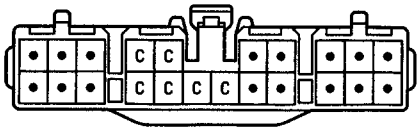

(HINT: SEE PAGE 7)

J 5

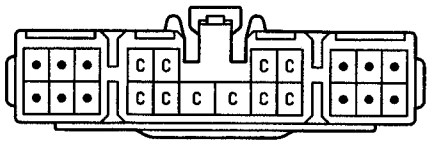

(HINT: SEE PAGE 7)

L 2

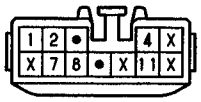

N 2 (A)

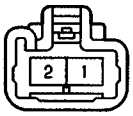

N 3 (B)

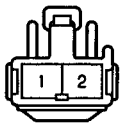

R 8

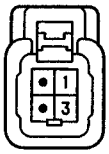

R10

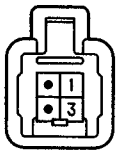

R 9, R11

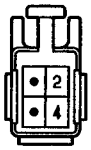

S10 BLUE

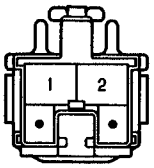

STOP LIGHT (W/G)

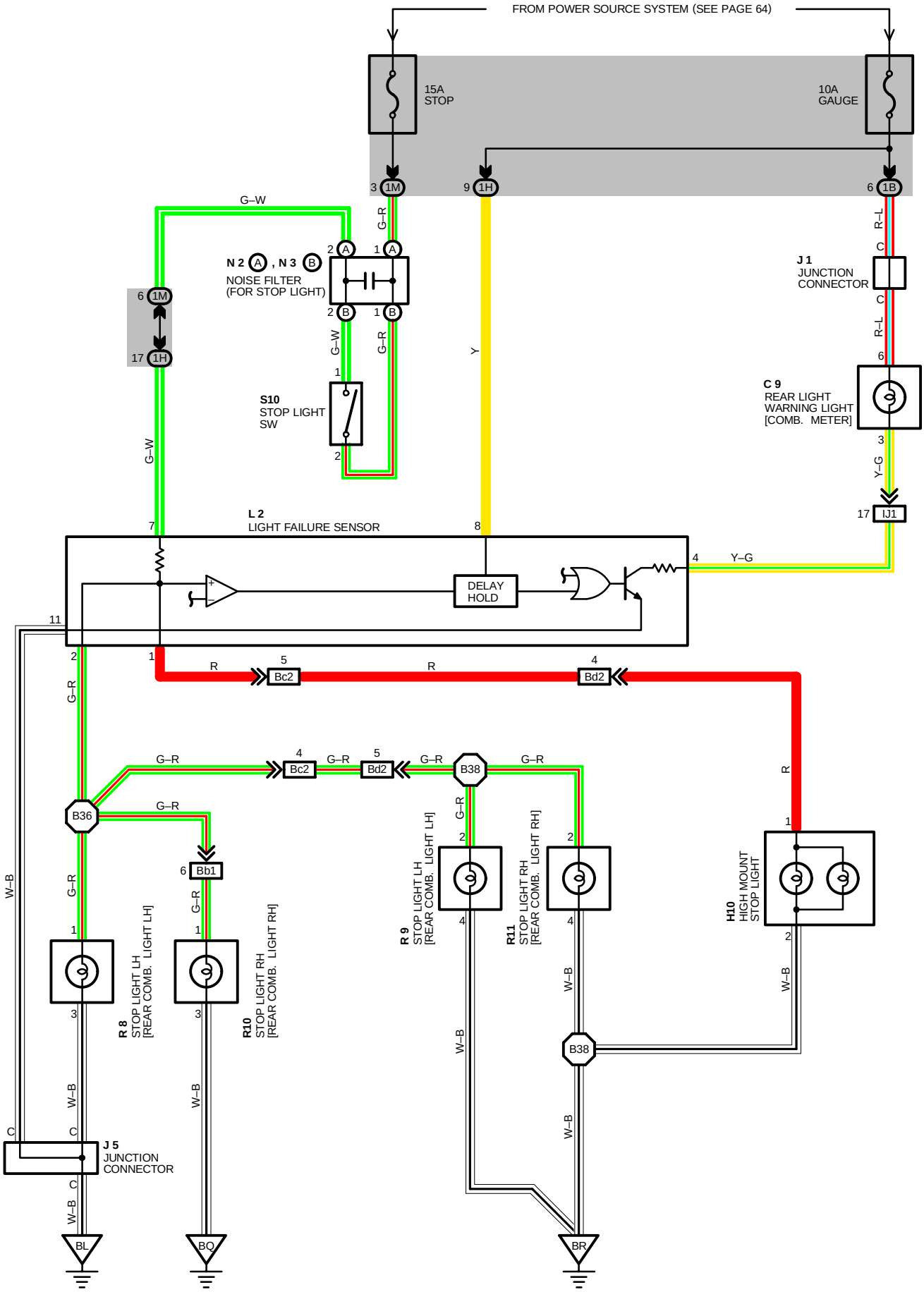

SYSTEM OUTLINE

CURRENT IS APPLIED AT ALL TIMES THROUGH A **STOP** FUSE TO **TERMINAL 2** OF THE STOP LIGHT SW.

WHEN THE IGNITION SW IS TURNED ON, CURRENT FLOWS FROM THE **GAUGE** FUSE TO **TERMINAL 8** OF THE LIGHT FAILURE SENSOR, AND ALSO FLOWS THROUGH THE REAR LIGHT WARNING LIGHT TO **TERMINAL 4** OF THE LIGHT FAILURE SENSOR.

STOP LIGHT DISCONNECTION WARNING

WHEN THE IGNITION SW IS TURNED ON AND THE BRAKE PEDAL IS PRESSED (STOP LIGHT SW ON), IF THE STOP LIGHT CIRCUIT IS OPEN, THE CURRENT FLOWING FROM **TERMINALS 7** OF THE LIGHT FAILURE SENSOR TO **TERMINALS 1, 2** CHANGES, SO THE LIGHT FAILURE SENSOR DETECTS THE DISCONNECTION AND THE WARNING CIRCUIT OF THE LIGHT FAILURE SENSOR IS ACTIVATED.

AS A RESULT, THE CURRENT FLOWS FROM **TERMINAL 4** OF THE LIGHT FAILURE SENSOR → **TERMINAL 11** → **GROUND** AND TURNS THE REAR LIGHT WARNING LIGHT ON. BY PRESSING THE BRAKE PEDAL, THE CURRENT FLOWING TO **TERMINAL 8** OF THE LIGHT FAILURE SENSOR KEEPS THE WARNING CIRCUIT ON HOLD AND THE WARNING LIGHT ON UNTIL THE IGNITION SW IS TURNED OFF.

SERVICE HINTS

S10 STOP LIGHT SW
2–1 : CLOSED WITH BRAKE PEDAL DEPRESSED
L 2 LIGHT FAILURE SENSOR
1, 2, 7–GROUND : APPROX. **12** VOLTS WITH STOP LIGHT SW ON
4, 8–GROUND : APPROX. **12** VOLTS WITH IGNITION SW AT **ON** POSITION
11–GROUND : ALWAYS CONTINUITY

: PARTS LOCATION

CODE	SEE PAGE	CODE		SEE PAGE	CODE	SEE PAGE
C 9	32	**L 2**		36 (W/G)	**R 9**	36 (W/G)
H10	36 (W/G)	**N 2**	A	33	**R10**	36 (W/G)
J 1	33	**N 3**	B	33	**R11**	36 (W/G)
J 5	36 (W/G)	**R 8**		36 (W/G)	**S10**	33

: JUNCTION BLOCK AND WIRE HARNESS CONNECTOR

CODE	SEE PAGE	JUNCTION BLOCK AND WIRE HARNESS (CONNECTOR LOCATION)
1B	20	COWL WIRE AND J/B NO. 1 (INSTRUMENT PANEL LEFT)
1H	20	FLOOR NO. 1 WIRE J/B NO. 1 (INSTRUMENT PANEL LEFT)
1M	20	COWL WIRE AND J/B NO. 1 (INSTRUMENT PANEL LEFT)

: CONNECTOR JOINING WIRE HARNESS AND WIRE HARNESS

CODE	SEE PAGE	JOINING WIRE HARNESS AND WIRE HARNESS (CONNECTOR LOCATION)
IJ1	42	FLOOR NO. 1 WIRE AND COWL WIRE
Bb1	50 (W/G)	LUGGAGE ROOM NO. 1 WIRE AND FLOOR NO. 1 WIRE
Bc2	50 (W/G)	BACK DOOR NO. 1 WIRE AND FLOOR NO. 1 WIRE
Bd2	50 (W/G)	BACK DOOR NO. 1 WIRE AND BACK DOOR NO. 2 WIRE

: GROUND POINTS

CODE	SEE PAGE	GROUND POINTS LOCATION
BL	46 (S/D)	UNDER THE LEFT QUARTER PILLAR
	48 (C/P)	
	50 (W/G)	
BQ	50 (W/G)	LOWER BACK PANEL CENTER
BR	50 (W/G)	BACK DOOR CENTER

: SPLICE POINTS

CODE	SEE PAGE	WIRE HARNESS WITH SPLICE POINTS	CODE	SEE PAGE	WIRE HARNESS WITH SPLICE POINTS
B36	50 (W/G)	FLOOR NO. 1 WIRE	**B38**	50 (W/G)	BACK DOOR NO. 2 WIRE

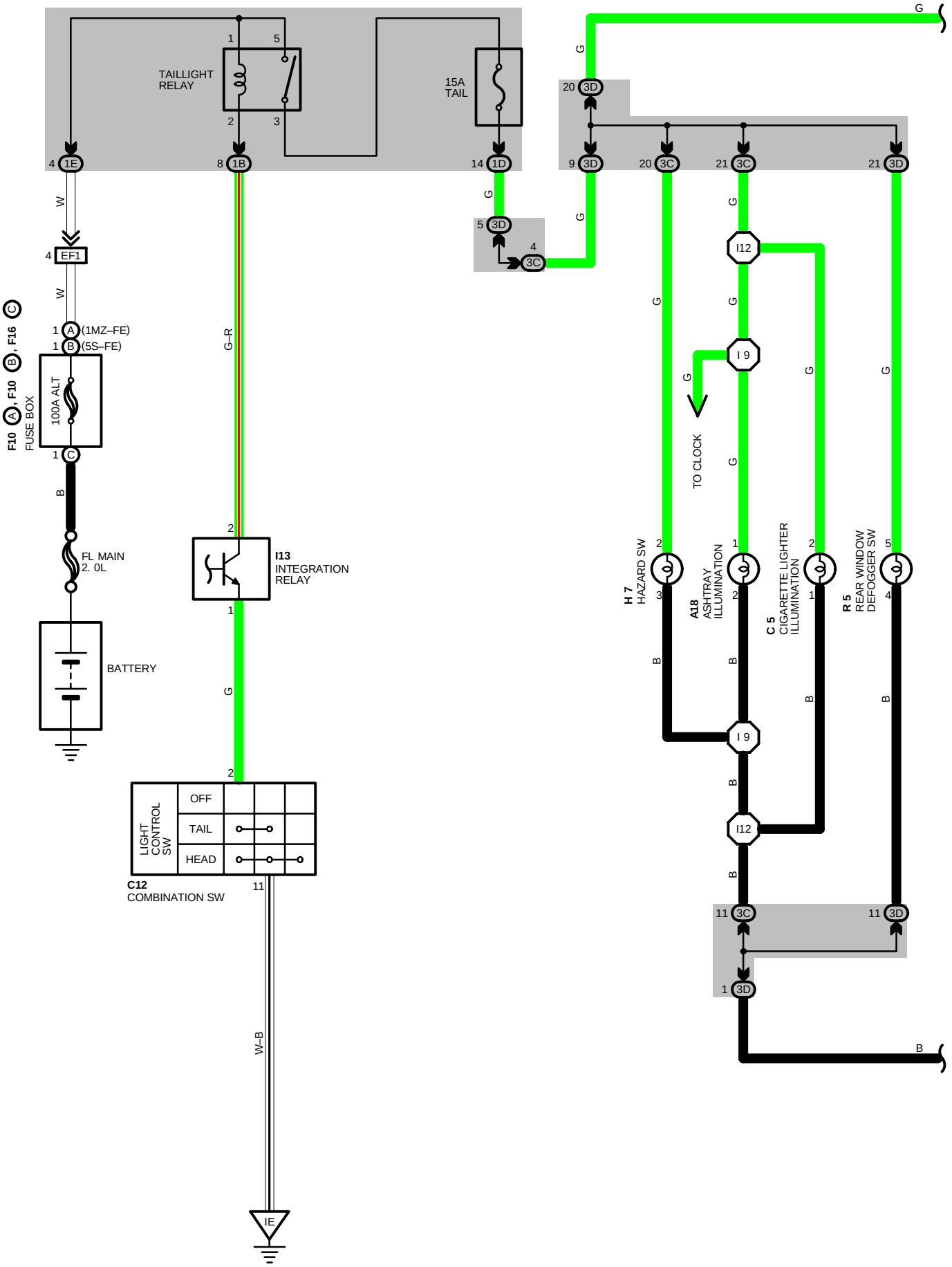
TAILLIGHT RELAY
15A TAIL
4 1E
8 1B
14 1D
20 3D
9 3D
20 3C
21 3C
21 3D
5 3D
4 3C
4 EF1
W
G
G–R
B
1 A (1MZ–FE)
1 B (5S–FE)
1 C
F10 A, F10 B, F16 C
FUSE BOX
100A ALT
FL MAIN 2. 0L
BATTERY
I13 INTEGRATION RELAY
I12
I 9
TO CLOCK
H 7 HAZARD SW
A18 ASHTRAY ILLUMINATION
C 5 CIGARETTE LIGHTER ILLUMINATION
R 5 REAR WINDOW DEFOGGER SW
LIGHT CONTROL SW
OFF
TAIL
HEAD
C12 COMBINATION SW
11 3C
11 3D
1 3D
W–B
IE

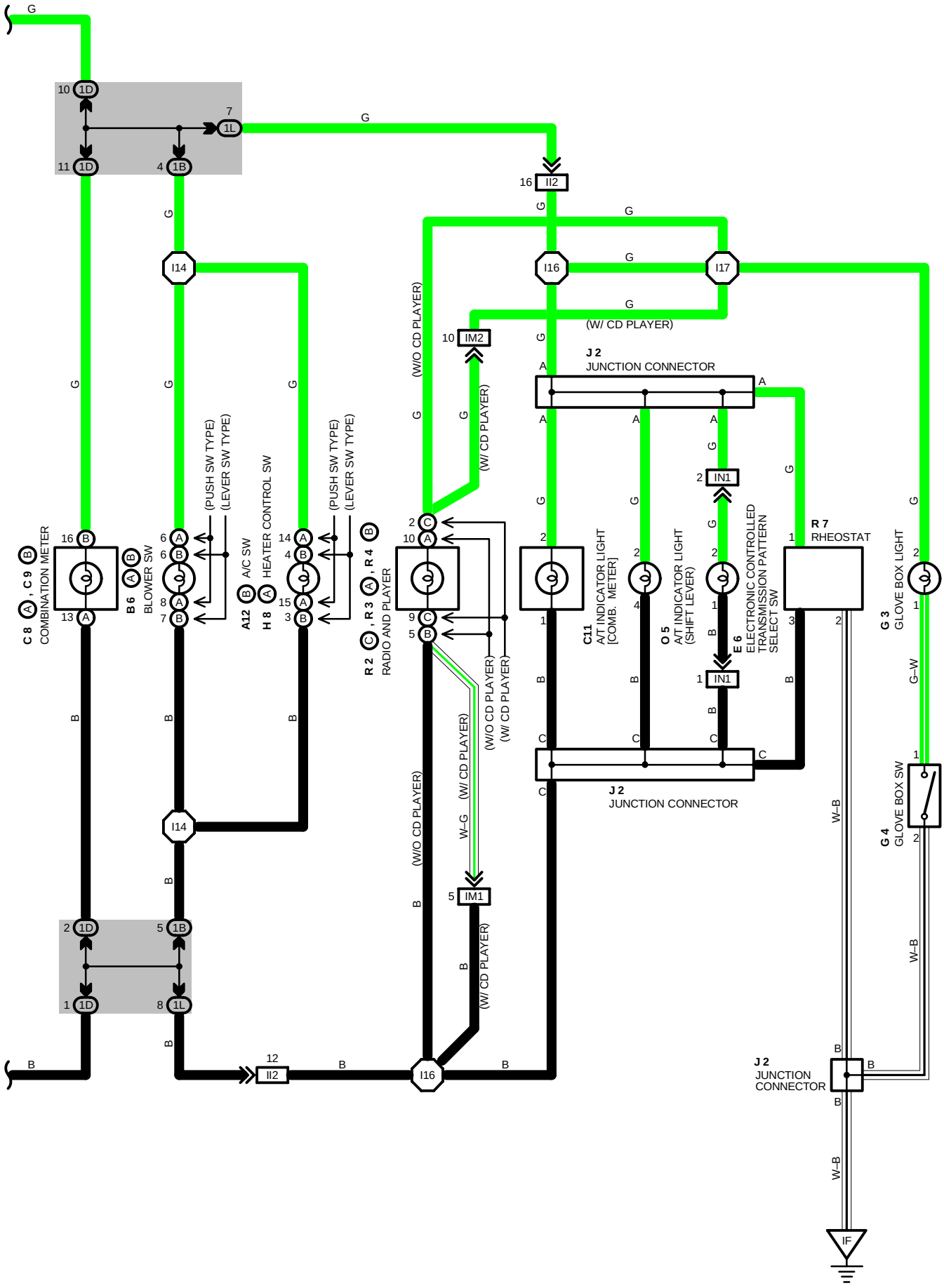
C 8 , C 9
COMBINATION METER
B 6
BLOWER SW
(PUSH SW TYPE)
(LEVER SW TYPE)
A12
A/C SW
H 8
HEATER CONTROL SW
R 2 , R 3 , R 4
RADIO AND PLAYER
(W/O CD PLAYER)
(W/ CD PLAYER)
W–G
C11
A/T INDICATOR LIGHT [COMB. METER]
O 5
A/T INDICATOR LIGHT (SHIFT LEVER)
E 6
ELECTRONIC CONTROLLED TRANSMISSION PATTERN SELECT SW
R 7
RHEOSTAT
G 3
GLOVE BOX LIGHT
G 4
GLOVE BOX SW
G–W
W–B
J 2
JUNCTION CONNECTOR
IF

ILLUMINATION

SERVICE HINTS

TAILLIGHT RELAY

5–3 : CLOSED WITH LIGHT CONTROL SW AT **TAIL** OR **HEAD** POSITION (WHEN LIGHT AUTO TURN OFF SYSTEM IS OFF)
CLOSED WITH ENGINE RUNNING AND PARKING BRAKE LEVER RELEASED (CANADA)

R 7 RHEOSTAT

3–2 : APPROX. **12** VOLTS WITH RHEOSTAT FULLY TURNED COUNTERCLOCKWISE AND **0** VOLTS WITH FULLY TURNED CLOCKWISE

: PARTS LOCATION

CODE		SEE PAGE	CODE		SEE PAGE	CODE		SEE PAGE
A12	B	32	**E 6**		32	**J 2**		33
A18		32	**F10**	A	28 (1MZ–FE), 30 (5S–FE)	**O 5**		33
B 6	A	32		B	28 (1MZ–FE), 30 (5S–FE)	**R 2**	C	33
	B	32	**F16**	C	28 (1MZ–FE), 30 (5S–FE)	**R 3**	A	33
C 5		32	**G 3**		33	**R 4**	B	33
C 8	A	32	**G 4**		33	**R 5**		33
C 9	B	32	**H 7**		33	**R 7**		33
C11		32	**H 8**	A	33			
C12		32	**I13**		33			

: JUNCTION BLOCK AND WIRE HARNESS CONNECTOR

CODE	SEE PAGE	JUNCTION BLOCK AND WIRE HARNESS (CONNECTOR LOCATION)
1B	20	COWL WIRE AND J/B NO. 1 (INSTRUMENT PANEL LEFT)
1D		
1E		
1L		
3C	24	COWL WIRE AND J/B NO. 3 (BEHIND COMBINATION METER)
3D		

: CONNECTOR JOINING WIRE HARNESS AND WIRE HARNESS

CODE	SEE PAGE	JOINING WIRE HARNESS AND WIRE HARNESS (CONNECTOR LOCATION)
EF1	38 (1MZ–FE)	ENGINE WIRE AND COWL WIRE
	40 (5S–FE)	
II2	42	INSTRUMENT PANEL WIRE AND COWL WIRE
IM1	42	INSTRUMENT PANEL WIRE AND CONSOLE BOX WIRE
IM2		
IN1	42	INSTRUMENT PANEL WIRE AND SWITCH WIRE

: GROUND POINTS

CODE	SEE PAGE	GROUND POINTS LOCATION
IE	42	LEFT KICK PANEL
IF		

: SPLICE POINTS

CODE	SEE PAGE	WIRE HARNESS WITH SPLICE POINTS	CODE	SEE PAGE	WIRE HARNESS WITH SPLICE POINTS
I 9	44	COWL WIRE	**I16**	44	INSTRUMENT PANEL WIRE
I12			**I17**		
I14					

A12 (B) BLACK

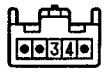

A18



(PUSH SW TYPE) B 6 (A) BLACK

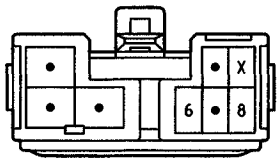

(LEVER SW TYPE) B 6 (B) BLACK

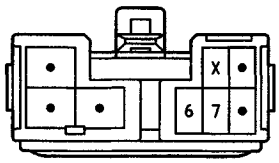

C 5 GRAY



C 8 (A) BLUE

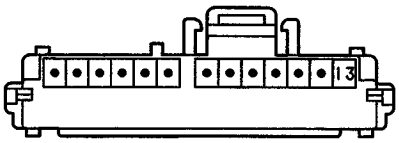

C 9 (B)

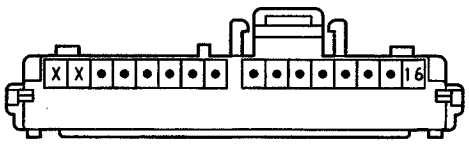

C11 BROWN

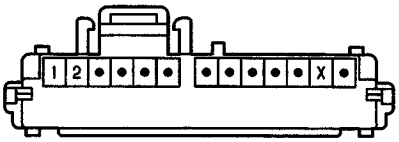

C12 BLACK

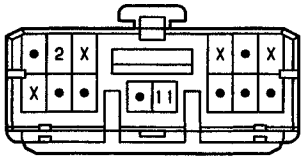

E 6 BLACK



(1MZ-FE) F10 (A)

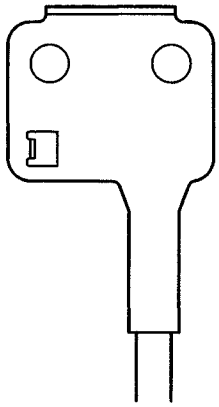

(5S-FE) F10 (B)

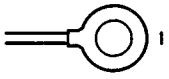

F16 (C)

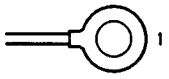

G 3 GRAY



G 4 BLACK



H 7 BLACK

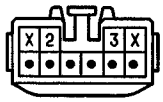

H 8 (A) BLACK

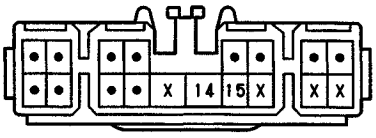

I13

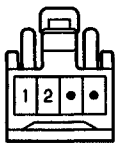

J 2

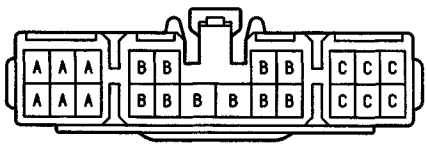

(HINT:SEE PAGE 7)

O 5 BLUE



R 2 (C) BLUE

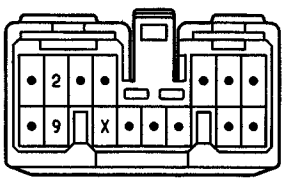

R 3 (A) BLUE

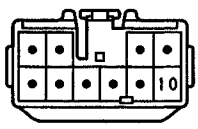

R 4 (B) BLUE

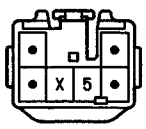

R 5 BLUE



R 7

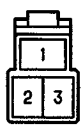

INTERIOR LIGHT (S/D, C/P w/ KEY ILLUMINATED ENTRY)

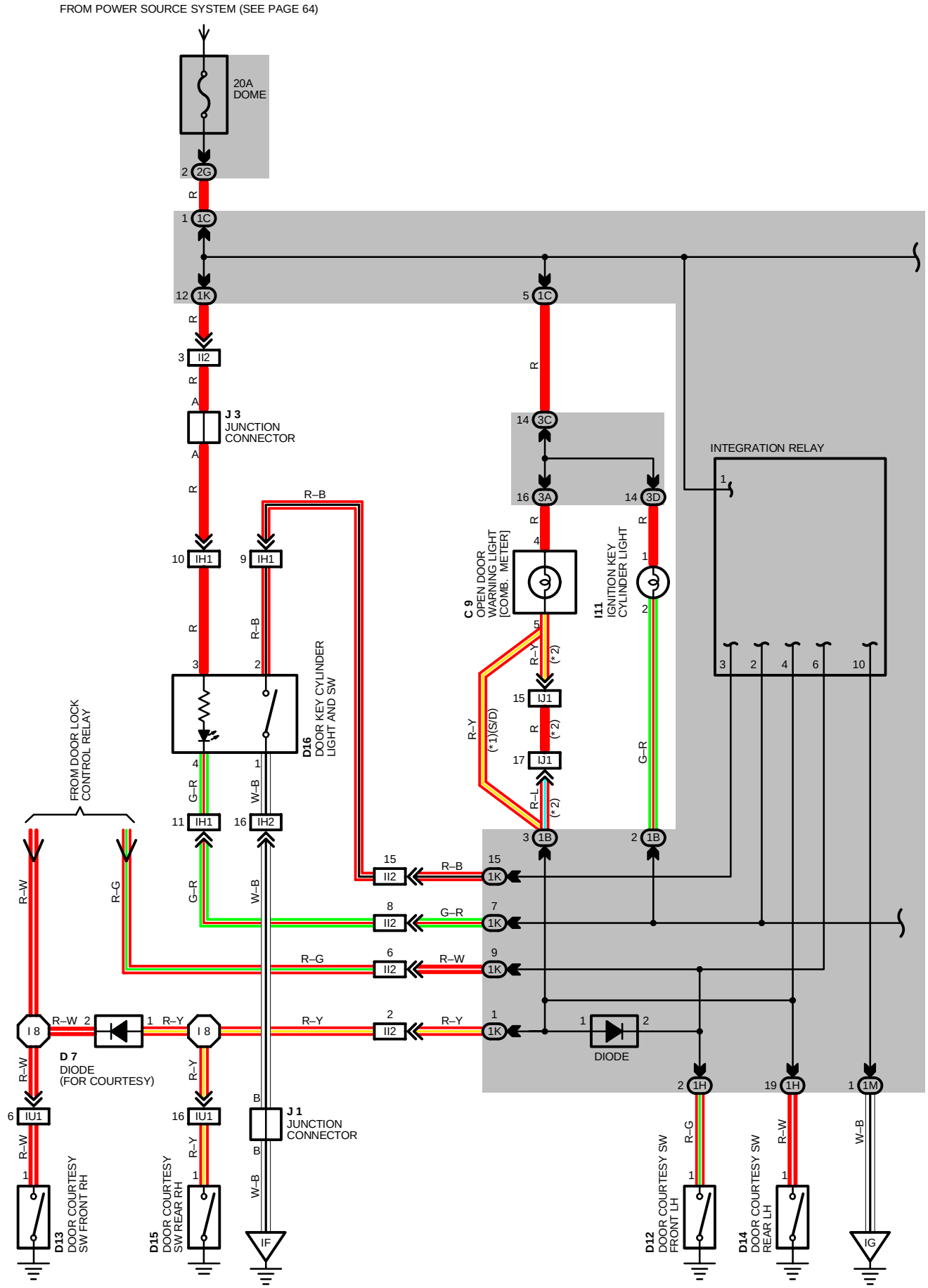

*1 : TMC MADE
*2 : TMM MADE

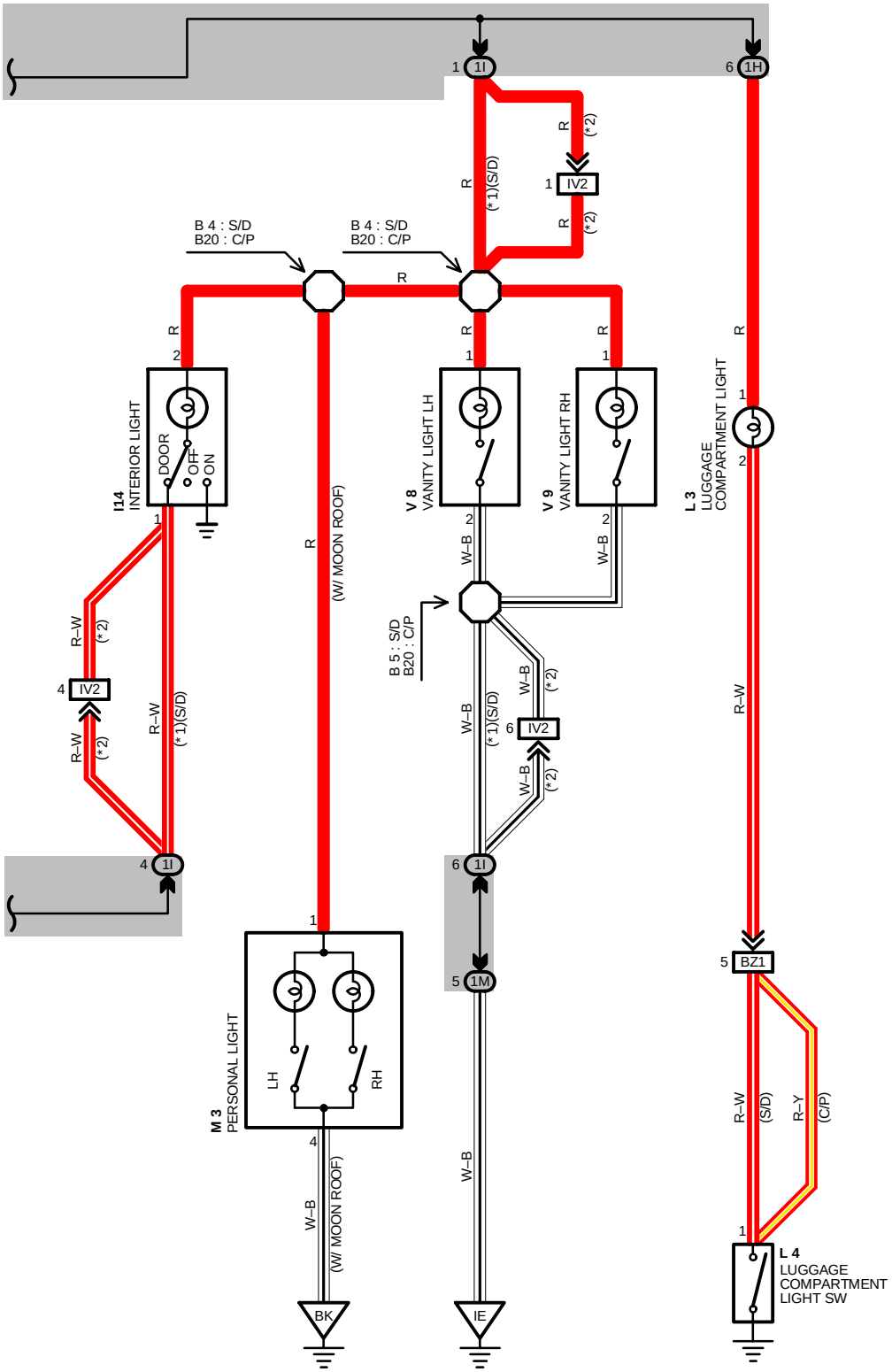

INTERIOR LIGHT (S/D, C/P w/ KEY ILLUMINATED ENTRY)

*1 : TMC MADE
*2 : TMM MADE

SERVICE HINTS

INTEGRATION RELAY
4–GROUND : APPROX. **12** VOLTS WITH DOOR CLOSED
0 VOLTS WITH EACH DOOR OPEN
D12, D13, D14, D15 DOOR COURTESY SW
1–GROUND : CLOSED WITH DOOR OPEN
L 4 LUGGAGE COMPARTMENT LIGHT SW
1–GROUND : CLOSED WITH LUGGAGE COMPARTMENT DOOR OPEN

○ : PARTS LOCATION

CODE	SEE PAGE	CODE	SEE PAGE	CODE	SEE PAGE
C 9	32	**D16**	34 (S/D), 35 (C/P)	**L 4**	34 (S/D), 35 (C/P)
D 7	32	**I11**	33	**M 3**	34 (S/D), 35 (C/P)
D12	34 (S/D), 35 (C/P)	**I14**	34 (S/D), 35 (C/P)	**V 8**	34 (S/D), 35 (C/P)
D13	34 (S/D), 35 (C/P)	**J 1**	33	**V 9**	34 (S/D), 35 (C/P)
D14	34 (S/D), 35 (C/P)	**J 3**	33		
D15	34 (S/D), 35 (C/P)	**L 3**	34 (S/D), 35 (C/P)		

⬭ : JUNCTION BLOCK AND WIRE HARNESS CONNECTOR

CODE	SEE PAGE	JUNCTION BLOCK AND WIRE HARNESS (CONNECTOR LOCATION)
1B	20	COWL WIRE AND J/B NO. 1 (INSTRUMENT PANEL LEFT)
1C		
1H	20	FLOOR NO. 1 WIRE J/B NO. 1 (INSTRUMENT PANEL LEFT)
1I	20 (*1)	ROOF WIRE AND J/B NO. 1 (INSTRUMENT PANEL) TMC MADE
	20 (*2)	COWL WIRE AND J/B NO. 1 (INSTRUMENT PANEL) TMM MADE
1K	20	COWL WIRE AND J/B NO. 1 (INSTRUMENT PANEL LEFT)
1M		
2G	22	COWL WIRE AND J/B NO. 2 (ENGINE COMPARTMENT LEFT)
3A	24	COWL WIRE AND J/B NO. 3 (BEHIND COMBINATION METER)
3C		
3D		

▭ : CONNECTOR JOINING WIRE HARNESS AND WIRE HARNESS

CODE	SEE PAGE	JOINING WIRE HARNESS AND WIRE HARNESS (CONNECTOR LOCATION)
IH1	42	FRONT DOOR LH WIRE AND INSTRUMENT PANEL WIRE
IH2		
II2	42	INSTRUMENT PANEL WIRE AND COWL WIRE
IJ1	42	FLOOR NO. 1 WIRE AND COWL WIRE
IU1	44	FLOOR NO. 2 WIRE AND INSTRUMENT PANEL WIRE
IV2	44	ROOF WIRE AND COWL WIRE MADE IN USA
BZ1	46 (S/D)	LUGGAGE ROOM NO. 1 WIRE AND FLOOR NO. 1 WIRE
	48 (C/P)	

▽ : GROUND POINTS

CODE	SEE PAGE	GROUND POINTS LOCATION
IF	42	LEFT KICK PANEL
IG	42	INSTRUMENT PANEL BRACE LH
BK	46 (S/D)	ROOF LEFT
	48 (C/P)	

⯃ : SPLICE POINTS

CODE	SEE PAGE	WIRE HARNESS WITH SPLICE POINTS	CODE	SEE PAGE	WIRE HARNESS WITH SPLICE POINTS
I 8	44	INSTRUMENT PANEL WIRE	**B 5**	46 (S/D)	ROOF WIRE
B 4	46 (S/D)	ROOF WIRE	**B20**	48 (C/P)	

C 9

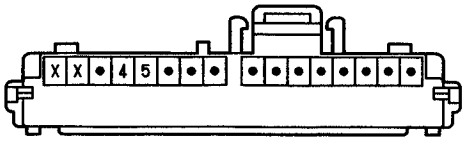

D 7 BLACK



D12, D13, D14, D15



D16 BLACK



I11 BLUE



I14



J 1

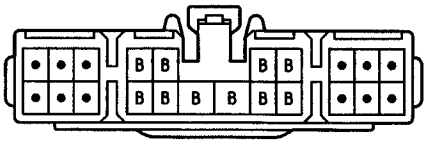

(HINT:SEE PAGE 7)

J 3

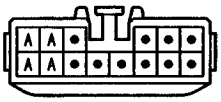

(HINT:SEE PAGE 7)

L 3



L 4 GRAY



M 3



V 8, V 9



INTERIOR LIGHT (W/G w/ KEY ILLUMINATED ENTRY)

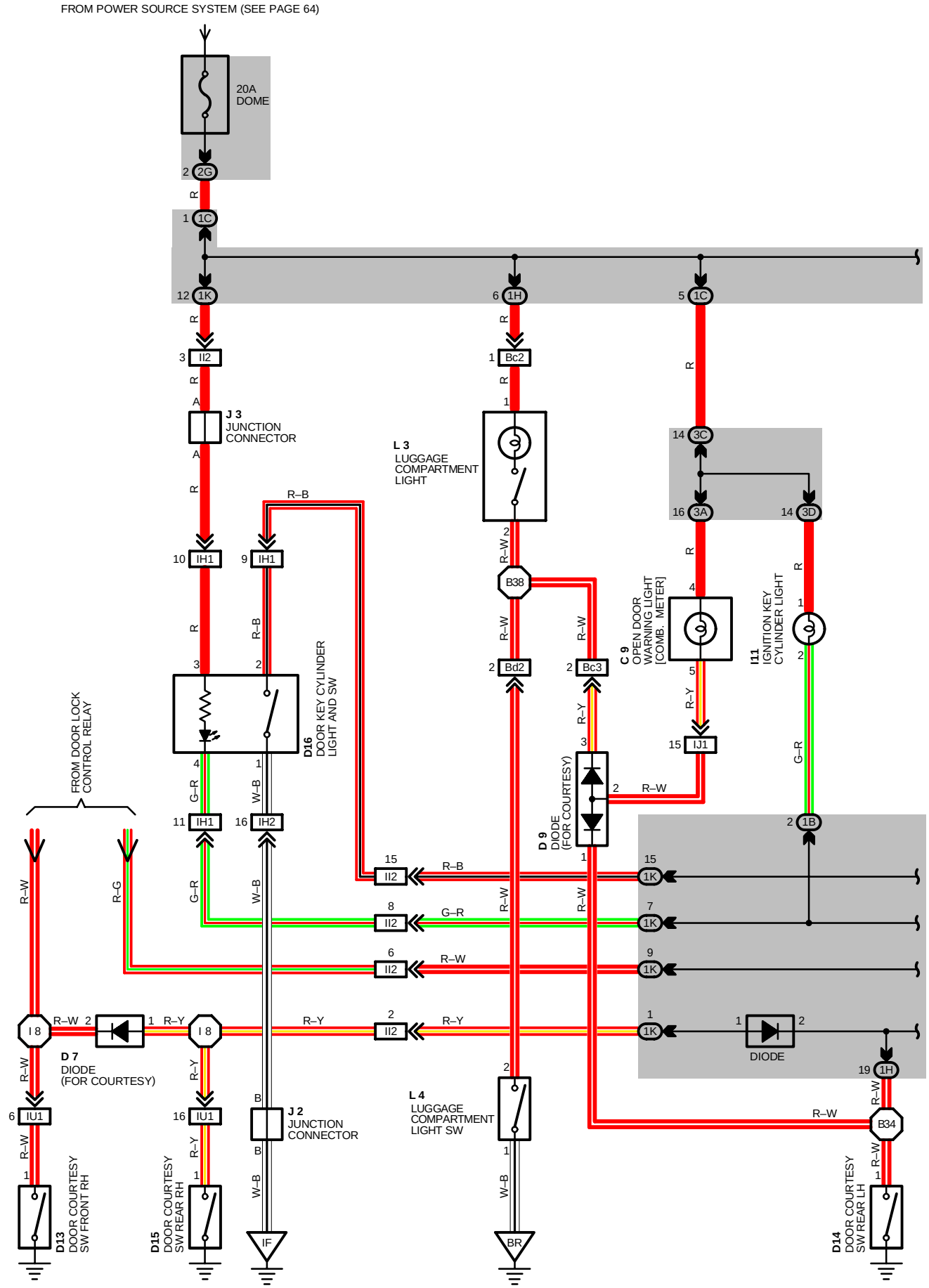

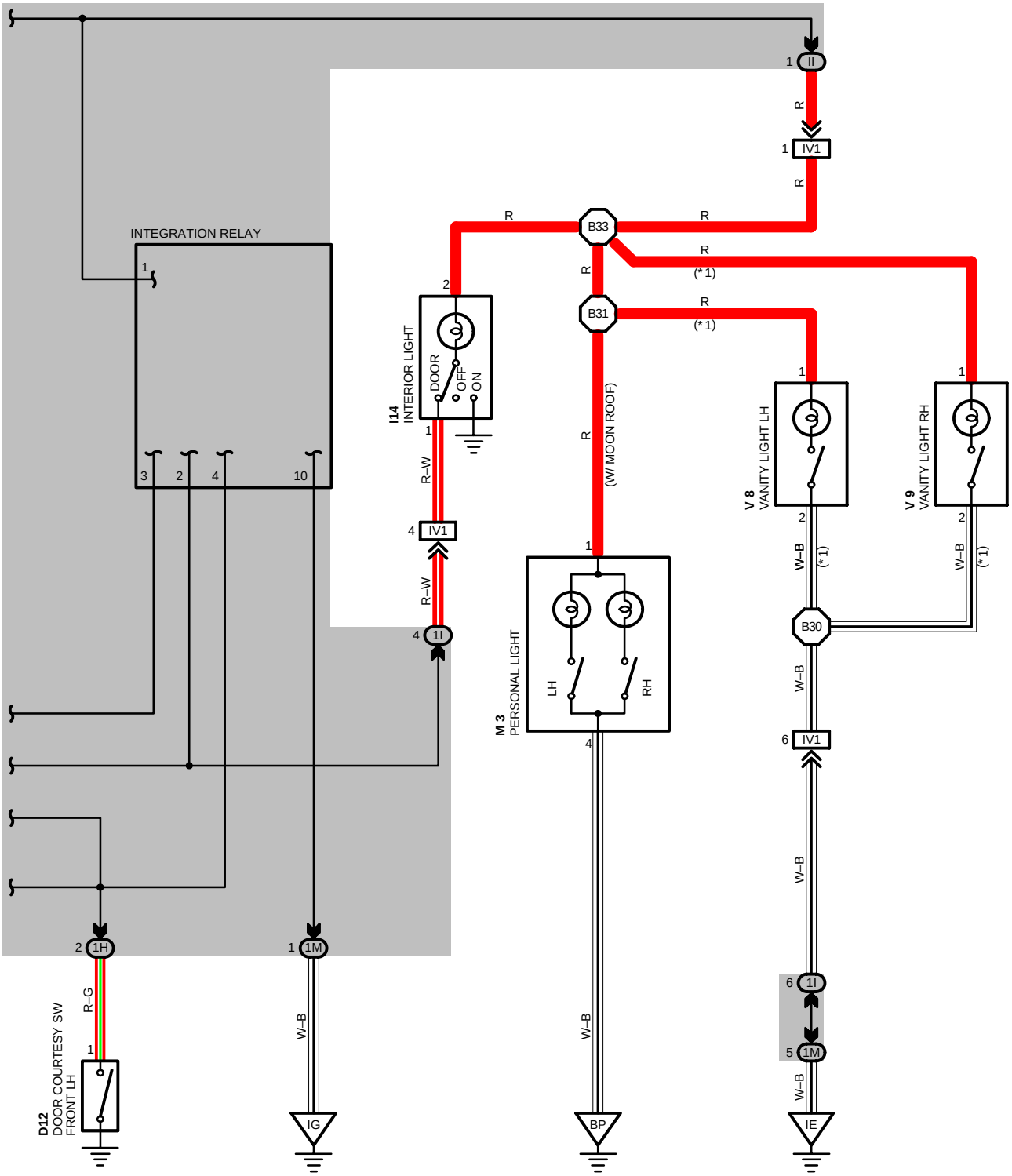
INTEGRATION RELAY
1
3
2
4
10
1I
IV1
R
B33
B31
(*1)
I14
INTERIOR LIGHT
DOOR
OFF
ON
R–W
(W/ MOON ROOF)
M 3
PERSONAL LIGHT
LH
RH
V 8
VANITY LIGHT LH
V 9
VANITY LIGHT RH
W–B
B30
6
5
1M
2
1H
D12
DOOR COURTESY SW
FRONT LH
R–G
IG
BP
IE

INTERIOR LIGHT (W/G w/ KEY ILLUMINATED ENTRY)

SERVICE HINTS

INTEGRATION RELAY

4–GROUND : APPROX. **12** VOLTS WITH DOOR CLOSED
0 VOLTS WITH EACH DOOR OPEN

D12, D13, D14, D15 DOOR COURTESY SW

1–GROUND : CLOSED WITH DOOR OPEN

L 4 LUGGAGE COMPARTMENT LIGHT SW

2–1 : CLOSED WITH LUGGAGE COMPARTMENT DOOR OPEN

: PARTS LOCATION

CODE	SEE PAGE	CODE	SEE PAGE	CODE	SEE PAGE
C 9	32	**D15**	36 (W/G)	**L 3**	36 (W/G)
D 7	32	**D16**	36 (W/G)	**L 4**	36 (W/G)
D 9	36	**I11**	33	**M 3**	36 (W/G)
D12	36 (W/G)	**I14**	36 (W/G)	**V 8**	36 (W/G)
D13	36 (W/G)	**J 2**	33	**V 9**	36 (W/G)
D14	36 (W/G)	**J 3**	33		

: JUNCTION BLOCK AND WIRE HARNESS CONNECTOR

CODE	SEE PAGE	JUNCTION BLOCK AND WIRE HARNESS (CONNECTOR LOCATION)
1B	20	COWL WIRE AND J/B NO. 1 (INSTRUMENT PANEL LEFT)
1C		
1H	20	FLOOR NO. 1 WIRE J/B NO. 1 (INSTRUMENT PANEL LEFT)
1I	20	ROOF WIRE AND J/B NO. 1 (INSTRUMENT PANEL) TMC MADE
	20	COWL WIRE AND J/B NO. 1 (INSTRUMENT PANEL) TMM MADE
1K	20	COWL WIRE AND J/B NO. 1 (INSTRUMENT PANEL LEFT)
1M		
2G	22	COWL WIRE AND J/B NO. 2 (ENGINE COMPARTMENT LEFT)
3A	24	COWL WIRE AND J/B NO. 3 (BEHIND COMBINATION METER)
3C		
3D		

: CONNECTOR JOINING WIRE HARNESS AND WIRE HARNESS

CODE	SEE PAGE	JOINING WIRE HARNESS AND WIRE HARNESS (CONNECTOR LOCATION)
IH1	42	FRONT DOOR LH WIRE AND INSTRUMENT PANEL WIRE
IH2		
II2	42	INSTRUMENT PANEL WIRE AND COWL WIRE
IJ1	42	FLOOR NO. 1 WIRE AND COWL WIRE
IT1	44	FRONT DOOR RH WIRE AND INSTRUMENT PANEL WIRE
IT2		
IU1	44	FLOOR NO. 2 WIRE AND INSTRUMENT PANEL WIRE
IV1	44	ROOF WIRE AND COWL WIRE
Bc2	50 (W/G)	BACK DOOR NO. 1 WIRE AND FLOOR NO. 1 WIRE
Bc3		
Bd2	50 (W/G)	BACK DOOR NO. 1 WIRE AND BACK DOOR NO. 2 WIRE

: GROUND POINTS

CODE	SEE PAGE	GROUND POINTS LOCATION
IE	42	LEFT KICK PANEL
IF		
IG	42	INSTRUMENT PANEL BRACE LH
BP	50 (W/G)	BACK PANEL CENTER
BR	50 (W/G)	BACK DOOR CENTER

: SPLICE POINTS

CODE	SEE PAGE	WIRE HARNESS WITH SPLICE POINTS	CODE	SEE PAGE	WIRE HARNESS WITH SPLICE POINTS
I 8	44	INSTRUMENT PANEL WIRE	**B33**	50 (W/G)	ROOF WIRE
B30	50 (W/G)	ROOF WIRE	**B39**	50 (W/G)	ROOF WIRE NO. 1 WIRE
B31					

C 9

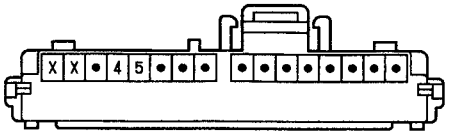

D 7 BLACK



D 9 BLACK

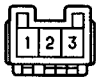

D12, D13, D14, D15



D16 BLACK



I11 BLUE

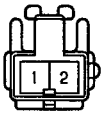

I14

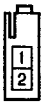

J 2

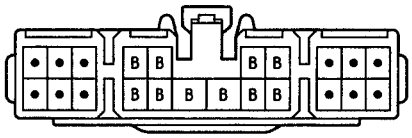

(HINT:SEE PAGE 7)

J 3

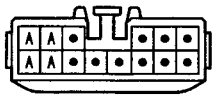

(HINT:SEE PAGE 7)

L 3



L 4 GRAY

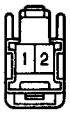

M 3



V 8, V 9



INTERIOR LIGHT (S/D, C/P w/o KEY ILLUMINATED ENTRY)

*1 : TMC MADE
*2 : TMM MADE

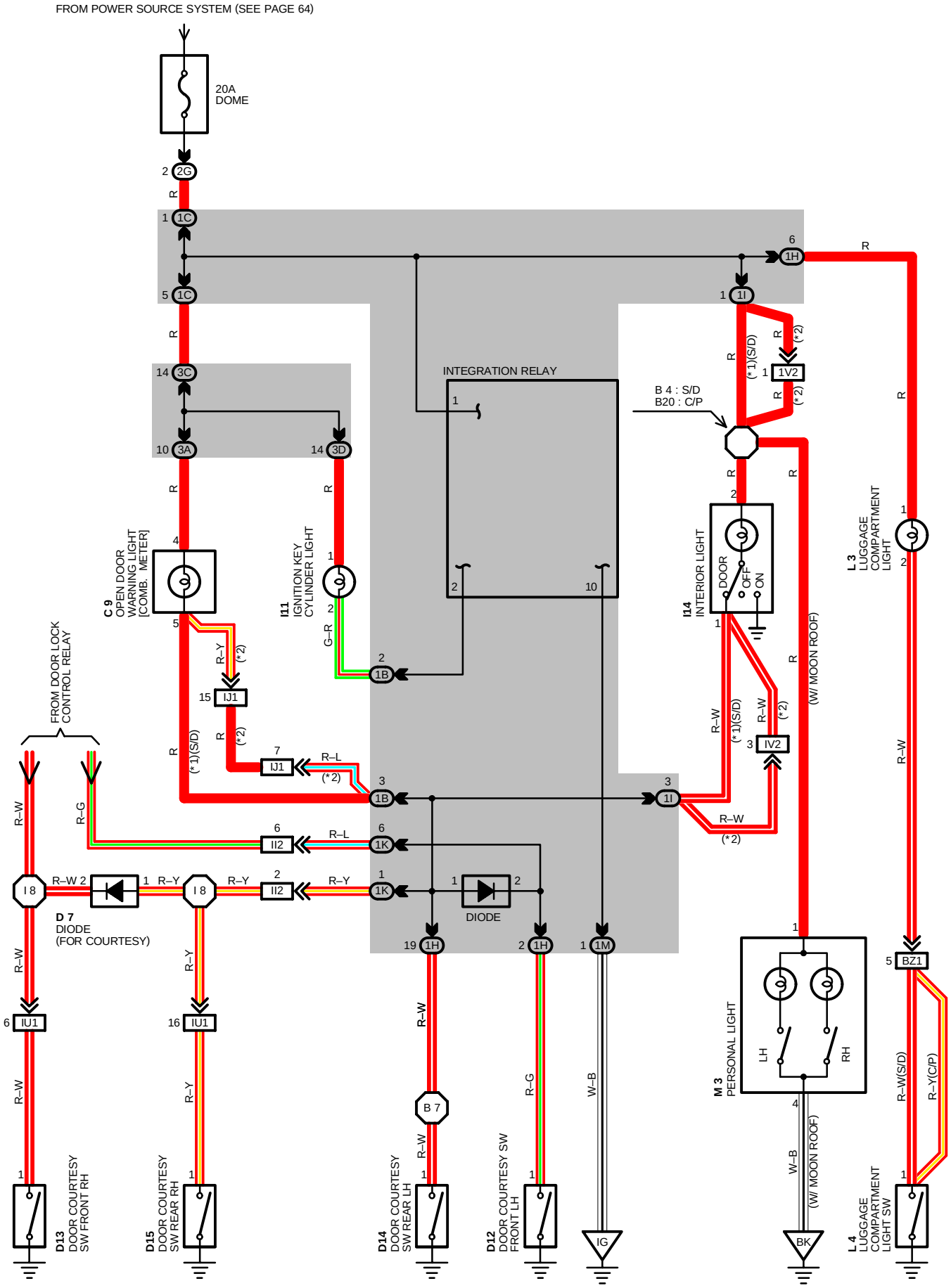

SERVICE HINTS

INTEGRATION RELAY

6–GROUND : APPROX. **12** VOLTS WITH DOOR CLOSED
0 VOLTS WITH EACH DOOR OPEN

D12, D13, D14, D15 DOOR COURTESY SW

1–GROUND : CLOSED WITH DOOR OPEN

L 4 LUGGAGE COMPARTMENT LIGHT SW

1–GROUND : CLOSED WITH LUGGAGE COMPARTMENT DOOR OPEN

: PARTS LOCATION

CODE	SEE PAGE	CODE	SEE PAGE	CODE	SEE PAGE
C 9	32	**D14**	34 (S/D), 35 (C/P)	**J 3**	33
D 7	32	**D15**	34 (S/D), 35 (C/P)	**L 3**	34 (S/D), 35 (C/P)
D12	34 (S/D), 35 (C/P)	**I11**	33	**L 4**	34 (S/D), 35 (C/P)
D13	34 (S/D), 35 (C/P)	**I14**	34 (S/D), 35 (C/P)	**M 3**	34 (S/D), 35 (C/P)

: JUNCTION BLOCK AND WIRE HARNESS CONNECTOR

CODE	SEE PAGE	JUNCTION BLOCK AND WIRE HARNESS (CONNECTOR LOCATION)
1B	20	COWL WIRE AND J/B NO. 1 (INSTRUMENT PANEL LEFT)
1C		
1H	20	FLOOR NO. 1 WIRE J/B NO. 1 (INSTRUMENT PANEL LEFT)
1I	20 (*1)	ROOF WIRE AND J/B NO. 1 (INSTRUMENT PANEL) TMC MADE
	20 (*2)	COWL WIRE AND J/B NO. 1 (INSTRUMENT PANEL) TMM MADE
1K	20	COWL WIRE AND J/B NO. 1 (INSTRUMENT PANEL LEFT)
1M		
2G	22	COWL WIRE AND J/B NO. 2 (ENGINE COMPARTMENT LEFT)
3A	24	COWL WIRE AND J/B NO. 3 (BEHIND COMBINATION METER)
3C		
3D		

: CONNECTOR JOINING WIRE HARNESS AND WIRE HARNESS

CODE	SEE PAGE	JOINING WIRE HARNESS AND WIRE HARNESS (CONNECTOR LOCATION)
II2	42	INSTRUMENT PANEL WIRE AND COWL WIRE
IJ1	42	FLOOR NO. 1 WIRE AND COWL WIRE
IU1	44	FLOOR NO. 2 WIRE AND INSTRUMENT PANEL WIRE
IV2	44	ROOF WIRE AND COWL WIRE MADE IN USA
BZ1	46 (S/D)	LUGGAGE ROOM NO. 1 WIRE AND FLOOR NO. 1 WIRE
	48 (C/P)	

: GROUND POINTS

CODE	SEE PAGE	GROUND POINTS LOCATION
IG	42	INSTRUMENT PANEL BRACE LH
BK	46 (S/D)	ROOF LEFT
	48 (C/P)	

: SPLICE POINTS

CODE	SEE PAGE	WIRE HARNESS WITH SPLICE POINTS	CODE	SEE PAGE	WIRE HARNESS WITH SPLICE POINTS
I 8	44	INSTRUMENT PANEL WIRE	**B 6**	46 (S/D)	FLOOR NO. 1 WIRE
			B 7		
B 4	46 (S/D)	ROOF WIRE	**B20**	48 (C/P)	ROOF WIRE

C 9

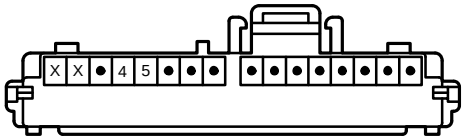

D 7 BLACK



D12, D13, D14, D15



I11 BLUE

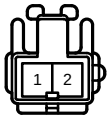

I14

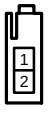

L 3



L 4 GRAY



M 3



INTERIOR LIGHT (W/G w/o KEY ILLUMINATED ENTRY)

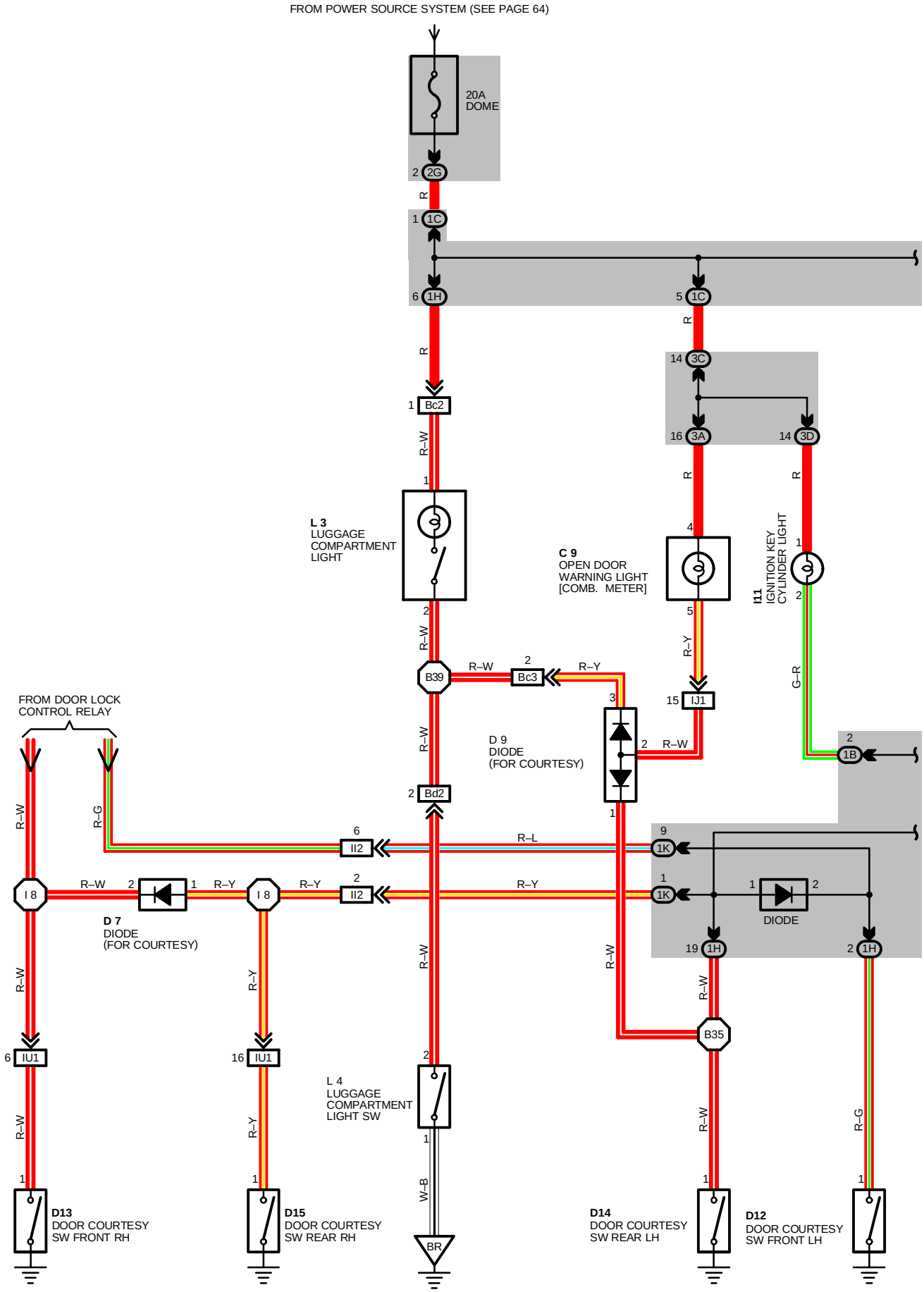

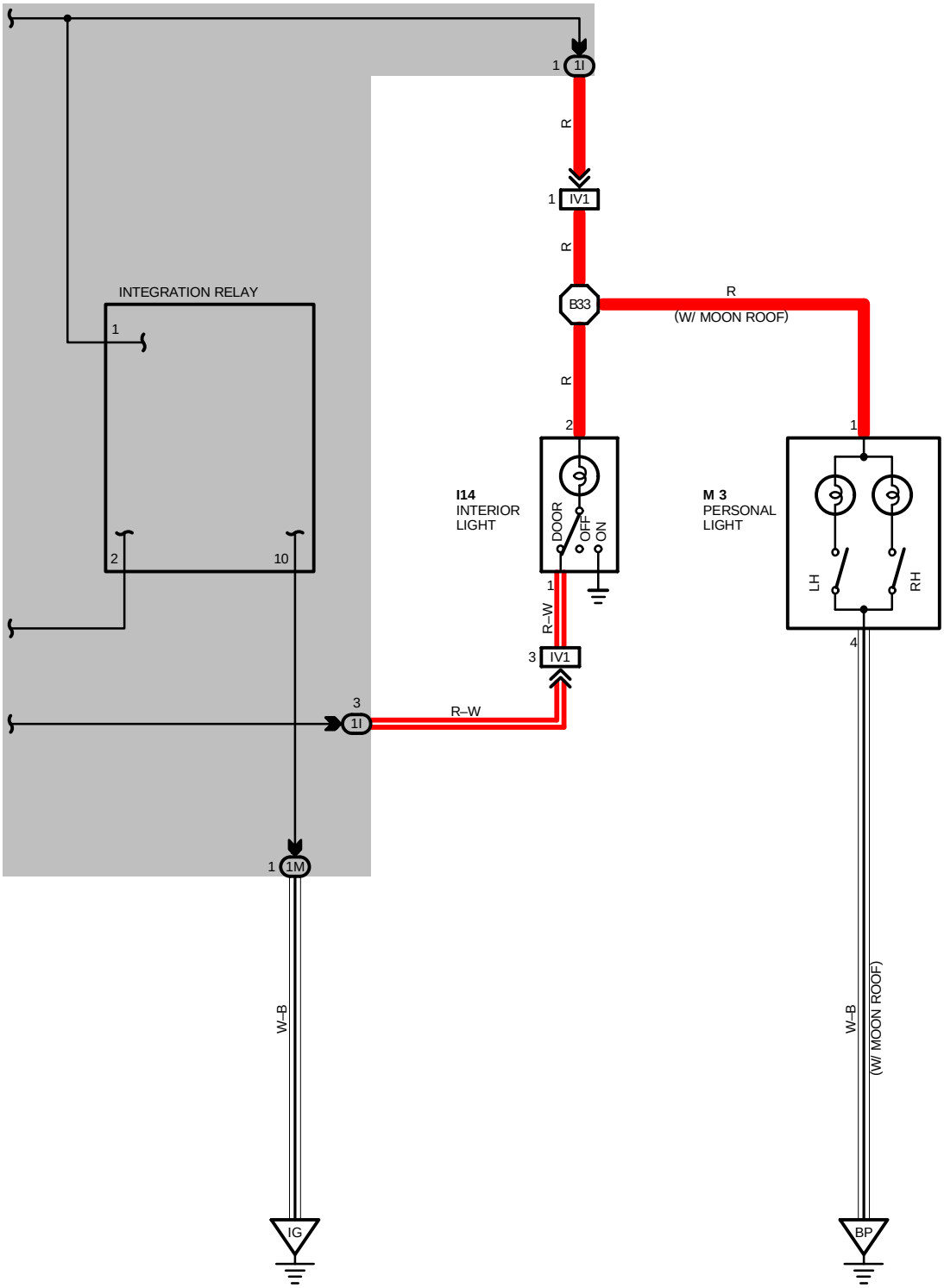
INTEGRATION RELAY
1
2
10
1
1I
R
1
IV1
R
B33
R
(W/ MOON ROOF)
R
2
I14
INTERIOR
LIGHT
DOOR
OFF
ON
1
R–W
3
IV1
3
1I
R–W
1
1M
W–B
IG
1
M 3
PERSONAL
LIGHT
LH
RH
4
W–B
(W/ MOON ROOF)
BP

INTERIOR LIGHT (W/G w/o KEY ILLUMINATED ENTRY)

SERVICE HINTS

INTEGRATION RELAY

6–GROUND : APPROX. **12** VOLTS WITH DOOR CLOSED
0 VOLTS WITH EACH DOOR OPEN

D12, D13, D14, D15 DOOR COURTESY SW

1–GROUND : CLOSED WITH DOOR OPEN

L 4 LUGGAGE COMPARTMENT LIGHT SW

2–1 : CLOSED WITH LUGGAGE COMPARTMENT DOOR OPEN

○ : PARTS LOCATION

CODE	SEE PAGE	CODE	SEE PAGE	CODE	SEE PAGE
C 9	32	**D14**	36 (W/G)	**L 3**	36 (W/G)
D 7	32	**D15**	36 (W/G)	**L 4**	36 (W/G)
D 9	36 (W/G)	**I11**	33	**M 3**	36 (W/G)
D12	36 (W/G)	**I14**	36 (W/G)		
D13	36 (W/G)	**J 3**	33		

⬭ : JUNCTION BLOCK AND WIRE HARNESS CONNECTOR

CODE	SEE PAGE	JUNCTION BLOCK AND WIRE HARNESS (CONNECTOR LOCATION)
1B	20	COWL WIRE AND J/B NO. 1 (INSTRUMENT PANEL LEFT)
1C		
1H	20	FLOOR NO. 1 WIRE J/B NO. 1 (INSTRUMENT PANEL LEFT)
1I	20	ROOF WIRE AND J/B NO. 1 (INSTRUMENT PANEL) TMC MADE
	20	COWL WIRE AND J/B NO. 1 (INSTRUMENT PANEL) TMM MADE
1K	20	COWL WIRE AND J/B NO. 1 (INSTRUMENT PANEL LEFT)
1M		
2E	22	ENGINE ROOM MAIN WIRE AND J/B NO. 2 (ENGINE COMPARTMENT LEFT)
3A	24	COWL WIRE AND J/B NO. 3 (BEHIND COMBINATION METER)
3C		
3D		

▭ : CONNECTOR JOINING WIRE HARNESS AND WIRE HARNESS

CODE	SEE PAGE	JOINING WIRE HARNESS AND WIRE HARNESS (CONNECTOR LOCATION)
IH1	42	FRONT DOOR LH WIRE AND INSTRUMENT PANEL WIRE
IH2		
II2	42	INSTRUMENT PANEL WIRE AND COWL WIRE
IJ1	42	FLOOR NO. 1 WIRE AND COWL WIRE
IT1	44	FRONT DOOR RH WIRE AND INSTRUMENT PANEL WIRE
IT2		
IU1	44	FLOOR NO. 2 WIRE AND INSTRUMENT PANEL WIRE
IV1	44	ROOF WIRE AND COWL WIRE
Bc2	50 (W/G)	BACK DOOR NO. 1 WIRE AND FLOOR NO. 1 WIRE
Bc3		
Bd2	50 (W/G)	BACK DOOR NO. 1 WIRE AND BACK DOOR NO. 2 WIRE

▽ : GROUND POINTS

CODE	SEE PAGE	GROUND POINTS LOCATION
IG	42	INSTRUMENT PANEL BRACE LH
BP	50 (W/G)	BACK PANEL CENTER
BR	50 (W/G)	BACK DOOR CENTER

⯃ : SPLICE POINTS

CODE	SEE PAGE	WIRE HARNESS WITH SPLICE POINTS	CODE	SEE PAGE	WIRE HARNESS WITH SPLICE POINTS
I 8	44	INSTRUMENT PANEL WIRE	**B35**	50 (W/G)	FLOOR NO. 1 WIRE
B33	50 (W/G)	ROOF WIRE	**B39**	50 (W/G)	BACK DOOR NO. 1 WIRE

C 9

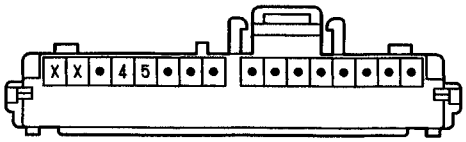

D 7 BLACK



D 9 BLACK



D12, D13, D14, D15



I11 BLUE



I14

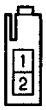

L 3

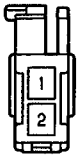

L 4 GRAY

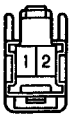

M 3



TAILLIGHT (S/D, C/P)

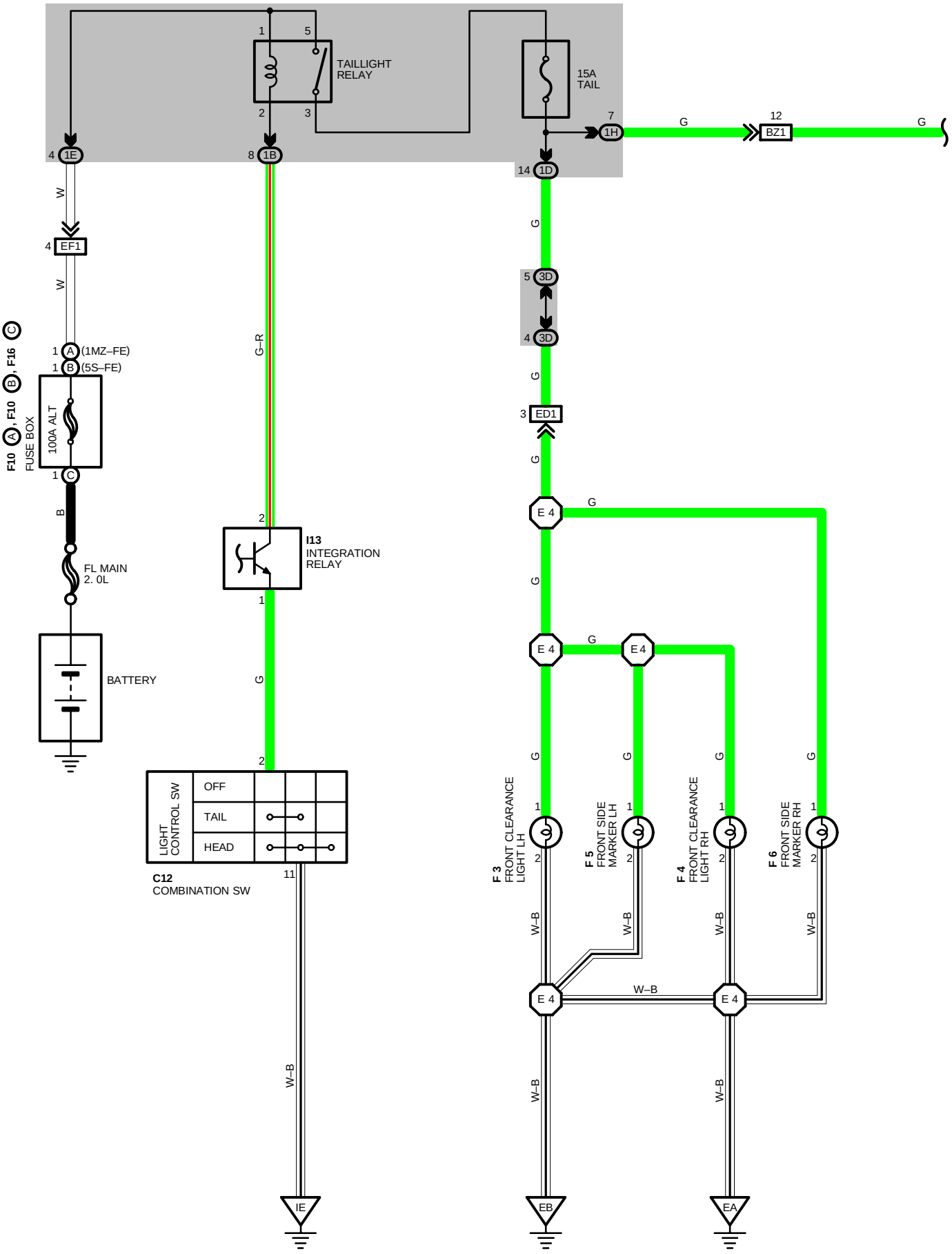

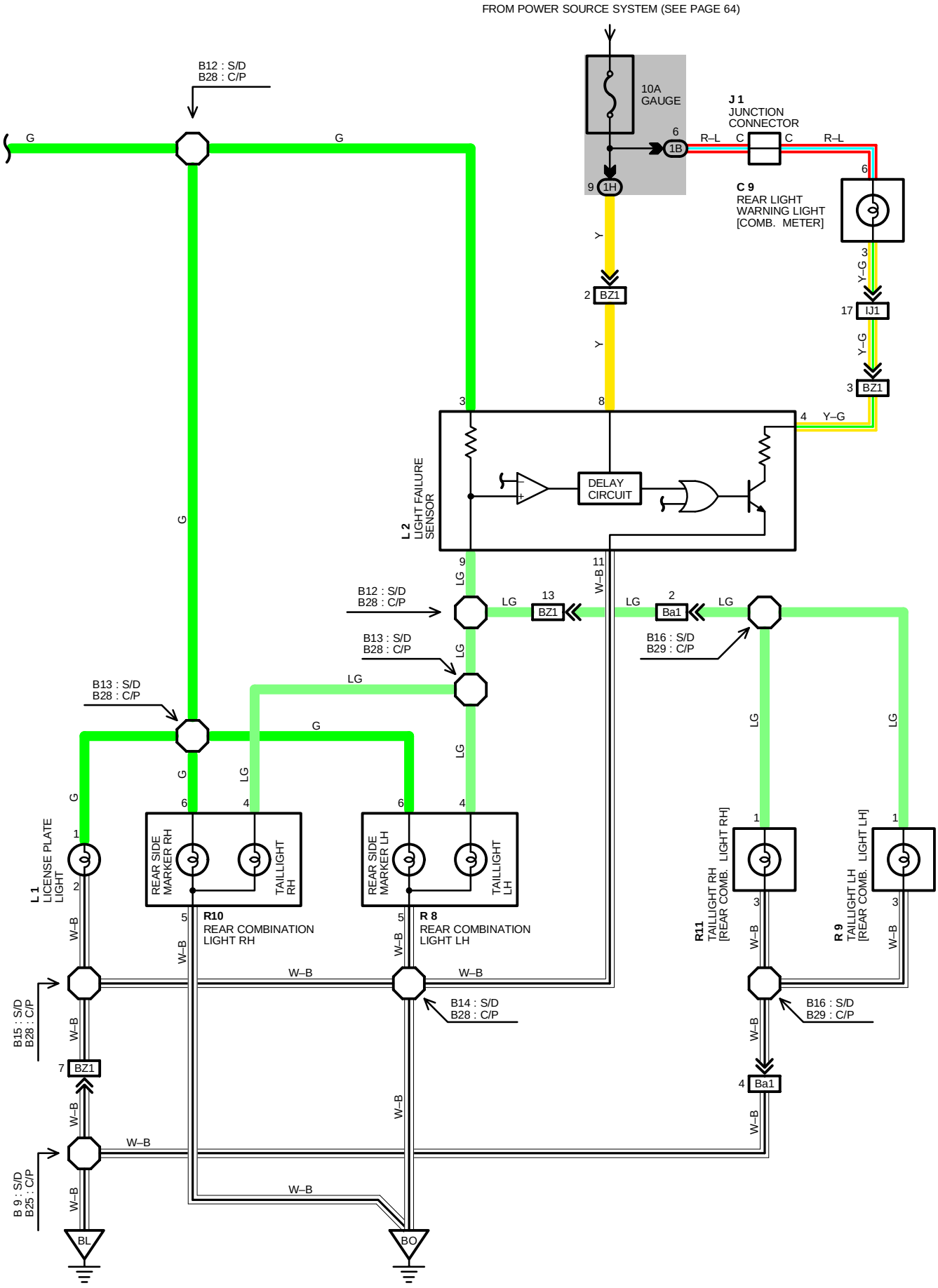
FROM POWER SOURCE SYSTEM (SEE PAGE 64)
B12 : S/D
B28 : C/P
10A
GAUGE
J 1
JUNCTION
CONNECTOR
R–L
C
C
R–L
6
1B
9
1H
C 9
REAR LIGHT
WARNING LIGHT
[COMB. METER]
Y
2
BZ1
Y
3
Y–G
17
IJ1
Y–G
3
BZ1
3
8
4
Y–G
L 2
LIGHT FAILURE
SENSOR
DELAY
CIRCUIT
9
LG
11
W–B
B12 : S/D
B28 : C/P
LG
13
BZ1
LG
2
Ba1
LG
B16 : S/D
B29 : C/P
B13 : S/D
B28 : C/P
LG
B13 : S/D
B28 : C/P
LG
G
G
LG
G
LG
G
6
4
6
4
L 1
LICENSE PLATE
LIGHT
1
2
REAR SIDE
MARKER RH
TAILLIGHT
RH
REAR SIDE
MARKER LH
TAILLIGHT
LH
5
R10
REAR COMBINATION
LIGHT RH
5
R 8
REAR COMBINATION
LIGHT LH
W–B
W–B
W–B
W–B
W–B
B14 : S/D
B28 : C/P
B15 : S/D
B28 : C/P
7
BZ1
W–B
W–B
W–B
W–B
W–B
B 9 : S/D
B25 : C/P
BL
BO
1
1
R11
TAILLIGHT RH
[REAR COMB. LIGHT RH]
R 9
TAILLIGHT LH
[REAR COMB. LIGHT LH]
3
3
W–B
W–B
B16 : S/D
B29 : C/P
W–B
4
Ba1
W–B

TAILLIGHT (S/D, C/P)

SYSTEM OUTLINE

WHEN THE LIGHT CONTROL SW IS TURNED TO **TAIL** OR **HEAD** POSITION, THE CURRENT FLOWS TO **TERMINAL 3** OF THE LIGHT FAILURE SENSOR THROUGH THE **TAIL** FUSE.

WHEN THE IGNITION SW IS TURNED ON, THE CURRENT FLOWS FROM THE **GAUGE** FUSE TO **TERMINAL 8** OF THE LIGHT FAILURE SENSOR, AND ALSO FLOWS THROUGH THE REAR LIGHTS WARNING LIGHT TO **TERMINAL 4** OF THE LIGHT FAILURE SENSOR.

TAILLIGHT DISCONNECTION WARNING

WHEN THE IGNITION SW ON AND THE LIGHT CONTROL SW TURNED TO **TAIL** OR **HEAD** POSITION, IF THE TAILLIGHT CIRCUIT IS OPEN, THE LIGHT FAILURE SENSOR DETECTS THE FAILURE BY THE CHANGE IN CURRENT FLOWING FROM **TERMINAL 3** OF THE LIGHT FAILURE SENSOR TO **TERMINAL 9** AND THE WARNING CIRCUIT OF THE LIGHT FAILURE SENSOR IS ACTIVATED.

AS A RESULT, THE CURRENT FLOWS FLOM **TERMINAL 4** OF THE LIGHT FAILURE SENSOR → **TERMINAL 11** → **GROUND** AND TURNS THE REAR LIGHT WARNING LIGHT ON, WHICH REMAINS ON UNTIL THE LIGHT CONTROL SW IS TURNED OFF.

SERVICE HINTS

TAILLIGHT RELAY

1–4 : CLOSED WITH LIGHT CONTROL SW AT **TAIL** OR **HEAD** POSITION

L 2 LIGHT FAILURE SENSOR

4, 8–GROUND : APPROX. **12** VOLTS WITH IGNITION SW AT **ON** POSITION

3–GROUND : APPROX **12** VOLTS WITH LIGHT CONTROL SW AT **TAIL** OR **HEAD** POSITION

11–GROUND : ALWAYS CONTINUITY

○ : PARTS LOCATION

CODE	SEE PAGE	CODE		SEE PAGE	CODE	SEE PAGE
C 9	32	**F 6**		28 (1MZ–FE), 30 (5S–FE)	**L 1**	34 (S/D), 35 (C/P)
C12	32	**F10**	A	28 (1MZ–FE), 30 (5S–FE)	**L 2**	34 (S/D), 35 (C/P)
D 4	32		B	28 (1MZ–FE), 30 (5S–FE)	**R 8**	34 (S/D), 35 (C/P)
F 3	28 (1MZ–FE), 30 (5S–FE)	**F16**	C	28 (1MZ–FE), 30 (5S–FE)	**R 9**	34 (S/D), 35 (C/P)
F 4	28 (1MZ–FE), 30 (5S–FE)	**I13**		33	**R10**	34 (S/D), 35 (C/P)
F 5	28 (1MZ–FE), 30 (5S–FE)	**J 1**		33	**R11**	34 (S/D), 35 (C/P)

⬭ : JUNCTION BLOCK AND WIRE HARNESS CONNECTOR

CODE	SEE PAGE	JUNCTION BLOCK AND WIRE HARNESS (CONNECTOR LOCATION)
1B	20	COWL WIRE AND J/B NO. 1 (INSTRUMENT PANEL LEFT)
1D		
1E		
1H	20	FLOOR NO. 1 WIRE J/B NO. 1 (INSTRUMENT PANEL LEFT)
3D	24	COWL WIRE AND J/B NO. 3 (BEHIND COMBINATION METER)

▭ : CONNECTOR JOINING WIRE HARNESS AND WIRE HARNESS

CODE	SEE PAGE	JOINING WIRE HARNESS AND WIRE HARNESS (CONNECTOR LOCATION)
ED1	38 (1MZ–FE)	COWL WIRE AND ENGINE ROOM MAIN WIRE
	40 (5S–FE)	
EF1	38 (1MZ–FE)	ENGINE WIRE AND COWL WIRE
	40 (5S–FE)	
IJ1	42	FLOOR NO. 1 WIRE AND COWL WIRE
BZ1	46 (S/D)	LUGGAGE ROOM NO. 1 WIRE AND FLOOR NO. 1 WIRE
	48 (C/P)	
Ba1	46 (S/D)	FLOOR NO. 1 WIRE AND LUGGAGE ROOM NO. 2 WIRE
	46 (S/D)	

▽ : GROUND POINTS

CODE	SEE PAGE	GROUND POINTS LOCATION
EA	38 (1MZ–FE)	FRONT RIGHT FENDER
	40 (5S–FE)	
EB	38 (1MZ–FE)	FRONT LEFT FENDER
	40 (5S–FE)	
IE	42	LEFT KICK PANEL
BL	46 (S/D)	UNDER THE LEFT QUARTER PILLAR
	48 (C/P)	
	50 (W/G)	
BQ	50 (W/G)	LOWER BACK PANEL CENTER

: SPLICE POINTS

CODE	SEE PAGE	WIRE HARNESS WITH SPLICE POINTS	CODE	SEE PAGE	WIRE HARNESS WITH SPLICE POINTS
E 4	38 (1MZ–FE)	ENGINE ROOM MAIN WIRE	**B15**	46 (S/D)	LUGGAGE ROOM NO. 1 WIRE
	40 (5S–FE)		**B16**	46 (S/D)	LUGGAGE ROOM NO. 2 WIRE
B 9	46 (S/D)	FLOOR NO. 1 WIRE	**B25**	48 (C/P)	FLOOR NO. 1 WIRE
B12	46 (S/D)	LUGGAGE ROOM NO. 1 WIRE	**B28**	48 (C/P)	LUGGAGE ROOM NO. 1 WIRE
B13			**B29**	48 (C/P)	LUGGAGE ROOM NO. 2 WIRE
B14					

C 9

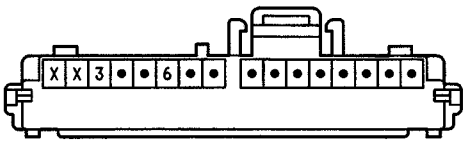

C12 BLACK

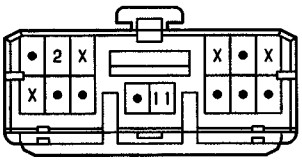

F 3, F 4, F 5, F 6 GRAY



(1MZ-FE) F10 Ⓐ

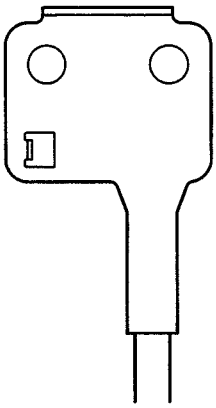

(5S-FE) F10 Ⓑ



F16 Ⓒ

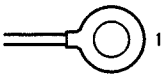

I13



J 1 DARK GRAY

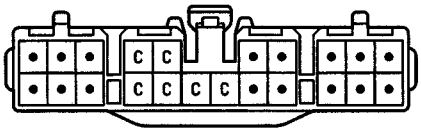

(HINT:SEE PAGE 7)

L 1

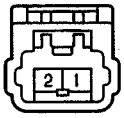

L 2

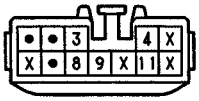

R 8, R10

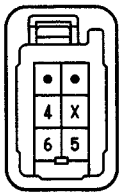

R 9, R11

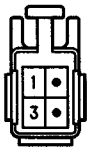

TAILLIGHT (W/G)

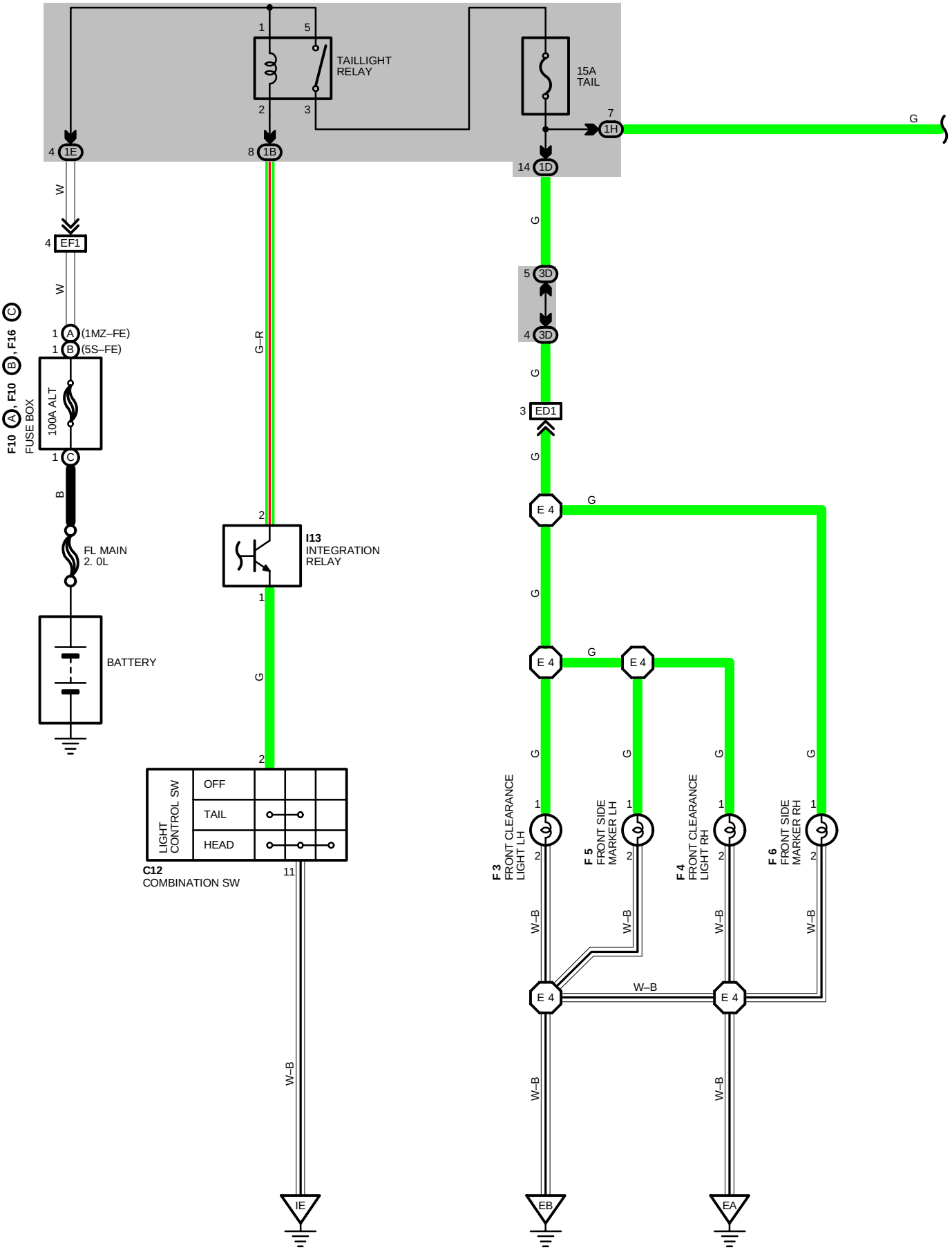

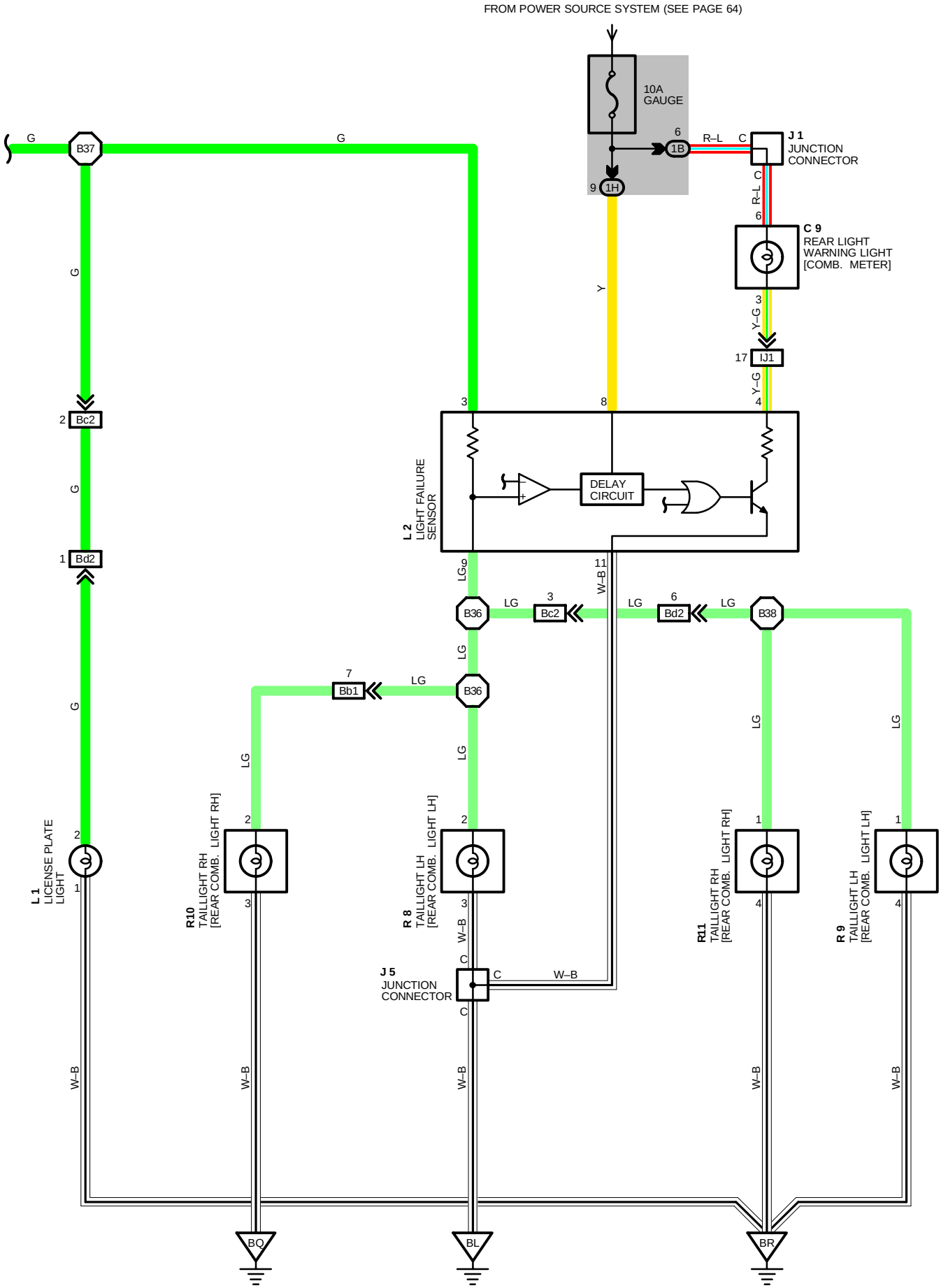
FROM POWER SOURCE SYSTEM (SEE PAGE 64)
10A
GAUGE
6
1B
9
1H
R–L
C
J 1
JUNCTION
CONNECTOR
C
R–L
6
C 9
REAR LIGHT
WARNING LIGHT
[COMB. METER]
3
Y–G
17
IJ1
Y–G
4
Y
G
B37
G
G
2
Bc2
G
1
Bd2
G
3
8
L 2
LIGHT FAILURE
SENSOR
DELAY
CIRCUIT
9
LG
11
W–B
B36
LG
3
Bc2
LG
6
Bd2
LG
B38
LG
7
Bb1
LG
B36
LG
LG
LG
LG
2
2
2
1
1
L 1
LICENSE PLATE
LIGHT
1
R10
TAILLIGHT RH
[REAR COMB. LIGHT RH]
R 8
TAILLIGHT LH
[REAR COMB. LIGHT LH]
R11
TAILLIGHT RH
[REAR COMB. LIGHT RH]
R 9
TAILLIGHT LH
[REAR COMB. LIGHT LH]
3
3
4
4
W–B
W–B
W–B
W–B
W–B
C
C
W–B
J 5
JUNCTION
CONNECTOR
C
BQ
BL
BR

TAILLIGHT (W/G)

SYSTEM OUTLINE

WHEN THE LIGHT CONTROL SW IS TURNED TO **TAIL** OR **HEAD** POSITION, THE CURRENT FLOWS TO **TERMINAL 3** OF THE LIGHT FAILURE SENSOR THROUGH THE **TAIL** FUSE.

WHEN THE IGNITION SW IS TURNED ON, THE CURRENT FLOWS FROM THE **GAUGE** FUSE TO **TERMINAL 8** OF THE LIGHT FAILURE SENSOR, AND ALSO FLOWS THROUGH THE REAR LIGHTS WARNING LIGHT TO **TERMINAL 4** OF THE LIGHT FAILURE SENSOR.

TAILLIGHT DISCONNECTION WARNING

WITH THE IGNITION SW ON AND THE LIGHT CONTROL SW TURNED TO **TAIL** OR **HEAD** POSITION, IF THE TAILLIGHT CIRCUIT IS OPEN, THE LIGHT FAILURE SENSOR DETECTS THE FAILURE BY THE CHANGE IN CURRENT FLOWING FROM **TERMINAL 3** OF THE LIGHT FAILURE SENSOR TO **TERMINAL 9** AND THE WARNING CIRCUIT OF THE LIGHT FAILURE SENSOR IS ACTIVATED.

AS A RESULT, THE CURRENT FLOWS FROM **TERMINAL 4** OF THE LIGHT FAILURE SENSOR → **TERMINAL 11** → **GROUND** AND TURNS THE REAR LIGHT WARNING LIGHT ON, WHICH REMAINS ON UNTIL THE LIGHT CONTROL SW IS TURNED OFF.

SERVICE HINTS

TAILLIGHT RELAY
3–5 : CLOSED WITH LIGHT CONTROL SW AT **TAIL** OR **HEAD** POSITION

L 2 LIGHT FAILURE SENSOR
4, 8–GROUND : APPROX. **12** VOLTS WITH IGNITION SW AT **ON** POSITION
3–GROUND : APPROX **12** VOLTS WITH LIGHT CONTROL SW AT **TAIL** OR **HEAD** POSITION
11–GROUND : ALWAYS CONTINUITY

○ : PARTS LOCATION

CODE	SEE PAGE	CODE		SEE PAGE	CODE	SEE PAGE
C 9	32	**F10**	A	28 (1MZ–FE), 30 (5S–FE)	**L 1**	36 (W/G)
C12	32		B	28 (1MZ–FE), 30 (5S–FE)	**L 2**	36 (W/G)
F 3	28 (1MZ–FE), 30 (5S–FE)	**F16**	C	28 (1MZ–FE), 30 (5S–FE)	**R 8**	36 (W/G)
F 4	28 (1MZ–FE), 30 (5S–FE)	**I13**		33	**R 9**	36 (W/G)
F 5	28 (1MZ–FE), 30 (5S–FE)	**J 1**		33	**R10**	36 (W/G)
F 6	28 (1MZ–FE), 30 (5S–FE)	**J 5**		36 (W/G)	**R11**	36 (W/G)

⬭ : JUNCTION BLOCK AND WIRE HARNESS CONNECTOR

CODE	SEE PAGE	JUNCTION BLOCK AND WIRE HARNESS (CONNECTOR LOCATION)
1B	20	COWL WIRE AND J/B NO. 1 (INSTRUMENT PANEL LEFT)
1D		
1E		
1H	20	FLOOR NO. 1 WIRE J/B NO. 1 (INSTRUMENT PANEL LEFT)
3D	24	COWL WIRE AND J/B NO. 3 (BEHIND COMBINATION METER)

▭ : CONNECTOR JOINING WIRE HARNESS AND WIRE HARNESS

CODE	SEE PAGE	JOINING WIRE HARNESS AND WIRE HARNESS (CONNECTOR LOCATION)
ED1	38 (1MZ–FE)	COWL WIRE AND ENGINE ROOM MAIN WIRE
	40 (5S–FE)	
EF1	38 (1MZ–FE)	ENGINE WIRE AND COWL WIRE
	40 (5S–FE)	
IJ1	42	FLOOR NO. 1 WIRE AND COWL WIRE
Bb1	50 (W/G)	LUGGAGE ROOM NO. 1 WIRE AND FLOOR NO. 1 WIRE
Bc2	50 (W/G)	BACK DOOR NO. 1 WIRE AND FLOOR NO. 1 WIRE
Bd2	50 (W/G)	BACK DOOR NO. 1 WIRE AND BACK DOOR NO. 2 WIRE

▽ : GROUND POINTS

CODE	SEE PAGE	GROUND POINTS LOCATION
EA	38 (1MZ–FE)	FRONT RIGHT FENDER
	40 (5S–FE)	
EB	38 (1MZ–FE)	FRONT LEFT FENDER
	40 (5S–FE)	
IE	42	LEFT KICK PANEL
BL	46 (S/D)	UNDER THE LEFT QUARTER PILLAR
	48 (C/P)	
	50 (W/G)	
BQ	50 (W/G)	LOWER BACK PANEL CENTER
BR	50 (W/G)	BACK DOOR CENTER

: SPLICE POINTS

CODE	SEE PAGE	WIRE HARNESS WITH SPLICE POINTS	CODE	SEE PAGE	WIRE HARNESS WITH SPLICE POINTS
E 4	38 (1MZ–FE)	ENGINE ROOM MAIN WIRE	**B37**	50 (W/G)	FLOOR NO. 1 WIRE
	40 (5S–FE)		**B38**	50 (W/G)	BACK DOOR NO. 2 WIRE
B36	50 (W/G)	FLOOR NO. 1 WIRE			

C 9

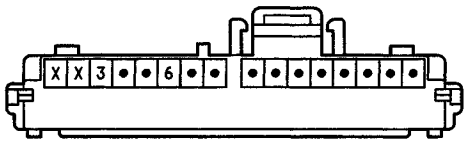

C12 BLACK

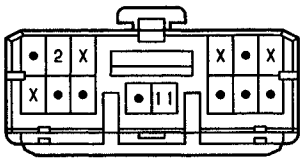

F 3, F 4, F 5, F 6 GRAY



(1MZ-FE) F10 Ⓐ

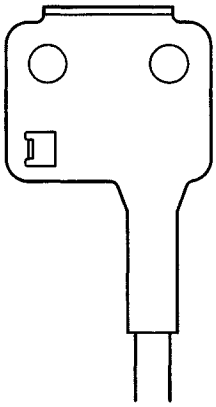

(5S-FE) F10 Ⓑ

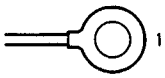

F16 Ⓒ



I13



J 1 DARK GRAY

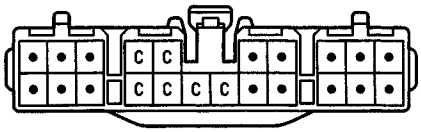

(HINT:SEE PAGE 7)

J 5

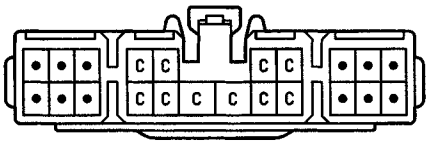

(HINT:SEE PAGE 7)

L 1



L 2

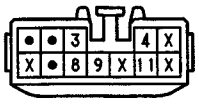

R 8

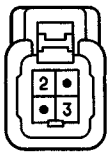

R10

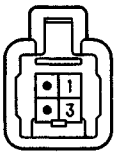

R 9, R11

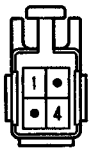

BACK–UP LIGHT

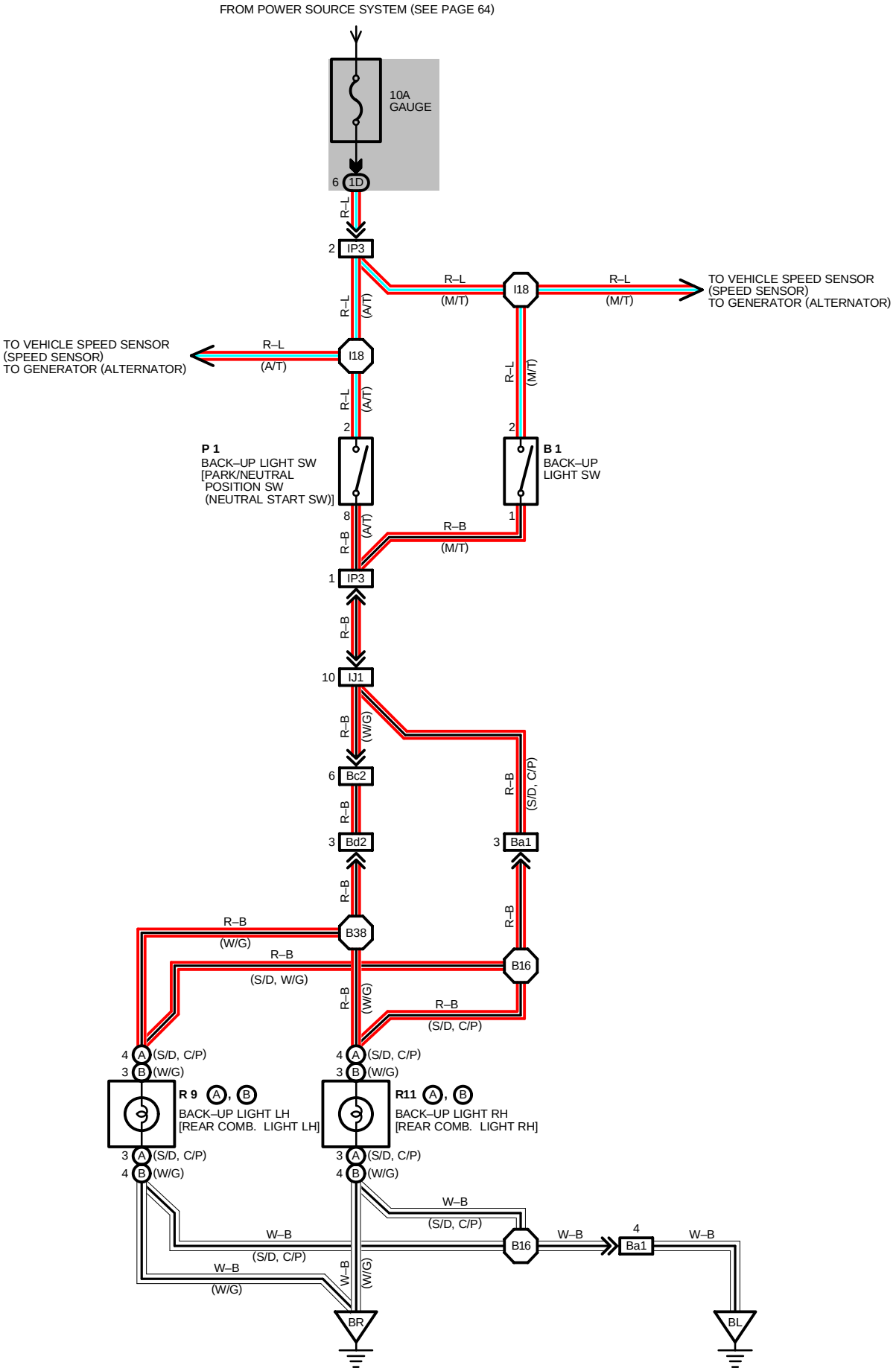

SERVICE HINTS

B 1 BACK–UP LIGHT SW
2–1 : CLOSED WITH SHIFT LEVER IN **R** POSITION

P 1 BACK–UP LIGHT SW [PARK/NEUTRAL POSITION SW (NEUTRAL START SW)]
6–5 : CLOSED WITH SHIFT LEVER IN **R** POSITION

: PARTS LOCATION

CODE	SEE PAGE	CODE	SEE PAGE	CODE	SEE PAGE
B 1	30	**R 9**	34 (S/D), 35 (C/P), 36 (W/G)		
P 1	29 (1MZ–FE), 31 (5S–FE)	**R11**	34 (S/D), 35 (C/P), 36 (W/G)		

: JUNCTION BLOCK AND WIRE HARNESS CONNECTOR

CODE	SEE PAGE	JUNCTION BLOCK AND WIRE HARNESS (CONNECTOR LOCATION)
1D	20	COWL WIRE AND J/B NO. 1 (INSTRUMENT PANEL LEFT)

: CONNECTOR JOINING WIRE HARNESS AND WIRE HARNESS

CODE	SEE PAGE	JOINING WIRE HARNESS AND WIRE HARNESS (CONNECTOR LOCATION)
IJ1	42	FLOOR NO. 1 WIRE AND COWL WIRE
IP3	44	ENGINE WIRE AND COWL WIRE
Ba1	46 (S/D)	FLOOR NO. 1 WIRE AND LUGGAGE ROOM NO. 2 WIRE
	48 (C/P)	
Bc2	50 (W/G)	BACK DOOR NO. 1 WIRE AND FLOOR NO. 1 WIRE
Bd2	50 (W/G)	BACK DOOR NO. 1 WIRE AND BACK DOOR NO. 2 WIRE

: GROUND POINTS

CODE	SEE PAGE	GROUND POINTS LOCATION
BL	46 (S/D)	UNDER THE LEFT QUARTER PILLAR
	48 (C/P)	
	50 (W/G)	
BR	50 (W/G)	BACK DOOR CENTER

: SPLICE POINTS

CODE	SEE PAGE	WIRE HARNESS WITH SPLICE POINTS	CODE	SEE PAGE	WIRE HARNESS WITH SPLICE POINTS
I18	44	ENGINE WIRE	**B38**	50 (W/G)	BACK DOOR NO. 2 WIRE
B16	46 (S/D)	LUGGAGE ROOM NO. 2 WIRE			

B 1 GRAY

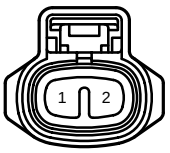

P 1 GRAY

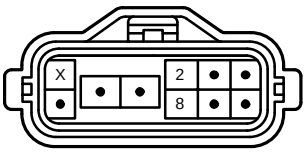

R 9 Ⓐ, Ⓑ, **R11** Ⓐ, Ⓑ

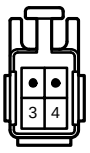

REMOTE CONTROL MIRROR

*1 : TMC MADE
*2 : TMM MADE

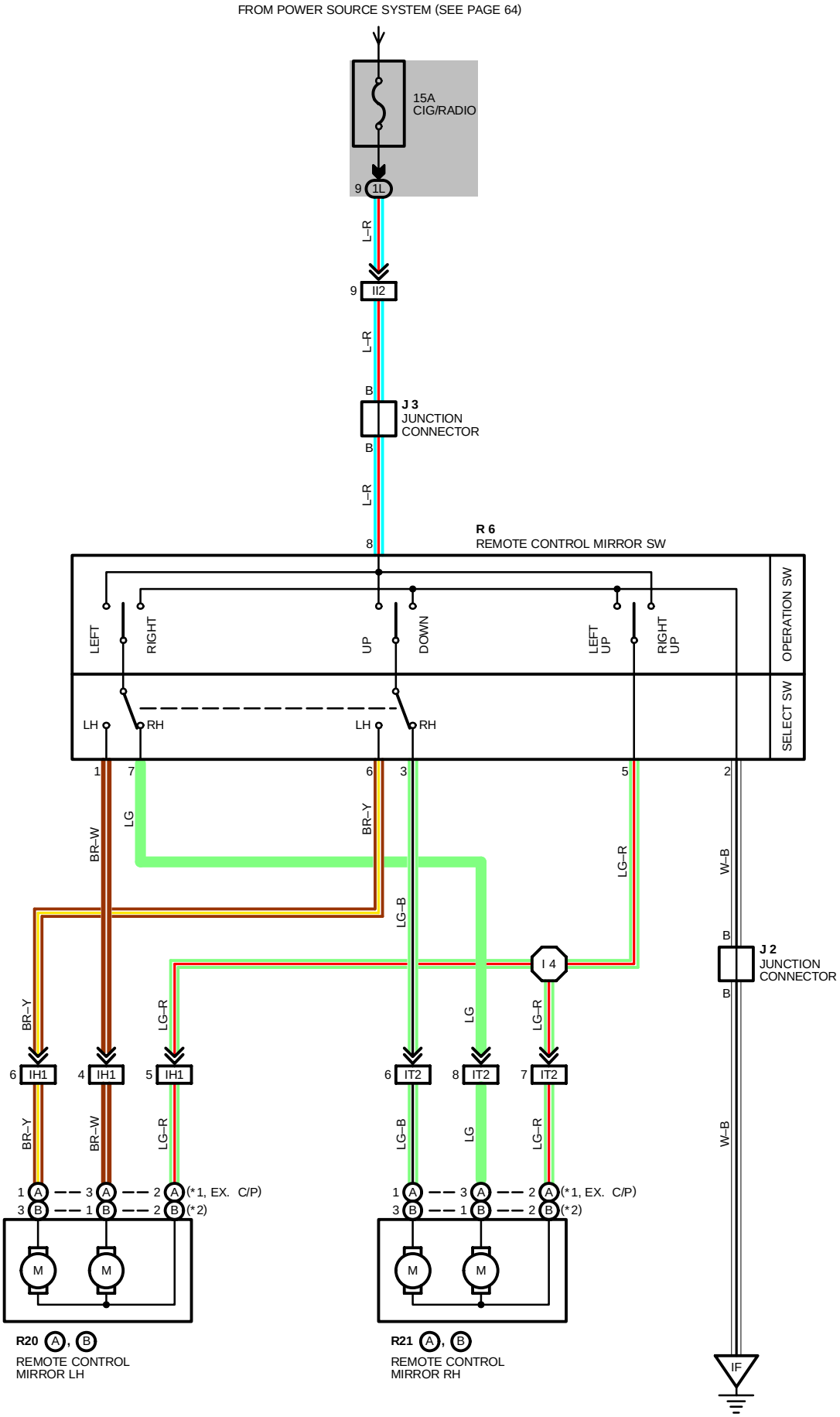

SERVICE HINTS

R 6 REMOTE CONTROL MIRROR SW

8–GROUND : APPROX. **12** VOLTS WITH IGNITION SW AT **ACC** OR **ON** POSITION
5–2 : CONTINUITY WITH OPERATION SW AT **UP** OR **LEFT** POSITION
5–8 : CONTINUITY WITH OPERATION SW AT **DOWN** OR **RIGHT** POSITION

: PARTS LOCATION

CODE	SEE PAGE	CODE	SEE PAGE	CODE	SEE PAGE
J 2	33	**R 6**	33	**R21**	34 (S/D), 35 (C/P), 36 (W/G)
J 3	33	**R20**	34 (S/D), 35 (C/P), 36 (W/G)		

: JUNCTION BLOCK AND WIRE HARNESS CONNECTOR

CODE	SEE PAGE	JUNCTION BLOCK AND WIRE HARNESS (CONNECTOR LOCATION)
1L	20	COWL WIRE AND J/B NO. 1 (INSTRUMENT PANEL LEFT)

: CONNECTOR JOINING WIRE HARNESS AND WIRE HARNESS

CODE	SEE PAGE	JOINING WIRE HARNESS AND WIRE HARNESS (CONNECTOR LOCATION)
IH1	42	FRONT DOOR LH WIRE AND INSTRUMENT PANEL WIRE
II2	42	INSTRUMENT PANEL WIRE AND COWL WIRE
IT2	44	FRONT DOOR RH WIRE AND INSTRUMENT PANEL WIRE

: GROUND POINTS

CODE	SEE PAGE	GROUND POINTS LOCATION
IF	42	LEFT KICK PANEL

: SPLICE POINTS

CODE	SEE PAGE	WIRE HARNESS WITH SPLICE POINTS	CODE	SEE PAGE	WIRE HARNESS WITH SPLICE POINTS
I 4	44	INSTRUMENT PANEL WIRE			

J 2

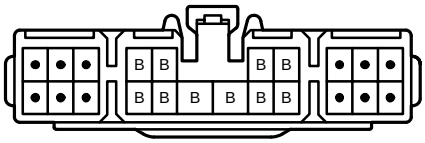

(HINT : SEE PAGE 7)

J 3

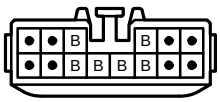

(HINT : SEE PAGE 7)

R 6



(*1, EX. C/P) **R20** Ⓐ, **R21** Ⓐ



(*2) **R20** Ⓑ, **R21** Ⓑ



POWER WINDOW

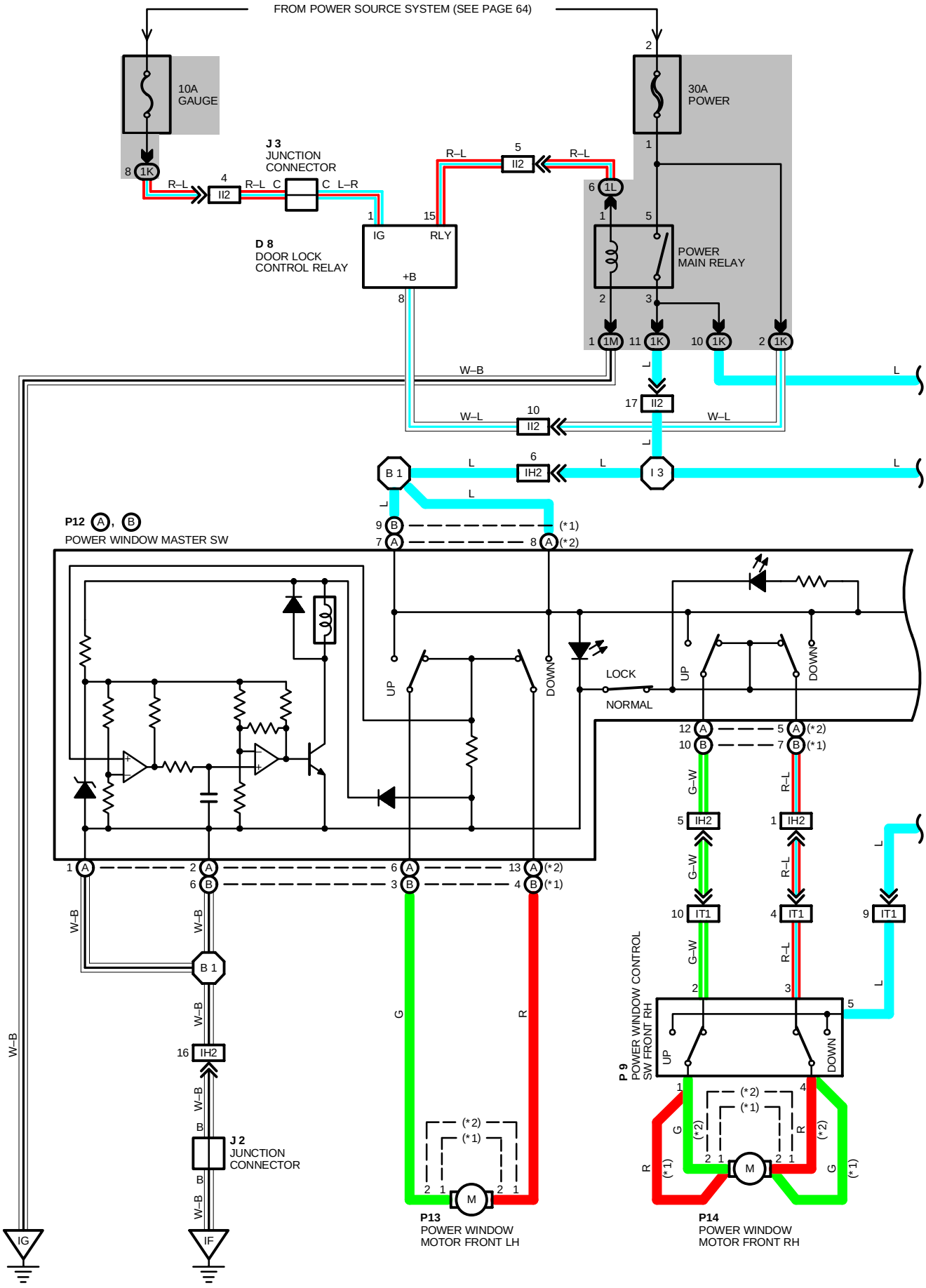

*1 : C/P
*2 : S/D, W/G

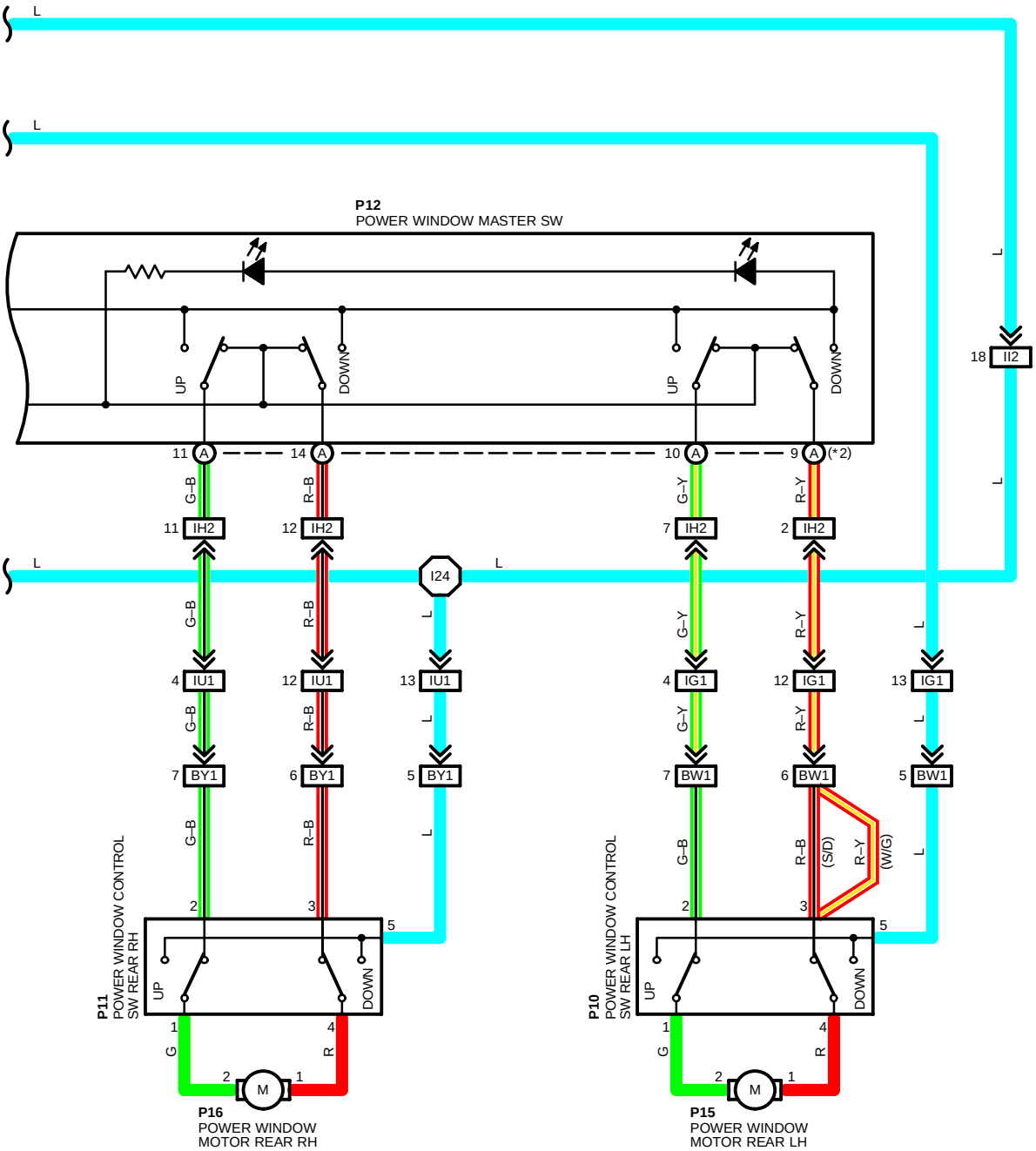
L
P12
POWER WINDOW MASTER SW
UP
DOWN
11 A
14 A
10 A
9 A (*2)
18 II2
G–B
R–B
G–Y
R–Y
11 IH2
12 IH2
7 IH2
2 IH2
I24
4 IU1
12 IU1
13 IU1
4 IG1
12 IG1
13 IG1
7 BY1
6 BY1
5 BY1
7 BW1
6 BW1
5 BW1
(S/D)
(W/G)
P11
POWER WINDOW CONTROL
SW REAR RH
P10
POWER WINDOW CONTROL
SW REAR LH
G
R
M
P16
POWER WINDOW
MOTOR REAR RH
P15
POWER WINDOW
MOTOR REAR LH

POWER WINDOW

SYSTEM OUTLINE

WHEN THE IGNITION SW IS TURNED ON, CURRENT FLOWS THROUGH THE **GAUGE** FUSE TO **TERMINAL 1** OF THE POWER MAIN RELAY → **TERMINAL 2** → TO **GROUND**. THIS ACTIVATES THE RELAY AND THE CURRENT FLOWING TO **TERMINAL 5** OF THE RELAY FROM **POWER** FUSE FLOWS TO **TERMINAL 3** OF THE RELAY → **TERMINAL 7** OR **8** (EX. C/P), **9** (C/P) OF THE POWER WINDOW MASTER SW → TO **TERMINAL 5** OF THE POWER WINDOW SW.

1. MANUAL OPERATION (DRIVER'S WINDOW)

WITH THE IGNITION SW TURNED ON AND WITH THE POWER WINDOW MASTER SW (MANUAL SW) IN **UP** POSITION. THE CURRENT FLOWING TO **TERMINAL 7** OR **8** (EX. C/P), **9** (C/P) OF THE POWER WINDOW MASTER SW FLOWS TO **TERMINAL 6** (EX. C/P), **3** (C/P) OF THE MASTER SW → **TEMINAL 2** OF THE POWER WINDOW MOTOR → **TERMINAL 1** → **TERMINAL 13** (EX. C/P), **4** (C/P) OF THE MASTER SW → **TERMINAL 2** OR **1** (EX. C/P), **6** (C/P) → TO **GROUND** AND CAUSES THE POWER WINDOW MOTOR TO ROTATE IN THE UP DIRECTION. THE WINDOW ASCENDS ONLY WHILE THE SW IS BEING PUSHED. IN DOWN OPERATION, THE FLOW OF CURRENT FROM **TERMINAL 7** OR **8** (EX. C/P), **9** (C/P) OF THE POWER WINDOW MASTER SW TO **TERMINAL 13** (EX. C/P), **4** (C/P) OF THE MASTER SW CAUSES THE FLOW OF CURRENT FROM **TERMINAL 1** OF THE MOTOR → **TERMINAL 2** → **TERMINAL 6** (EX. C/P), **3** (C/P) OF THE MASTER SW → **TERMINAL 2** OR **1** (EX. C/P), **3** (C/P) → TO **GROUND**, FLOWING IN THE OPPOSITE DIRECTION TO MANUAL UP OPERATION AND CAUSING THE MOTOR TO ROTATE IN REVERSE LOWERING THE WINDOW.

2. AUTO DOWN OPERATION

WITH THE IGNITION SW ON AND WITH THE AUTO SW OF THE POWER WINDOW MASTER SW IN **DOWN** POSITION, CURRENT FLOWING TO **TERMINAL 7** OR **8** OF THE MASTER SW FLOWS TO **TERMINAL 13** (EX, C/P), **4** (C/P) OF THE MASTER SW → **TERMINAL 1** OF THE POWER WINDOW MOTOR → **TERMINAL 2** → **TERMINAL 6** (EX. C/P), **3** (C/P) OF THE MASTER SW → **TERMINAL 2** (EX. C/P), **6** (C/P) → TO **GROUND**, CAUSING THE MOTOR TO ROTATE TOWARDS THE DOWN SIDE THEN THE SOLENOID IN THE MASTER SW IS ACTIVATED AND IT LOCKS THE AUTO SW BEING PUSHED, CAUSING THE MOTOR TO CONTINUE TO ROTATE IN AUTO DOWN OPERATION. WHEN THE WINDOW HAS COMPLETELY DESENDED, THE CURRENT FLOW BETWEEN **TERMINAL 6** (EX. C/P), **3** (C/P) OF THE MASTER SW AND **TERMINAL 2** (EX. C/P), **6** (C/P) INCREASES. AS A RESULT, THE SOLENOID STOPS OPERATING, THE AUTO SW TURNS OFF AND FLOW FROM **TERMINAL 7** (EX. C/P), **9** (C/P) OF THE MASTER SW TO **TERMINAL 13** (EX. C/P), **4** (C/P) IS CUT OFF, STOPPING THE MOTOR SO THAT AUTO STOP OCCURS.

3. STOPPING OF AUTO DOWN AT DRIVER'S WINDOW

HEN THE MANUAL SW (DRIVER'S) IS PUSHED TO THE UP SIDE DURING AUTO DOWN OPERATION, A GROUND CIRCUIT OPENS IN THE MASTER SW AND CURRENT DOES NOT FLOW FROM **TERMINAL 6** (EX. C/P), **3** (C/P) OF THE MASTER SW → TO **GROUND**, SO THE MOTOR STOPS, CAUSING AUTO DOWN OPERATION TO STOP. IF THE MASTER SW IS PUSHED CONTINUOUSLY, THE MOTOR ROTATES IN THE UP DIRECTION IN MANUAL UP OPERATION.

4. MANUAL OPERATION BY POWER WINDOW SW (PASSENGER'S WINDOW)

WITH POWER WINDOW SW (PASSENGER'S) PULLED TO THE UP SIDE, CURRENT FLOWING FROM **TERMINAL 5** OF THE POWER WINDOW SW FLOWS TO **TERMINAL 1** OF THE POWER WINDOW SW → **TERMINAL 2** OF THE POWER WINDOW MOTOR → **TERMINAL 1** → **TERMINAL 4** OF THE POWER WINDOW SW → **TERMINAL 3** → **TERMINAL 5** (EX. C/P), **7** (C/P) OF THE MASTER SW → **TERMINAL 1** OR **2** (EX. C/P), 6 (C/P) → TO **GROUND** AND CAUSES THE POWER WINDOW MOTOR (PASSENGER'S) TO ROTATE IN THE UP DIRECTION. UP OPERATION CONTINUES ONLY WHILE THE POWER WINDOW SW IS PULLED TO THE UP SIDE. WHEN THE WINDOW DECENDS, THE CURRENT FLOWING TO THE MOTOR FLOWS IN THE OPPOSITE DIRECTION, FROM **TERMINAL 1** TO **TERMINAL 2**, AND THE MOTOR ROTATES IN REVERSE. WHEN THE WINDOW LOCK SW IS PUSHED TO THE LOCK SIDE, THE GROUND CIRCUIT TO THE PASSENGER'S WINDOW BECOMES OPEN. AS A RESULT, EVEN IF OPEN/CLOSE OPERATION OF THE PASSENGER'S WINDOW IS TRIED, THE CURRENT FROM **TERMINAL 1** OR **2** (EX. C/P), **6** (C/P) OF THE POWER WINDOW MASTER SW IS NOT GROUNDED AND THE MOTOR DOES NOT ROTATE, SO THE PASSENGER'S WINDOW CAN NOT BE OPERATED AND WINDOW LOCK OCCURS. FURTHERMORE REAR LH RH WINDOW OPERATE THE SAME AS THE ABOVE CIRCUIT.

5. KEY OFF POWER WINDOW OPERATION

WITH IGNITION SW TURNED FROM ON TO OFF DOOR LOCK CONTROL RELAY OPERATES AND CURRENT FLOWS FROM **POWER** FUSE TO **TERMINAL 8** OF THE RELAY → **TERMINAL 15** → **TERMINAL 1** OF POWER MAIN RELAY → **TERMINAL 2** → TO **GROUND** FOR ABOUT **60** SECOND. THE SAME AS NORMAL OPERATION, THE CURRENT FLOWS FROM **POWER** FUSE → **TERMINAL 5** OF THE POWER MAIN RELAY → **TERMINAL 3** → **TERMINAL 7** OR **8** (EX. C/P), **TERMINAL 9** (C/P) OF THE POWER WINDOW MASTER SW AND **TERMINAL 3** OF THE POWER MAIN RELAY → TO **TERMINAL 5** OF THE POWER WINDOW SW. AS A RESULT, FOR ABOUT **60** SECOND AFTER THE IGNITION SW IS TURNED OFF, THE FUNCTIONING OF THIS RELAY MAKES IT POSSIBLE TO RAISE AND LOWER THE POWER WINDOW. ALSO, BY OPENING THE FRONT DOOR (DOOR OPEN DETECTION SW ON) WITHIN ABOUT **60** SECOND AFTER TURNING THE IGNITION SW TO OFF, A SIGNAL IS INPUT TO DOOR LOCK CONTROL RELAY. AS A RESULT, THE RELAY TURNS OFF AND UP AND DOWN MOVEMENT OF THE POWER WINDOW STOPS.

SERVICE HINTS

P12 POWER WINDOW MASTER SW (C/P)

9–GROUND : APPROX. **12** VOLTS WITH IGNITION SW AT **ON** POSITION
6–GROUND : ALWAYS CONTINUITY
3–GROUND : APPROX. **12** VOLTS WITH IGNITION SW ON AND MASTER SW (DRIVER'S WINDOW) UP
4–GROUND : APPROX. **12** VOLTS WITH IGNITION SW ON AND MASTER SW (DRIVER'S WINDOW) AT **DOWN** OR **AUTO DOWN** POSITION

P12 POWER WINDOW MASTER SW (EX. C/P)

7, 8–GROUND : APPROX. **12** VOLTS WITH IGNITION SW AT **ON** POSITION
1, 2–GROUND : ALWAYS CONTINUITY
6–GROUND : APPROX. **12** VOLTS WITH IGNITION SW ON AND MASTER SW (DRIVER'S WINDOW) UP
13–GROUND : APPROX. **12** VOLTS WITH IGNITION SW ON AND MASTER SW (DRIVER'S WINDOW) AT **DOWN** OR **AUTO DOWN** POSITION

: PARTS LOCATION

CODE	SEE PAGE	CODE		SEE PAGE	CODE	SEE PAGE
D 8	32	**P10**		34 (S/D), 35 (C/P), 36 (W/G)	**P13**	34 (S/D), 35 (C/P), 36 (W/G)
J 2	33	**P11**		34 (S/D), 35 (C/P), 36 (W/G)	**P14**	34 (S/D), 35 (C/P), 36 (W/G)
J 3	33	**P12**	A	34 (S/D), 36 (W/G)	**P15**	34 (S/D), 35 (C/P), 36 (W/G)
P 9	34 (S/D), 35 (C/P), 36 (W/G)		B	35 (C/P)	**P16**	34 (S/D), 35 (C/P), 36 (W/G)

: JUNCTION BLOCK AND WIRE HARNESS CONNECTOR

CODE	SEE PAGE	JUNCTION BLOCK AND WIRE HARNESS (CONNECTOR LOCATION)
1K	20	COWL WIRE AND J/B NO. 1 (INSTRUMENT PANEL LEFT)
1L		
1M		

: CONNECTOR JOINING WIRE HARNESS AND WIRE HARNESS

CODE	SEE PAGE	JOINING WIRE HARNESS AND WIRE HARNESS (CONNECTOR LOCATION)
IG1	42	FLOOR NO. 1 WIRE AND INSTRUMENT PANEL WIRE
IH1	42	FRONT DOOR LH WIRE AND INSTRUMENT PANEL WIRE
IH2		
IT1	44	FRONT DOOR RH WIRE AND INSTRUMENT PANEL WIRE
IU1	44	FLOOR NO. 2 WIRE AND INSTRUMENT PANEL WIRE
BW1	46 (S/D)	REAR DOOR LH WIRE AND FLOOR NO. 1 WIRE
	50 (W/G)	
BY1	46 (S/D)	REAR DOOR RH WIRE AND FLOOR NO. 2 WIRE
	50 (W/G)	

: GROUND POINTS

CODE	SEE PAGE	GROUND POINTS LOCATION
IF	42	LEFT KICK PANEL
IG	42	INSTRUMENT PANEL BRACE LH

: SPLICE POINTS

CODE	SEE PAGE	WIRE HARNESS WITH SPLICE POINTS	CODE	SEE PAGE	WIRE HARNESS WITH SPLICE POINTS
I 3	44	INSTRUMENT PANEL WIRE	**B1**	46 (S/D)	FRONT DOOR LH WIRE
I24				50 (W/G)	

D 8 ORANGE

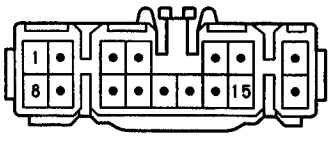

J 2

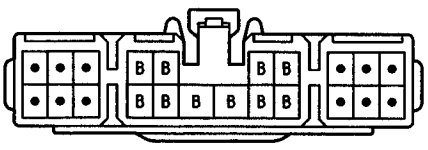

(HINT:SEE PAGE 7)

J 3

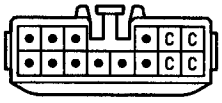

(HINT:SEE PAGE 7)

P 9, P10, P11



(*1) P12 (A)

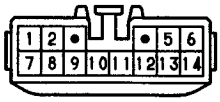

(*2) P12 (B)

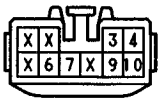

P13, P14 GRAY

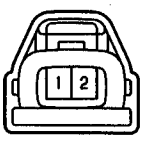

(S/D, W/G) P13, P14, P15, P16



DOOR LOCK

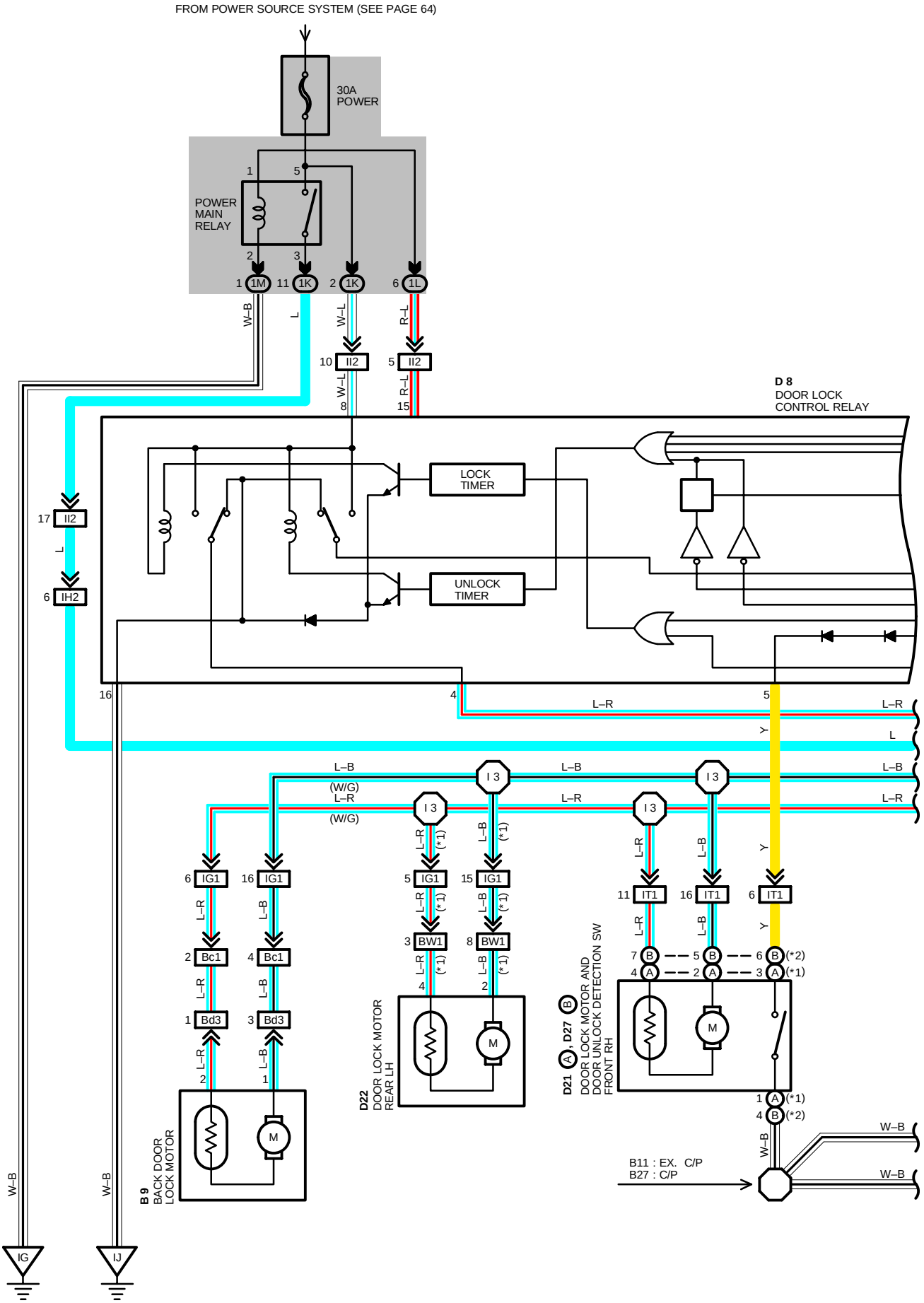
FROM POWER SOURCE SYSTEM (SEE PAGE 64)
30A POWER
POWER MAIN RELAY
1M
1K
1K
1L
II2
II2
D 8
DOOR LOCK CONTROL RELAY
LOCK TIMER
UNLOCK TIMER
IH2
II2
W–B
L
W–L
R–L
L–R
L–B
(W/G)
Y
I 3
IG1
IT1
Bc1
Bd3
BW1
(*1)
(*2)
B 9
BACK DOOR LOCK MOTOR
D22
DOOR LOCK MOTOR REAR LH
D21
D27
DOOR LOCK MOTOR AND DOOR UNLOCK DETECTION SW FRONT RH
B11 : EX. C/P
B27 : C/P
IG
IJ

*1 : S/D, W/G
*2 : C/P
*3 : W/ POWER WINDOW
*4 : W/ POWER WINDOW, C/P
*5 : W/O POWER WINDOW

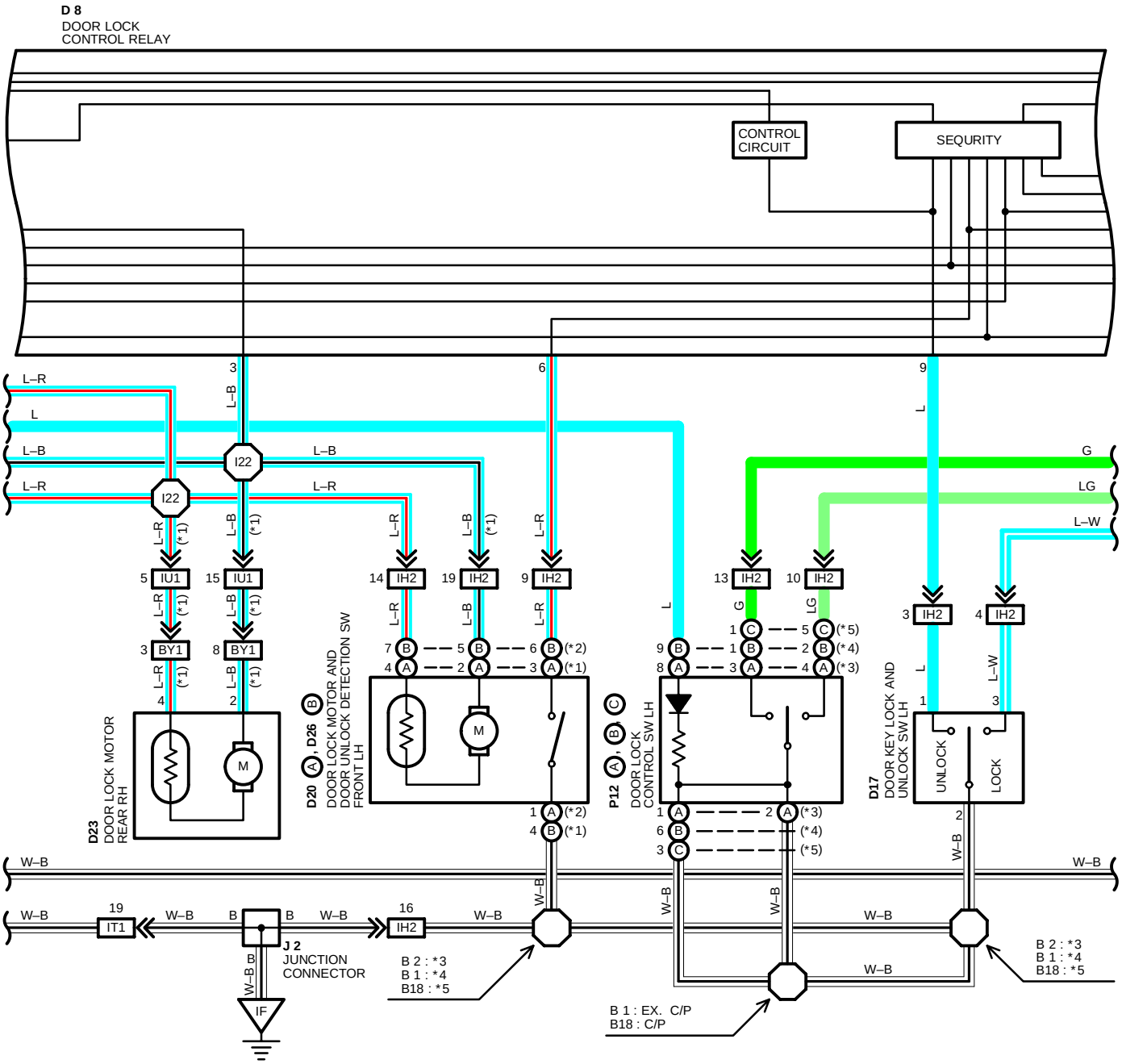

DOOR LOCK

*1 : W/ POWER WINDOW EX. C/P
*2 : W/O POWER WINDOW EX. C/P

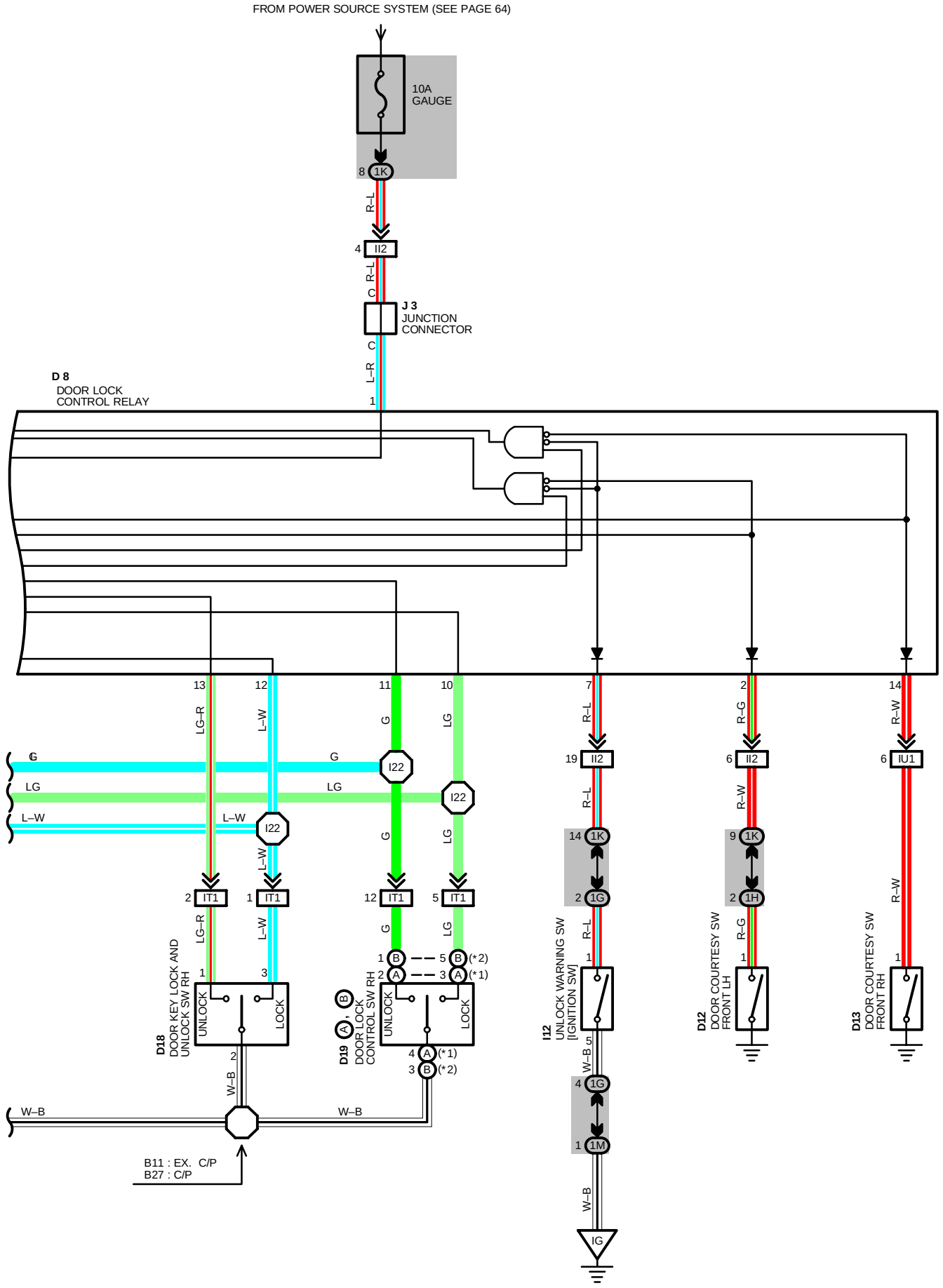

SYSTEM OUTLINE

CURRENT ALWAYS FLOWS TO **TERMINAL 8** OF THE DOOR LOCK CONTROL RELAY THROUGH THE **POWER** FUSE.

WHEN THE IGNITION SW IS TURNED ON, THE CURRENT FLOWING THROUGH THE **GAUGE** FUSE FLOWS THROUGH THE COIL SIDE OF THE POWER MAIN RELAY TO **GROUND**, CAUSING THE RELAY TO OPERATE. THE CURRENT FLOWING THROUGH THE **POWER** FUSE FLOWS TO THE LH DOOR LOCK CONTROL SW, CAUSING THE INDICATOR LIGHT TO LIGHT UP.

1. MANUAL LOCK OPERATION

WHEN THE DOOR LOCK CONTROL SW AND KEY SW ARE PUSHED TO **LOCK** POSITION, A LOCK SIGNAL IS INPUT TO **TERMINAL 10**, **12** OF THE DOOR LOCK CONTROL RELAY AND CAUSES THE RELAY TO FUNCTION. CURRENT FLOWS FROM **TERMINAL 8** OF THE RELAY → **TERMINAL 4** → **TERMINAL 4** OF THE DOOR LOCK MOTORS, (EX. C/P FRONT DOOR) OR **TERMINAL 7** (C/P FRONT DOOR), OF THE DOOR LOCK MOTOR **TERMINAL 2** OF THE BACK DOOR LOCK MOTOR → **TERMINAL 2** OF THE DOOR LOCK MOTORS, (EX. C/P FRONT DOOR) OR **TERMINAL 5** (C/P FRONT DOOR) OF THE DOOR LOCK MOTOR **TERMINAL 1** OF THE BACK DOOR LOCK MOTOR → **TERMINAL 3** OF THE RELAY → **TERMINAL 16** → TO **GROUND** AND THE DOOR LOCK MOTOR CAUSES THE DOOR TO LOCK.

2. MANUAL UNLOCK OPERATION

WHEN THE DOOR LOCK CONTROL SW AND KEY SW RH TO **UNLOCK** POSITION, AN UNLOCK SIGNAL IS INPUT TO **TERMINAL 11, 13** OF THE DOOR LOCK RELAY AND CAUSES THE RELAY TO FUNCTION. CURRENT FLOWS FROM **TERMINAL 8** OF THE RELAY → **TERMINAL 3** → **TERMINAL 2** OF THE DOOR LOCK MOTORS, (EX. C/P FRONT DOOR) OR **TERMINAL 5** (C/P FRONT DOOR) OF THE DOOR LOCK MOTOR **TERMINAL 1** OF THE BACK DOOR LOCK MOTOR → **TERMINAL 4** OF THE DOOR LOCK MOTORS, (EX. C/P FRONT DOOR) OR **TERMINAL 7** (C/P FRONT DOOR), OF THE DOOR LOCK MOTOR **TERMINAL 2** OF THE BACK DOOR LOCK MOTOR → **TERMINAL 4** OF THE RELAY → **TERMINAL 16** → TO **GROUND** AND DOOR LOCK MOTORS CAUSES DOOR TO UNLOCK.

3. DOUBLE OPERATION UNLOCK OPERATION

WHEN THE DOOR LOCK KEY SW (DRIVER'S) IS TURNED TO THE UNLOCK SIDE, ONLY THE DRIVER'S DOOR IS MECHANICALLY UNLOCKED. TURNING THE DOOR LOCK KEY SW (DRIVER'S) TO THE UNLOCK SIDE CAUSES A SIGNAL TO BE INPUT TO **TERMINAL 9** OF THE RELAY, AND IF THE SIGNAL IS INPUT AGAIN WITHIN **3** SECONDS BY TURNING THE SW TO THE UNLOCK SIDE AGAIN, CURRENT FLOWS **TERMINAL 3** → **TERMINAL 2** OF DOOR LOCK MOTORS, (EX. C/P FRONT DOOR) OR **TERMINAL 5** (C/P FRONT DOOR) OF THE DOOR LOCK MOTOR **TERMINAL 1** OF THE BACK DOOR LOCK MOTOR → **TERMINAL 4** OF THE DOOR LOCK MOTORS, (EX. C/P FRONT DOOR) OR **TERMINAL 7** (C/P FRONT DOOR), OF THE DOOR LOCK MOTOR **TERMINAL 2** OF THE BACK DOOR LOCK MOTOR → **TERMINAL 4** OF THE RELAY → **TERMINAL 16** → **GROUND**, CAUSING THE DOOR LOCK MOTORS TO OPERATE AND UNLOCK THE DOORS.

4. IGNITION KEY REMINDER OPERATION

***** OPERATING DOOR LOCK KNOB (OPERATION OF DOOR LOCK MOTORS)

WITH IGNITION KEY IN CYLINDER (UNLOCK WARNING SW ON), WHEN THE DOOR IS OPENED AND LOCKED USING DOOR LOCK KNOB (DOOR LOCK MOTOR), THE DOOR IS LOCKED ONCE BUT EACH DOOR IS UNLOCKED SOON BY THE FUNCTION OF RELAY. AS A RESULT, THE CURRENT FLOWS FROM **TERMINAL 8** OF THE RELAY → **TERMINAL 3** → **TERMINAL 2** OF THE DOOR LOCK MOTORS, (EX. C/P FRONT DOOR) OR **TERMINAL 5** (C/P FRONT DOOR) OF THE DOOR LOCK MOTOR **TERMINAL 2** OF THE BACK DOOR LOCK MOTOR → **TERMINAL 4** OF THE DOOR LOCK MOTORS, (EX. C/P FRONT DOOR) OR **TERMINAL 7** (C/P FRONT DOOR), OF THE DOOR LOCK MOTOR **TERMINAL 1** OF THE BACK DOOR LOCK MOTOR → **TERMINAL 4** OF THE RELAY → **TERMINAL 16** → TO **GROUND** AND CAUSES ALL THE DOORS TO UNLOCK.

***** OPERATING DOOR LOCK CONTROL SW OR DOOR LOCK KEY SW

WITH IGNITION KEY IN CYLINDER (UNLOCK WARNING SW ON), WHEN THE DOOR IS OPENED AND LOCKED USING DOOR LOCK CONTROL SW OR KEY SW, THE DOOR IS LOCKED ONCE BUT EACH DOOR IS UNLOCK BY THE FUNCTION OF SW CONTAINED IN MOTORS, WHICH THE SIGNAL IS INPUT TO **TERMINAL 6** (DRIVER'S) OR **5** (PASSENGER'S) OF THE RELAY. ACCORDING TO THIS INPUT SIGNAL, THE CURRENT IN ECU FLOWS FROM **TERMINAL 8** OF THE RELAY → **TERMINAL 3** → **TERMINAL 2** OF THE DOOR LOCK MOTORS, (EX. C/P FRONT DOOR) OR **TERMINAL 5** (C/P FRONT DOOR) OF THE DOOR LOCK MOTOR **TERMINAL 2** OF THE BACK DOOR LOCK MOTOR → **TERMINAL 4** OF THE DOOR LOCK MOTORS, **TERMINAL 1** OF THE BACK DOOR LOCK MOTOR → **TERMINAL 4** OF THE RELAY → **TERMINAL 16** → TO **GROUND** AND CAUSES ALL THE DOOR TO UNLOCK.

***** IN CASE OF KEY LESS LOCK

WITH IGNITION KEY IN CYLINDER (UNLOCK WARNING SW ON), WHEN THE UNLOCK FUNCTION IS DISTURBED MORE THAN **0.2** SECONDS, FOR EXAMPLE PUSHING THE DOOR LOCK KNOB ETC., THE DOOR HOLDS ON LOCK CONDITION. CLOSING THE DOOR AFTER, DOOR COURTESY SW INPUTS THE SIGNAL INTO **TERMINAL 2** OR **14** OF THE RELAY. BY THIS INPUT SIGNAL, THE ECU WORKS AND CURRENT FLOWS FROM **TERMINAL 8** OF THE RELAY → **TERMINAL 3** → **TERMINAL 2** OF THE DOOR LOCK MOTORS, (EX. C/P FRONT DOOR) OR **TERMINAL 5** (C/P FRONT DOOR) OF THE DOOR LOCK MOTOR **TERMINAL 1** OF THE BACK DOOR LOCK MOTOR → **TERMINAL 4** OF THE DOOR LOCK MOTORS, (EX. C/P FRONT DOOR) OR **TERMINAL 7** (C/P FRONT DOOR), OF THE DOOR LOCK MOTOR **TERMINAL 2** OF THE BACK DOOR LOCK MOTOR → **TERMINAL 4** OF THE RELAY → **TERMINAL 16** → TO **GROUND** AND CAUSES ALL THE DOORS TO UNLOCK.

DOOR LOCK

SERVICE HINTS

D8 DOOR LOCK CONTROL RELAY
16–GROUND : ALWAYS CONTINUITY
2–GROUND : CONTINUITY WITH DRIVER'S DOOR OPEN
8–GROUND : ALWAYS APPROX. **12** VOLTS
3–GROUND : APPROX. **12** VOLTS **0.2** SECONDS WITH FOLLOWING OPERATION
*DOOR LOCK CONTROL SW UNLOCKED
*DOOR LOCK CONTROL SW LOCKED WITH IGNITION KEY IN CYLINDER AND DRIVER'S DOOR OPEN (IGNITION KEY REMINDER FUNCTION)
*DOOR LOCK KNOB LOCKED WITH IGNITION KEY IN CYLINDER AND DRIVER'S DOOR OPEN (IGNITION KEY REMINDER FUNCTION)
*UNLOCKING THE DRIVER'S, PASSENGER'S DOOR CYLINDER WITH KEY
4–GROUND : APPROX. **12** VOLTS **0.2** SECONDS WITH FOLLOWING OPERATION
*DOOR LOCK CONTROL SW LOCKED
*LOCKING THE DRIVER'S, PASSENGER'S DOOR CYLINDER WITH KEY
10–GROUND : **0** VOLTS WITH DOOR LOCK CONTROL SW LOCKED
14–GROUND : CONTINUITY WITH PASSENGER'S DOOR OPEN
6–GROUND : CONTINUITY WITH DRIVER'S DOOR LOCK KNOB UNLOCKED
5–GROUND : CONTINUITY WITH PASSENGER'S DOOR LOCK KNOB UNLOCKED
11–GROUND : **0** VOLTS WITH DOOR LOCK CONTROL SW UNLOCKED, PASSENGER'S DOOR LOCK CYLINDER UNLOCKED WITH KEY
13–GROUND : **0** VOLTS WITH PASSENGER'S DOOR LOCK CYLINDER UNLOCKED WITH KEY
1–GROUND : APPROX. **12** VOLTS WITH IGNITION SW AT **ACC** POSITION
9–GROUND : **0** VOLTS WITH DRIVER'S DOOR LOCK CYLINDER UNLOCKED WITH KEY
12–GROUND : **0** VOLTS WITH DRIVER'S, PASSENGER'S DOOR LOCK CYLINDER LOCKED WITH KEY

D12, D13 DOOR COURTESY SW
1–GROUND : CLOSED WITH EACH DOOR OPEN

D17, D18 DOOR KEY LOCK AND UNLOCK SW
3–2 : CLOSED WITH DOOR LOCK CYLINDER LOCKED WITH KEY
1–2 : CLOSED WITH DOOR LOCK CYLINDER UNLOCKED WITH KEY

D20, D21 DOOR LOCK MOTOR AND DOOR UNLOCK DETECTION SW (C/P)
1–3 : CLOSED WITH **UNLOCK** POSITION

D20, D21 DOOR LOCK MOTOR AND DOOR UNLOCK DETECTION SW (EX. C/P)
6–4 : CLOSED WITH **UNLOCK** POSITION

I12 UNLOCK WARNING SW [IGNITION SW]
1–5 : CLOSED WITH IGNITION KEY IN CYLINDER

○ : PARTS LOCATION

CODE		SEE PAGE	CODE		SEE PAGE	CODE		SEE PAGE
B 9		36	**D19**	B	34 (S/D), 36 (W/G)	**J 2**		33
D 8		32	**D20**	A	34 (S/D), 36 (W/G)	**J 3**		33
D12		34 (S/D), 35 (C/P), 36 (W/G)		B	35 (C/P)	**P12**	A	34 (S/D), 36 (W/G)
D13		34 (S/D), 35 (C/P), 36 (W/G)	**D21**		34 (S/D), 35 (C/P), 36 (W/G)		B	34 (S/D), 35 (C/P), 36 (W/G)
D17		34 (S/D), 35 (C/P), 36 (W/G)	**D22**		34 (S/D), 35 (C/P), 36 (W/G)		C	35 (C/P)
D18		34 (S/D), 35 (C/P), 36 (W/G)	**D23**		34 (S/D), 35 (C/P), 36 (W/G)			
D19	A	34 (S/D), 36 (W/G)	**I12**		33			

⬭ : JUNCTION BLOCK AND WIRE HARNESS CONNECTOR

CODE	SEE PAGE	JUNCTION BLOCK AND WIRE HARNESS (CONNECTOR LOCATION)
1G	20	COWL WIRE AND J/B NO. 1 (INSTRUMENT PANEL LEFT)
1H	20	FLOOR NO. 1 WIRE J/B NO. 1 (INSTRUMENT PANEL LEFT)
1K	20	COWL WIRE AND J/B NO. 1 (INSTRUMENT PANEL LEFT)
1L		
1M		

▭ : CONNECTOR JOINING WIRE HARNESS AND WIRE HARNESS

CODE	SEE PAGE	JOINING WIRE HARNESS AND WIRE HARNESS (CONNECTOR LOCATION)
IG1	42	FLOOR NO. 1 WIRE AND INSTRUMENT PANEL WIRE
IH2	42	FRONT DOOR LH WIRE AND INSTRUMENT PANEL WIRE
II2	42	INSTRUMENT PANEL WIRE AND COWL WIRE
IT1	44	FRONT DOOR RH WIRE AND INSTRUMENT PANEL WIRE
IU1	44	FLOOR NO. 2 WIRE AND INSTRUMENT PANEL WIRE
BW1	46 (S/D) 50 (W/G)	REAR DOOR LH WIRE AND FLOOR NO. 1 WIRE
BY1	46 (S/D) 50 (W/G)	REAR DOOR RH WIRE AND FLOOR NO. 2 WIRE
Bc1	50 (W/G)	BACK DOOR NO. 1 WIRE AND FLOOR NO. 1 WIRE
Bd3	50 (W/G)	BACK DOOR NO. 1 WIRE AND BACK DOOR NO. 2 WIRE

: GROUND POINTS

CODE	SEE PAGE	GROUND POINTS LOCATION
IF	42	LEFT KICK PANEL
IG	42	INSTRUMENT PANEL BRACE LH
IJ	42	RIGHT KICK PANEL

: SPLICE POINTS

CODE	SEE PAGE	WIRE HARNESS WITH SPLICE POINTS	CODE	SEE PAGE	WIRE HARNESS WITH SPLICE POINTS
I 3	44	INSTRUMENT PANEL WIRE	**B 2**	50 (W/G)	FRONT DOOR LH WIRE
I22			**B11**	46 (S/D)	FRONT DOOR RH WIRE
B 1	46 (S/D)	FRONT DOOR LH WIRE		50 (W/G)	
	50 (W/G)		**B18**	48 (C/P)	FRONT DOOR LH WIRE
B 2	46 (S/D)		**B27**	48 (C/P)	FRONT DOOR RH WIRE

B 9 GRAY



D 8 ORANGE

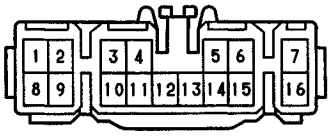

D12, D13



D17, D18 GRAY

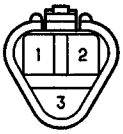

D19 (A)



D19 (B)



(S/D, W/G) D20 (A)



(C/P) D20 (B) GRAY

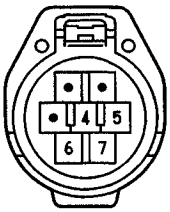

D21, D22, D23



I12

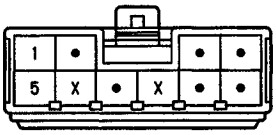

J 2

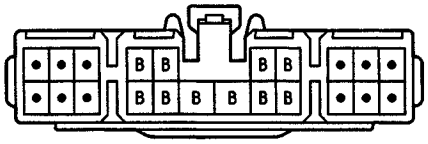

(HINT:SEE PAGE 7)

J 3

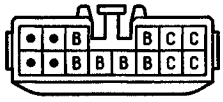

(HINT:SEE PAGE 7)

(S/D, W/G) P12 (A)

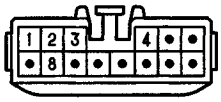

P12 (B)



(C/P) P12 (C)

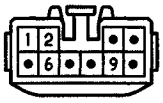

BACK DOOR LOCK (W/G w/o POWER WINDOW)

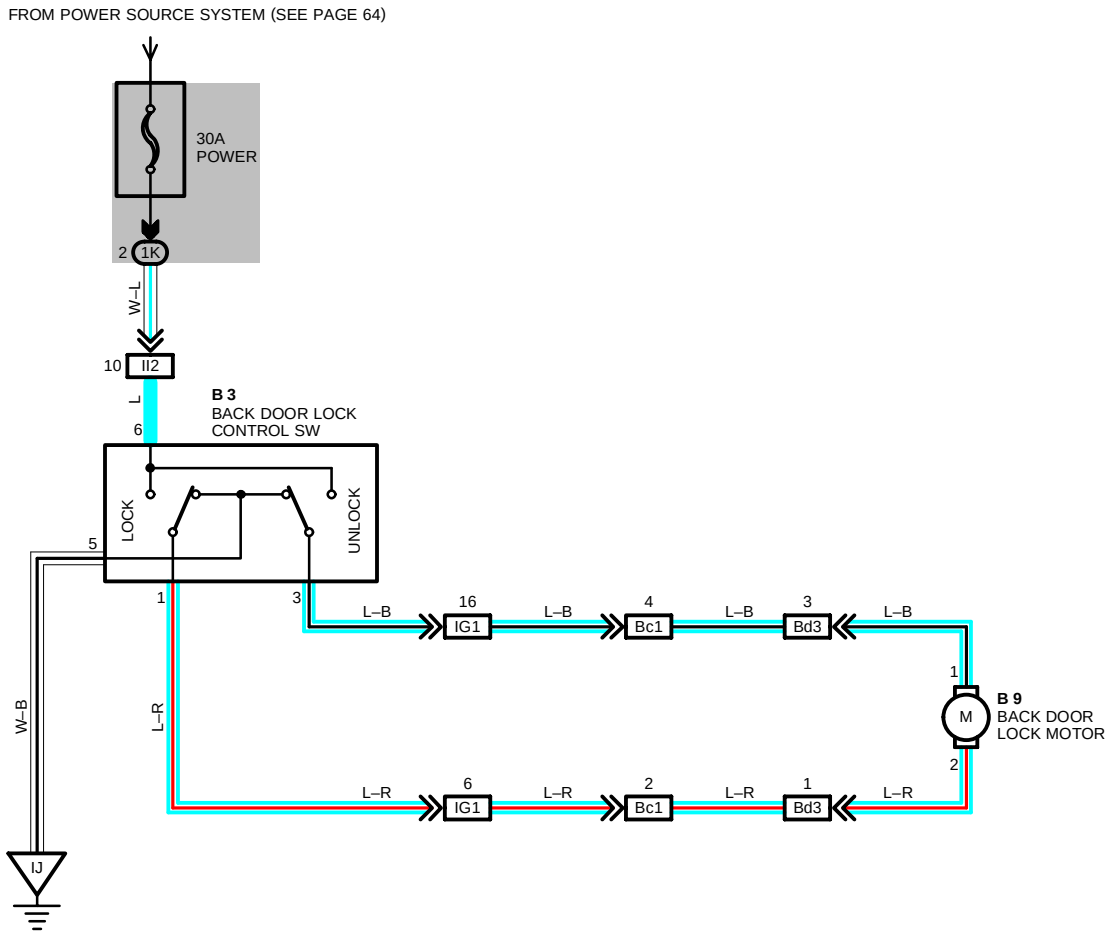

SERVICE HINTS

B 3 BACK DOOR LOCK CONTROL SW

6–GROUND : ALWAYS APPROX. **12** VOLTS

5–GROUND : ALWAYS CONTINUITY

○ : PARTS LOCATION

CODE	SEE PAGE	CODE	SEE PAGE	CODE	SEE PAGE
B 3	32	**B 9**	36 (W/G)		

⬭ : JUNCTION BLOCK AND WIRE HARNESS CONNECTOR

CODE	SEE PAGE	JUNCTION BLOCK AND WIRE HARNESS (CONNECTOR LOCATION)
IK	20	COWL WIRE AND J/B NO. 1 (INSTRUMENT PANEL LEFT)

▭ : CONNECTOR JOINING WIRE HARNESS AND WIRE HARNESS

CODE	SEE PAGE	JOINING WIRE HARNESS AND WIRE HARNESS (CONNECTOR LOCATION)
IG1	38	FLOOR NO. 1 WIRE AND INSTRUMENT PANEL WIRE (LEFT KICK PANEL)
IT2	40	FRONT DOOR RH WIRE AND INSTRUMENT PANEL WIRE (RIGHT KICK PANEL)
Bc1	44 (W/G)	BACK DOOR NO. 1 WIRE AND FLOOR NO. 1 WIRE (LEFT QUARTER TRIM INNER)
Bd3	44 (W/G)	BACK DOOR NO. 1 WIRE AND BACK DOOR NO. 2 WIRE (BACK DOOR LEFT)

▽ : GROUND POINTS

CODE	SEE PAGE	GROUND POINTS LOCATION
IJ	38	RIGHT KICK PANEL

B 3



B 9 GRAY



SERVICE HINTS

POWER MAIN RELAY

5–3 : CLOSED WITH IGNITION SW AT **ON** POSITION

M 2 MOON ROOF CONTROL RELAY

11–GROUND : ALWAYS CONTINUITY
6–GROUND : APPROX. **12** VOLTS WITH IGNITION SW AT **ON** POSITION
4–GROUND : APPROX. **12** VOLTS WITH IGNITION SW ON, AND MOON ROOF CONTROL SW AT **CLOSE** OR **UP** POSITION (EXCEPT APPROX. **100** MM (**3.941** IN.) IN THE BEFORE **CLOSED** POSITION)
5–GROUND : APPROX. **12** VOLTS WITH IGNITION SW ON, AND MOON ROOF CONTROL SW AT **OPEN** OR **DOWN** POSITION
12–GROUND : ALWAYS APPROX. **12** VOLTS

M 3 MOON ROOF CONTROL SW

5–4 : CLOSED WITH MOON ROOF CONTROL SW AT **UP** POSITION
6–4 : CLOSED WITH MOON ROOF CONTROL SW AT **CLOSE** POSITION
2–4 : CLOSED WITH MOON ROOF CONTROL SW AT **DOWN** POSITION
3–4 : CLOSED WITH MOON ROOF CONTROL SW AT **OPEN** POSITION
4–GROUND : ALWAYS CONTINUITY

: PARTS LOCATION

CODE	SEE PAGE	CODE	SEE PAGE	CODE	SEE PAGE
D 8	32	**M 2**	34 (S/D), 35 (C/P), 36 (W/G)	**M 4**	34 (S/D), 35 (C/P), 36 (W/G)
J 3	33	**M 3**	34 (S/D), 35 (C/P), 36 (W/G)	**M 5**	34 (S/D), 35 (C/P), 36 (W/G)

: JUNCTION BLOCK AND WIRE HARNESS CONNECTOR

CODE	SEE PAGE	JUNCTION BLOCK AND WIRE HARNESS (CONNECTOR LOCATION)
1C	20	COWL WIRE AND J/B NO. 1 (INSTRUMENT PANEL LEFT)
1I	20	ROOF WIRE AND J/B NO. 1 (INSTRUMENT PANEL) TMC MADE
	20	COWL WIRE AND J/B NO. 1 (INSTRUMENT PANEL) TMM MADE
1K	20	COWL WIRE AND J/B NO. 1 (INSTRUMENT PANEL LEFT)
1L		
1M		
2E	22	ENGINE ROOM MAIN WIRE AND J/B NO. 2 (ENGINE COMPARTMENT LEFT)
2G	22	COWL WIRE AND J/B NO. 2 (ENGINE COMPARTMENT LEFT)

: CONNECTOR JOINING WIRE HARNESS AND WIRE HARNESS

CODE	SEE PAGE	JOINING WIRE HARNESS AND WIRE HARNESS (CONNECTOR LOCATION)
II2	42	INSTRUMENT PANEL WIRE AND COWL WIRE
IV1	44	ROOF WIRE AND COWL WIRE

: GROUND POINTS

CODE	SEE PAGE	GROUND POINTS LOCATION
IG	42	INSTRUMENT PANEL BRACE LH
BK	46 (S/D)	ROOF LEFT
	48 (C/P)	
BP	50 (W/G)	BACK PANEL CENTER

: SPLICE POINTS

CODE	SEE PAGE	WIRE HARNESS WITH SPLICE POINTS	CODE	SEE PAGE	WIRE HARNESS WITH SPLICE POINTS
B 4	46 (S/D)	ROOF WIRE	**B31**	50 (W/G)	ROOF WIRE
B 5			**B32**		
B21	48 (C/P)				

D 8

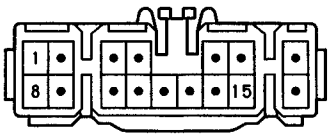

J 3

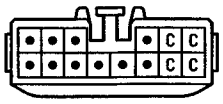

(HINT:SEE PAGE 7)

M 2

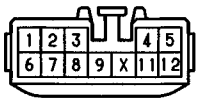

M 3



M 4

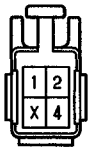

M 5

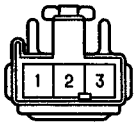

MOON ROOF

*1 : S/D TMC MADE
*2 : S/D TMM MADE, W/G

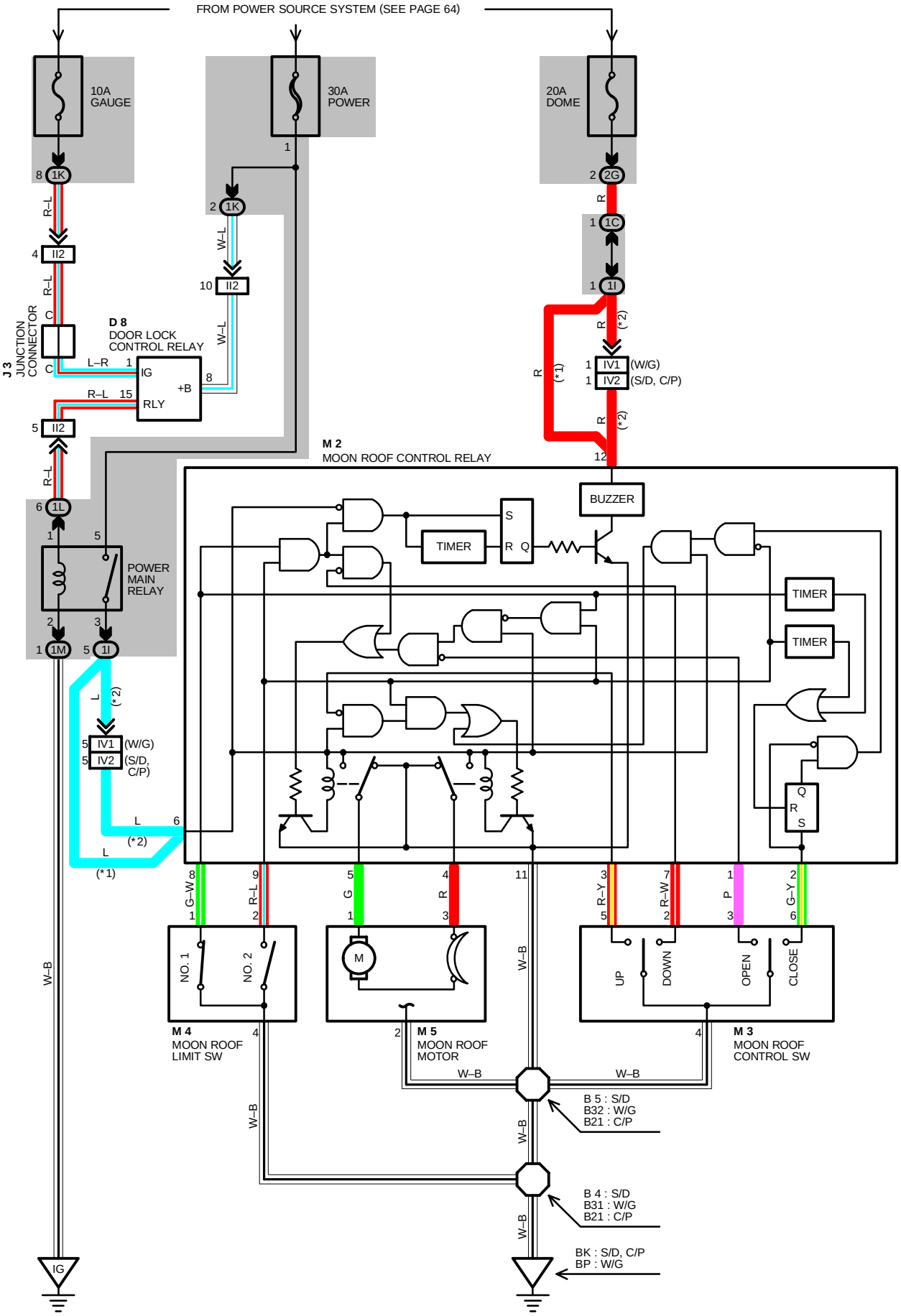

SYSTEM OUTLINE

CURRENT IS APPLIED AT ALL TIMES THROUGH **POWER** FUSE TO **TERMINAL 5** OF POWER MAIN RELAY AND ALSO THROUGH **DOME** FUSE TO **TERMINAL 12** OF MOON ROOF CONTROL RELAY.

WITH THE IGNITION SW TURNED ON, THE CURRENT FLOWS FROM **TERMINAL 1** OF POWER MAIN RELAY → **TERMINAL 2** → TO **GROUND** THROUGH **GAUGE** FUSE. AS A RESULT, POWER MAIN RELAY IS ACTIVATED AND THE CURRENT TO **TERMINAL 5** OF POWER MAIN RELAY FLOWS FROM **TERMINAL 3** OF RELAY TO **TERMINAL 6** OF MOON ROOF CONTROL RELAY.

1. SLIDE OPEN OPERATION

WHEN THE IGNITION SW IS TURNED ON AND THE MOON ROOF CONTROL SW IS PUSHED TO THE **OPEN** POSITION, A SIGNAL IS INPUT FROM **TERMINAL 3** OF MOON ROOF CONTROL SW TO **TERMINAL 1** OF MOON ROOF CONTROL RELAY. MOON ROOF LIMIT SW NO. 2 ON AT THIS TIME.

WHEN THIS OCCURS, THE RELAY IS ACTIVATED AND THE CURRENT TO **TERMINAL 6** OF MOON ROOF CONTROL RELAY FLOWS FROM **TERMINAL 5** → **TERMINAL 1** OF MOON ROOF MOTOR → **TERMINAL 3** → **TERMINAL 4** OF MOON ROOF CONTROL RELAY → **TERMINAL 11** → TO **GROUND** AND ROTATES THE MOTOR TO OPEN THE MOON ROOF WHILE THE SW IS BEING PUSHED TO **OPEN** POSITION.

2. SLIDE CLOSE OPERATION

WITH THE IGNITION SW TURNED ON, THE MOON ROOF COMPLETELY OPEN AND MOON ROOF LIMIT SW NO. 1 AND NO. 2 BOTH ON, WHEN THE MOON ROOF CONTROL SW IS PUSHED TO THE **CLOSE** POSITION A SIGNAL IS INPUT FROM **TERMINAL 6** OF MOON ROOF CONTROL SW TO **TERMINAL 2** OF MOON ROOF CONTROL RELAY.

WHEN THIS OCCURS, THE RELAY IS ACTIVATED AND THE CURRENT TO **TERMINAL 6** OF MOON ROOF CONTROL RELAY FLOWS FROM **TERMINAL 4** → **TERMINAL 3** OF MOON ROOF MOTOR → **TERMINAL 1** → **TERMINAL 5** OF MOON ROOF CONTROL RELAY → **TERMINAL 11** → TO **GROUND** AND ROTATES THE MOTOR TO CLOSE THE MOON ROOF WHILE THE SW IS BEING PUSHED TO **CLOSE** POSITION.

MOON ROOF LIMIT SW NO. 1 TURNS OFF (LIMIT SW NO. 2 IS ON) AND A **100** MM BEFORE FULLY **CLOSE** POSITION, SIGNAL IS INPUT FROM **TERMINAL 1** OF LIMIT SW NO. 1 TO **TERMINAL 8** OF MOON ROOF CONTROL RELAY. THIS SIGNAL ACTIVATES THE RELAY AND STOPS CONTINUITY FROM **TERMINAL 6** OF MOON ROOF CONTROL RELAY TO **TERMINAL 11**. AS A RESULT, THE MOON ROOF STOPS AT THIS POSITION.

TO CLOSE THE MOON ROOF COMPLETELY, PUSHING THE MOON ROOF CONTROL SW AGAIN TO THE CLOSE SIDE CAUSES A SIGNAL TO BE INPUT AGAIN TO **TERMINAL 2** OF MOON ROOF CONTROL RELAY. THIS ACTIVATES THE RELAY AND THE MOON ROOF WILL CLOSE AS LONG AS THE MOON ROOF CONTROL SW IS BEING PUSHED, ALLOWING THE MOON ROOF TO FULLY CLOSE.

3. TILT UP OPERATION

WHEN THE MOON ROOF CONTROL SW IS PUSHED TO **TILT UP** POSITION, WITH THE IGNITION SW TURNED ON AND THE MOON ROOF COMPLETELY CLOSED (MOON ROOF LIMIT SW NO. 2 IS OFF), A SIGNAL IS INPUT FROM **TERMINAL 5** OF MOON ROOF CONTROL SW TO **TERMINAL 3** OF MOON ROOF CONTROL RELAY. AS A RESULT, THE RELAY IS ACTIVATED AND THE CURRENT TO **TERMINAL 6** OF RELAY FLOWS FROM **TERMINAL 4** OF RELAY → **TERMINAL 3** OF MOON ROOF MOTOR → **TERMINAL 1** → **TERMINAL 5** OF RELAY → **TERMINAL 11** TO **GROUND** AND ROTATES THE MOTOR SO THAT TILT UP OPERATION OCCURS AS LONG AS THE MOON ROOF CONTROL SW IS PUSHED ON THE TILT UP SIDE.

4. TILT DOWN OPERATION

WHEN THE MOON ROOF CONTROL SW IS PUSHED TO **TILT DOWN** POSITION, WITH THE IGNITION SW TURNED ON AND THE MOON ROOF TILTED UP (NO. 1 AND NO. 2 MOON ROOF LIMIT SWITCHES ARE BOTH OFF), A SIGNAL IS INPUT FROM **TERMINAL 2** OF MOON ROOF CONTROL SW TO **TERMINAL 7** OF MOON ROOF CONTROL RELAY.

AS A RESULT, THE RELAY IS ACTIVATED AND THE CURRENT TO **TERMINAL 6** OF RELAY FLOWS FROM **TERMINAL 5** OF RELAY → **TERMINAL 1** OF MOON ROOF MOTOR → **TERMINAL 3** → **TERMINAL 4** OF RELAY → **TERMINAL 11** → TO **GROUND** AND ROTATES THE MOTOR SO THAT TILT DOWN OPERATION OCCURS AS LONG AS THE MOON ROOF CONTROL SW IS PUSHED ON THE TILT DOWN SIDE. (DURING TILT DOWN, LIMIT SW NO. 1 IS CHANGED OFF TO ON.)

5. TILT UP REMINDER SYSTEM

WHEN THE IGNITION SW IS TURNED FROM ON TO ACC OR OFF WITH THE MOON ROOF STILL TILTED UP THE CURRENT DOES NOT FLOW TO **TERMINAL 6** OF MOON ROOF CONTROL RELAY.

THIS IS RECEIVED BY THE RELAY AS A SIGNAL THAT THE IGNITION SW IS TURNED OFF. AT THIS TIME, MOON ROOF LIMIT SW NO.1 AND NO. 2 ARE OFF, SO SIGNALS ARE INPUT TO **TERMINALS 8** AND **9** OF MOON ROOF CONTROL RELAY THAT THE MOON ROOF IS IN THE TILT OPERATION POSITION. WHEN THESE SIGNALS ARE INPUT TO THE MOON ROOF CONTROL RELAY, THE TIMER BUILT INTO THE RELAY OPERATES.

THUS THE CURRENT TO **TERMINAL 12** OF MOON ROOF CONTROL RELAY FLOWS THROUGH BUZZER OF MOON ROOF CONTROL RELAY AND **TERMINAL 11** OF MOON ROOF CONTROL RELAY TO **GROUND** AND THE BUZZER SOUNDS ABOUT **8** TIMES TO NOTIFY THAT THE MOON ROOF IS STILL IN THE TILT UP CONDITION.

UNLOCK AND SEAT BELT WARNING

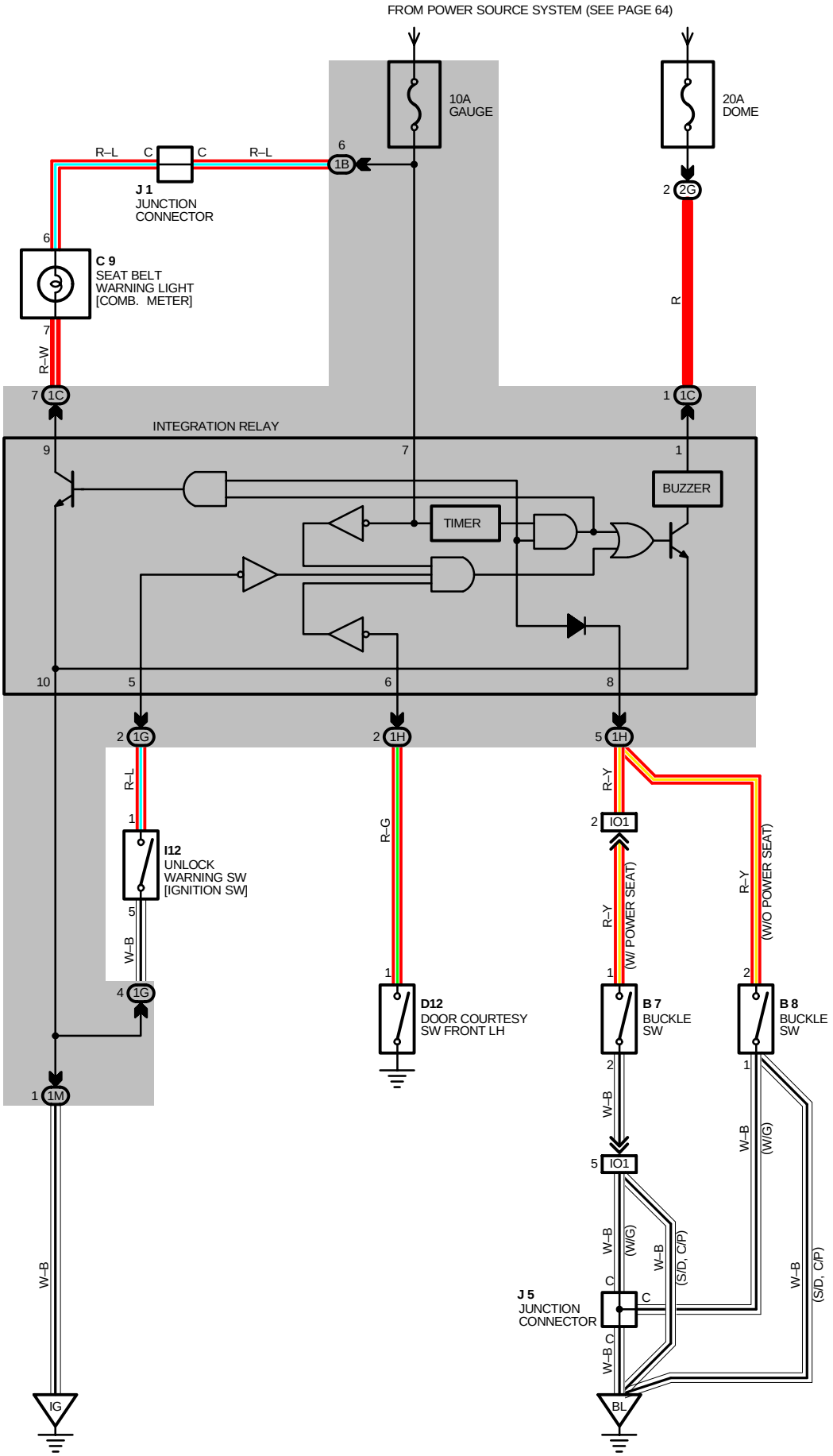

SYSTEM OUTLINE

CURRENT ALWAYS FLOWS TO **TERMINAL 1** OF THE INTEGRATION RELAY THROUGH THE **DOME** FUSE.

1. SEAT BELT WARNING SYSTEM

WHEN THE IGNITION SW IS TURNED ON, CURRENT FLOWS FROM THE **GAUGE** FUSE TO THE **TERMINAL 7** OF THE INTEGRATION RELAY AT THE SAME TIME, CURRENT FLOWS TO **TERMINAL 9** OF THE RELAY FROM THE **GAUGE** FUSE THROUGH THE SEAT BELT WARNING LIGHT. THIS CURRENT ACTIVATES THE SEAT BELT WARNING RELAY AND, CURRENT FLOWING THROUGH THE WARNING LIGHT FLOWS FROM **TERMINAL 9** OF THE RELAY→ **TERMINAL 10** → **GROUND**, CAUSING THE WARNING LIGHT TO LIGHT UP. AT THE SAME AS THE WARNING LIGHT LIGHTS UP. A BUCKLE SW OFF SIGNAL IS INPUT TO **TERMINAL 8** OF THE RELAY, THE CURRENT FLOWING TO **TERMINAL 1** OF THE RELAY FLOWS FROM **TERMINAL 10** → **GROUND** AND THE SEAT BELT WARNING BUZZER SOUNDS FOR APPROX. **4–8** SECONDS. HOWEVER, IF SEAT BELT IS PUT ON DURING THIS PERIOD (WHILE THE BUZZER IS SOUNDING), SIGNAL INPUT TO **TERMINAL 8** OF THE RELAY STOPS AND THE CURRENT FLOW FROM **TERMINAL 1** OF THE RELAY → **TERMINAL 10** → **GROUND** IS CUT, CAUSING THE BUZZER TO STOP.

2. UNLOCK WARNING SYSTEM

WITH THE IGNITION KEY INSERTED IN THE KEY CYLINDER (UNLOCK WARNING SW ON), THE IGNITION SW STILL OFF AND DOOR OPEN (DOOR COURTESY SW ON), WHEN A SIGNAL IS INPUT **TERMINAL 5** AND **6** OF THE RELAY, THE INTEGRATION RELAY OPERATES, CURRENT FLOWS FROM **TERMINAL 1** OF THE RELAY → **TERMINAL 10** → **GROUND** AND THE UNLOCK WARNING BUZZER SOUNDS.

SERVICE HINTS

B 7, B 8 BUCKLE SW

1–2 : CLOSED WITH DRIVR'S LAP BELT IN USE

D12 DOOR COURTESY SW FRONT LH

1–GROUND : CLOSED WITH FRONT LH DOOR OPEN

INTEGRATION RELAY

10–GROUND : ALWAYS CONTINUITY
6–GROUND : CONTINUITY WITH FRONT LH DOOR OPEN
5–GROUND : CONTINUITY WITH IGNITION KEY IN CYLINDER
8–GROUND : CONTINUITY UNLESS DRIVER'S LAP BELT IN USE
9–GROUND : **0** VOLTS WITH IGNITION SW ON AND BUCKLE SW OFF
1–GROUND : ALWAYS APPROX. **12** VOLTS
7–GROUND : APPROX. **12** VOLTS WITH IGNITION SW AT **ON** POSITION

I12 UNLOCK WARNING SW [IGNITION SW]

1–5 : CLOSED WITH IGNITION KEY IN CYLINDER

: PARTS LOCATION

CODE	SEE PAGE	CODE	SEE PAGE	CODE	SEE PAGE
B 7	32	**D12**	34 (S/D), 35 (C/P), 36 (W/G)	**J 5**	36 (W/G)
B 8	32	**I12**	33		
C 9	32	**J 1**	33		

: JUNCTION BLOCK AND WIRE HARNESS CONNECTOR

CODE	SEE PAGE	JUNCTION BLOCK AND WIRE HARNESS (CONNECTOR LOCATION)
1B	20	COWL WIRE AND J/B NO. 1 (INSTRUMENT PANEL LEFT)
1C		
1G		
1H	20	FLOOR NO. 1 WIRE J/B NO. 1 (INSTRUMENT PANEL LEFT)
1M	20	COWL WIRE AND J/B NO. 1 (INSTRUMENT PANEL LEFT)
2E	22	ENGINE ROOM MAIN WIRE AND J/B NO. 2 (ENGINE COMPARTMENT LEFT)

: CONNECTOR JOINING WIRE HARNESS AND WIRE HARNESS

CODE	SEE PAGE	JOINING WIRE HARNESS AND WIRE HARNESS (CONNECTOR LOCATION)
IO1	42	FLOOR NO. 1 WIRE AND SEAT WIRE

: GROUND POINTS

CODE	SEE PAGE	GROUND POINTS LOCATION
IG	42	INSTRUMENT PANEL BRACE LH
BL	46 (S/D)	UNDER THE LEFT QUARTER PILLAR
	48 (C/P)	
	50 (W/G)	

B 7

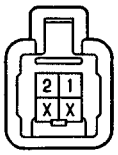

B 8



C 9

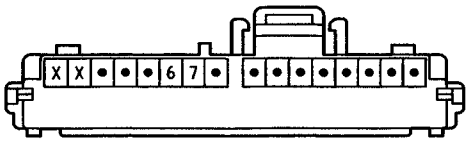

D12



I12

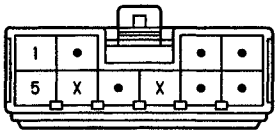

J 1 DARK GRAY

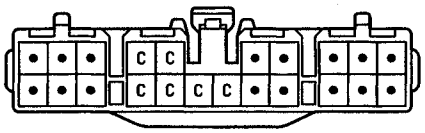

(HINT:SEE PAGE 7)

J 5

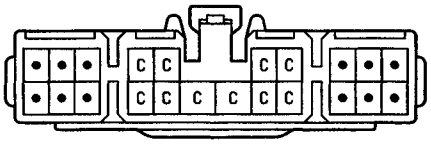

(HINT:SEE PAGE 7)

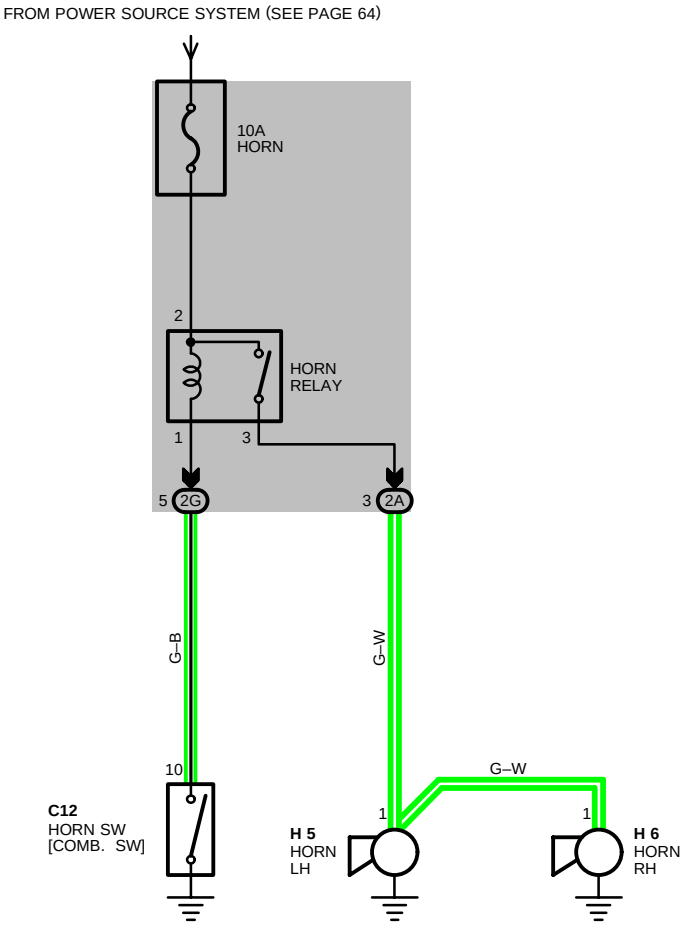

SERVICE HINTS

HORN RELAY
2–3 : CLOSED WITH HORN SW ON

○ : PARTS LOCATION

CODE	SEE PAGE	CODE	SEE PAGE	CODE	SEE PAGE
C12	32	**H 5**	28 (1MZ–FE), 30 (5S–FE)	**H 6**	28 (1MZ–FE), 30 (5S–FE)

▭ : CONNECTOR JOINING WIRE HARNESS AND WIRE HARNESS

CODE	SEE PAGE	JOINING WIRE HARNESS AND WIRE HARNESS (CONNECTOR LOCATION)
2A	22	ENGINE ROOM MAIN WIRE AND J/B NO. 2 (ENGINE COMPARTMENT LEFT)
2E		

C12 BLACK

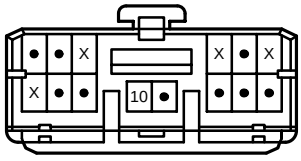

H 5, H 6 BLACK

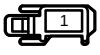

SRS (SUPPLEMENTAL RESTRAINT SYSTEM)

NOTICE: When inspecting or repairing the SRS (supplemental restraint system), perform the operation in accordance with the following precautionary instructions and the procedure and precautions in the Repair Manual for the applicable model year.

- Malfunction symptoms of the supplemental restraint system are difficult to confirm, so the diagnostic trouble codes become the most important source of information when troubleshooting.

  When troubleshooting the supplemental restraint system, always inspect the diagnostic trouble codes before disconnecting the battery.

- Work must be started after 90 seconds from the time the Ignition SW is set to the “LOCK” position and the negative (–) terminal cable is disconnected from the battery.

  (The supplemental restraint system is equipped with a back–up power source so that if work is started within 90 seconds of disconnecting the negative (–) terminal cable of the battery, the SRS may be activated.)

  When the negative (–) terminal cable is disconnected from the battery, memory of the clock and audio systems will be cancelled. So before starting work, make a record of the contents momorized by each memory system. When work is finished, reset the clock and audio system as before and adjust the clock. This vehicle has tilt and telescopic steering, power seat and outside rear view mirror and power shoulder belt anchorage, which are all equipped with memory function, it is not possible to make a record of the customer, and ask the customer to adjust the features and reset the memory.

  To avoid erasing the memory of each memory system, never use a back–up power supply from outside the vehicle.

- When removing the steering wheel pad or handling a new steering wheel pad, keep the pad upper surface facing upward. Also, lock the lock lever of the twin lock type connector at the rear of the pad and take care not to damage the connector.

  (Storing the pad with its metallic surface up may lead to a serious accident if the SRS inflates for some reason.)

- Store the steering wheel pad where the ambient temperature remains below 93˚C (200˚F), without high humidity and away from electrical noise.

- Never use SRS parts from another vehicle. When replacing SRS parts, replace them with new parts.

- Never disassemble and repair the steering wheel pad, center SRS sensor assembly or front airbag sensors.

- Before repairing the body, remove the airbag sensors if during repair shocks are likely to be applied to the sensors due to vibration of the body or direct tapping with tools or other parts.

- Do not reuse a steering wheel pad or front airbag sensors.

  After evaluating whether the center airbag sensor assembly is damaged or not, decide whether or not to reuse it. (See the Repair Manual for the method for evaluating the center airbag sensor assembly.)

- When troubleshooting the supplemental restraint system, use a high–impedance (Min. 10k /V) tester.

- The wire harness of the supplemental restraint system is integrated with the cowl wire harness assembly and engine wire harness assembly.

  The vehicle wiring harness exclusively for the airbag system is distinguished by corrugated yellow tubing, as are the connectors.

- Do not measure the resistance of the airbag squib.

  (It is possible this will deploy the airbag and is very dangerous.)

- If the wire harness used in the supplemental restraint system is damaged, replace the whole wire harness assembly.

  When the connector to the airbag front sensors can be repaired alone (when there is no damage to the wire harness), use the repair wire specially designed for the purpose.

  (Refer to the Repair Manual for the applicable Model year for details of the replacement method.)

- INFORMATION LABELS (NOTICES) are attached to the periphery of the SRS components. Follow the instructions on the notices.

The supplemental restraint system has connectors which possess the functions described below:

1. SRS ACTIVATION PREVENTION MECHANISM

   Each connector contains a short spring plate. When the connector is disconnected, the short spring plate automatically connects the power source and grounding terminals of the squib to preclude a potential difference between the terminals.

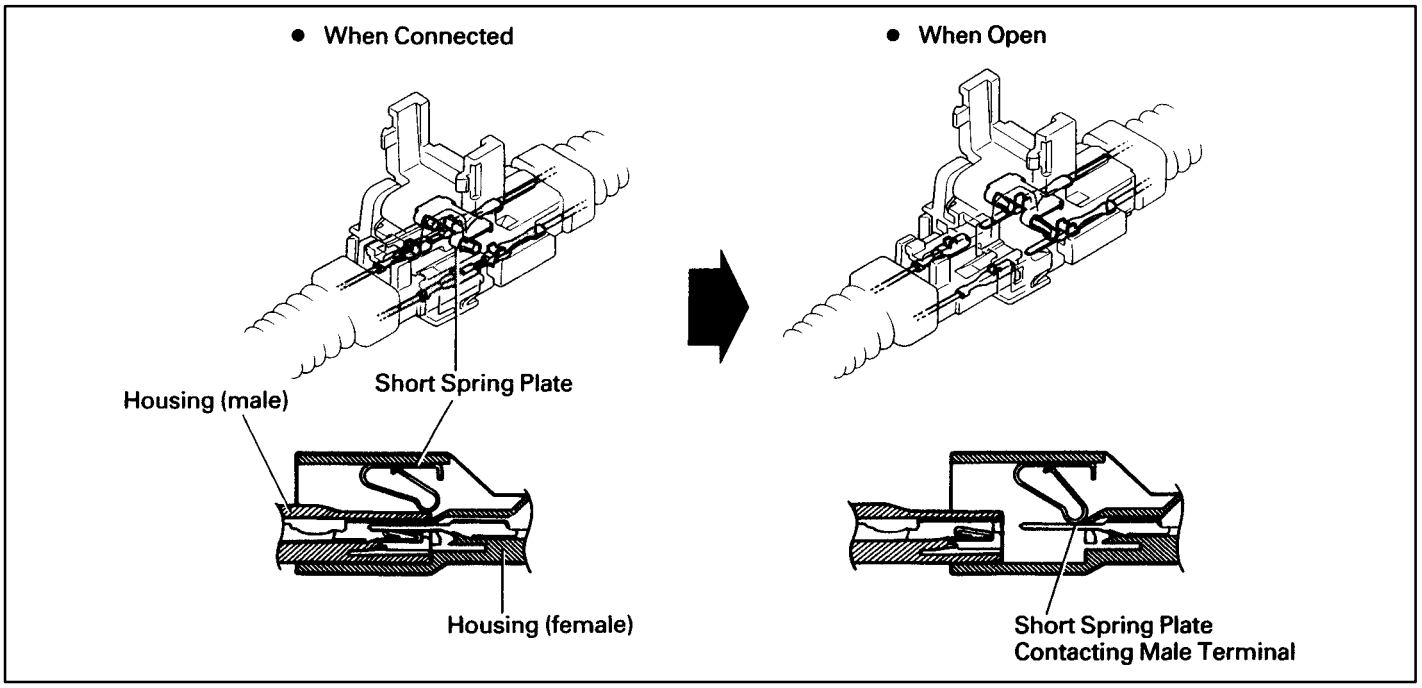

2. ELECTRICAL CONNECTION CHECK MECHANISM

   This mechanism is designed to electrically check if connectors are connected correctly and completely.

   The electrical connection check mechanism is designed so that the connection detection pin connects with the diagnosis terminals when the connector housing lock is in the locked condition.

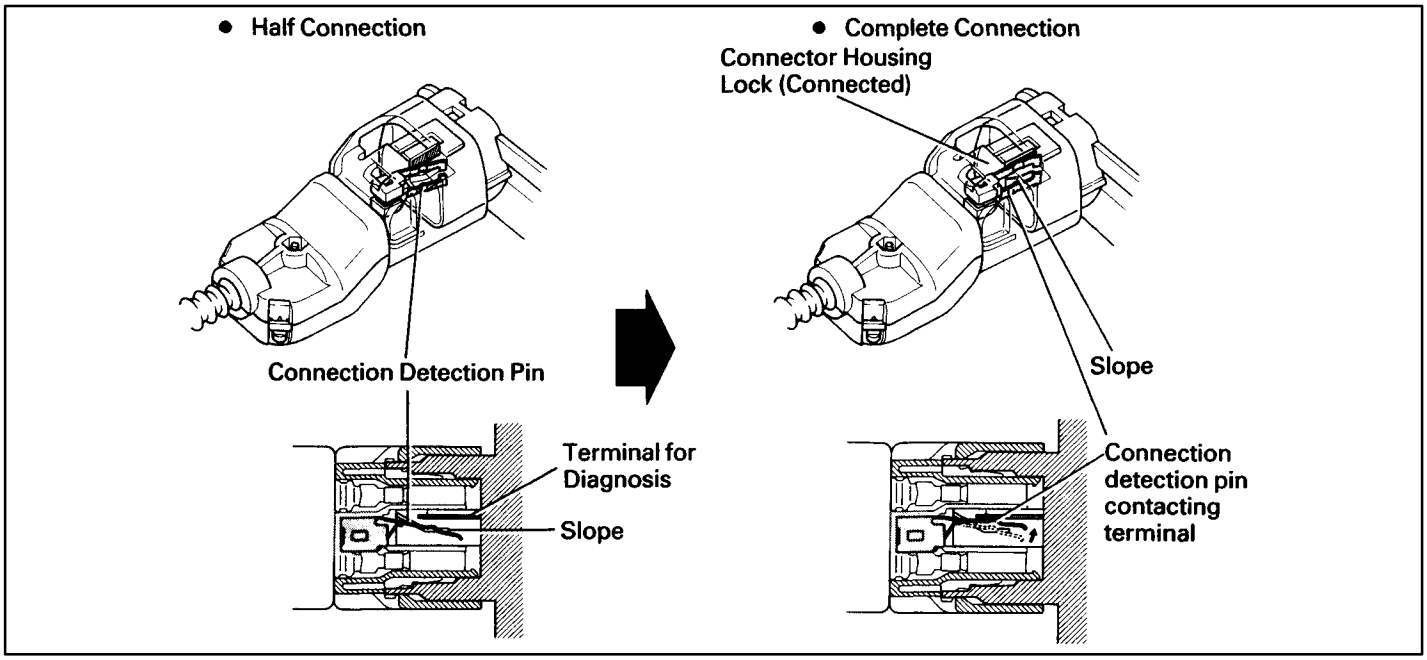

3. CONNECTOR TWIN–LOCK MECHANISM

With this mechanism connectors (male and female connectors) are locked by two locking devices to increase connection reliability. If the primary lock is incomplete, ribs interfere and prevent the secondary lock.

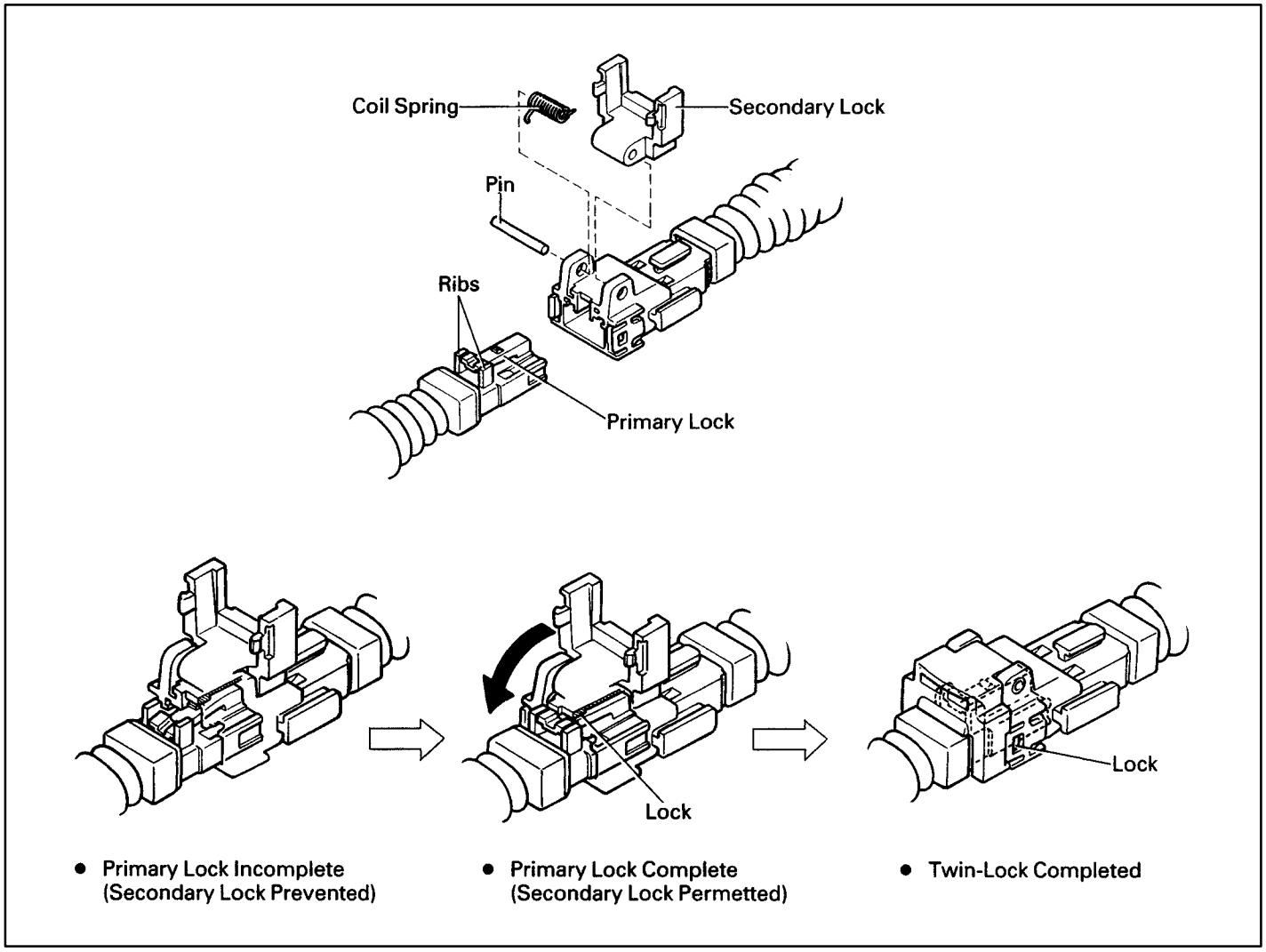

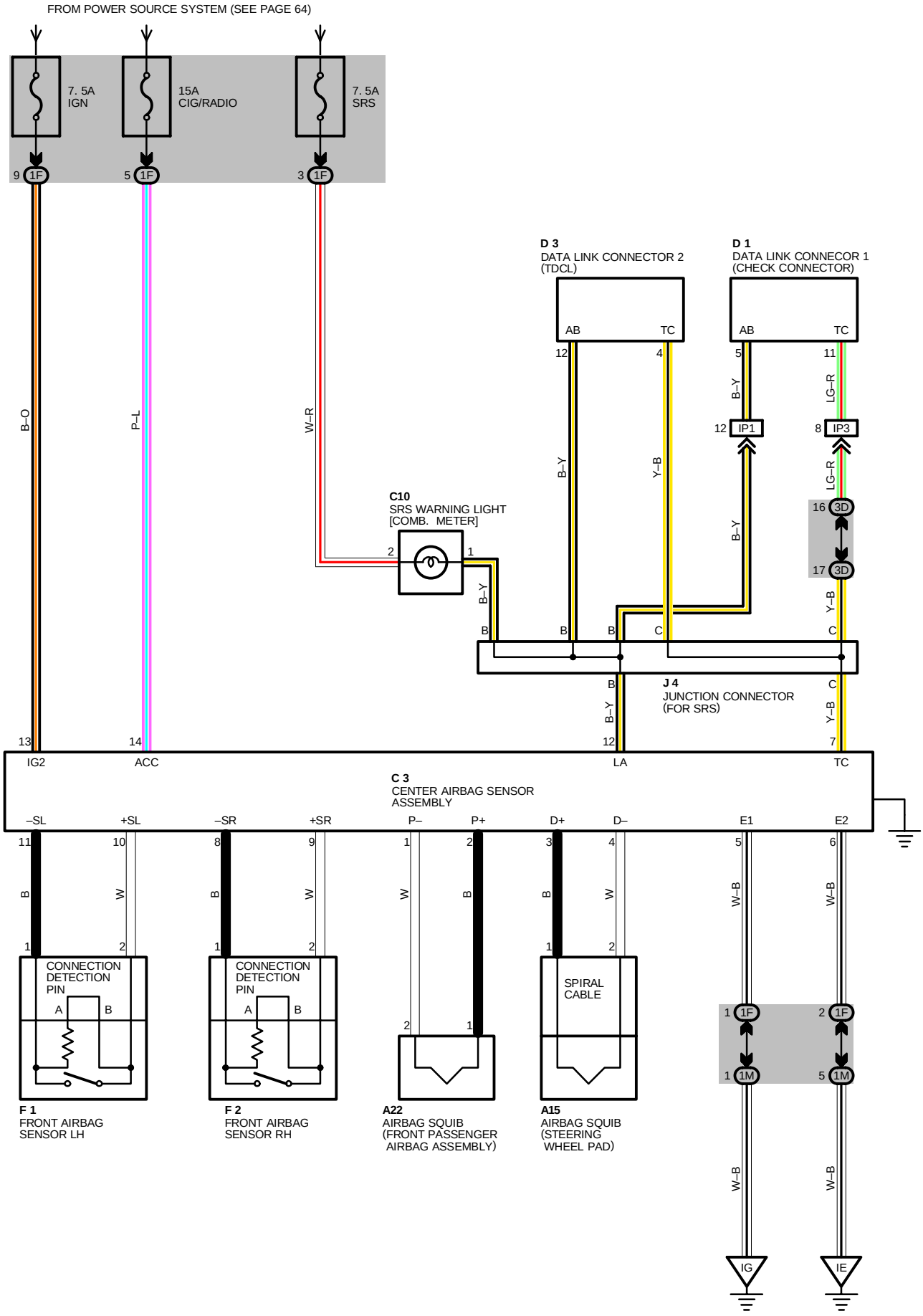
FROM POWER SOURCE SYSTEM (SEE PAGE 64)
7. 5A
IGN
15A
CIG/RADIO
7. 5A
SRS
9 1F
5 1F
3 1F
B–O
P–L
W–R
D 3
DATA LINK CONNECTOR 2
(TDCL)
D 1
DATA LINK CONNECOR 1
(CHECK CONNECTOR)
AB
TC
12
4
5
11
B–Y
LG–R
12 IP1
8 IP3
Y–B
C10
SRS WARNING LIGHT
[COMB. METER]
2
1
16 3D
17 3D
B
C
J 4
JUNCTION CONNECTOR
(FOR SRS)
13
14
IG2
ACC
LA
TC
C 3
CENTER AIRBAG SENSOR
ASSEMBLY
–SL
+SL
–SR
+SR
P–
P+
D+
D–
E1
E2
11
10
8
9
1
2
3
4
5
6
B
W
W–B
CONNECTION
DETECTION
PIN
A
B
SPIRAL
CABLE
1 1F
2 1F
1 1M
5 1M
F 1
FRONT AIRBAG
SENSOR LH
F 2
FRONT AIRBAG
SENSOR RH
A22
AIRBAG SQUIB
(FRONT PASSENGER
AIRBAG ASSEMBLY)
A15
AIRBAG SQUIB
(STEERING
WHEEL PAD)
IG
IE

SRS (SUPPLEMENTAL RESTRAINT SYSTEM)

SYSTEM OUTLINE

THE SRS (SUPPLEMENTAL RESTRAINT SYSTEM) IS A DRIVER AND PASSENGER PROTECTION DEVICE WHICH HAS A SUPPLEMENTAL ROLE TO THE SEAT BELTS.

WHEN THE IGNITION SW IS TURNED TO ACC OR ON, CURRENT FROM THE **CIG/RADIO** FUSE FLOWS TO **TERMINAL 14** OF THE CENTER AIRBAG SENSOR ASSEMBLY. ONLY WHEN THE IGNITION SW IS ON DOES THE CURRENT FROM THE **IGN** FUSE FLOW TO **TERMINAL 13**.

IF AN ACCIDENT OCCURS WHILE DRIVING, DECELERATION CAUSED BY A FRONTAL IMPACT IS DETECTED BY EACH SENSOR AND SWITCH, AND WHEN THE FRONTAL IMPACT EXCEEDS A SET LEVEL (WHEN THE SAFING SENSOR BUILT INTO THE CENTER AIRBAG SENSOR ASSEMBLY IS ON AND THE CENTER AIRBAG SENSOR IS ON, FRONT AIRBAG SENSORS ARE OFF), CURRENT FROM THE **CIG/RADIO** OR **IGN** FUSE FLOWS TO **TERMINALS 2**, **3** OF THE CENTER AIRBAG SENSOR ASSEMBLY → **TERMINAL 1** OF THE AIRBAG SQUIB → SQUIB → **TERMINAL 2** → **TERMINALS 1**, **4** OF CENTER AIRBAG SENSOR ASSEMBLY → **TERMINAL 6**, **TERMINAL 5** OR **BODY GROUND** → **GROUND**.

WHEN THE SAFING SENSOR BUILT INTO THE CENTER AIRBAG SENSOR ASSEMBLY IS ON AND THE FRONT AIRBAG SENSOR LH OR RH IS ON, CENTER AIRBAG SENSOR IS OFF CURRENT FROM THE **CIG/RADIO** OR **IGN** FUSE FLOWS TO **TERMINALS 2, 3** OF THE CENTER AIRBAG SENSOR ASSEMBLY → **TERMINAL 1** OF THE AIRBAG SQUIB → SQUIB → **TERMINAL 2** → **TERMINALS 1**, **4** OF CENTER AIRBAG SENSOR ASSEMBLY → **TERMINAL 8** OR **11** → **TERMINAL 1** OF FRONT AIRBAG SENSOR → **TERMINAL 2** → **TERMINAL 9** OR **10** OF CENTER AIRBAG SENSOR ASSEMBLY → **TERMINAL 6**, **TERMINAL 5** OR **BODY GROUND** → **GROUND**.

WHEN THE SAFING SENSOR BUILT INTO THE CENTER AIRBAG SENSOR ASSEMBLY IS ON, AND THE FRONT AIRBAG SENSOR LH OR RH IS ON AND CENTER AIRBAG SENSOR IS ON ONE OF THE ABOVE–MENTIONED CIRCUITS IS ACTIVATED SO THAT CURRENT FLOWS TO THE AIRBAG SQUIB AND CAUSES IT TO OPERATE. THE BAG STORED INSIDE THE STEERING WHEEL PAD IS INSTANTANEOUSLY EXPANDED TO SOFTEN THE SHOCK TO THE DRIVER.

○ : PARTS LOCATION

CODE	SEE PAGE	CODE	SEE PAGE	CODE	SEE PAGE
A15	32	**D 1**	28 (1MZ–FE), 30 (5S–FE)	**F 2**	28 (1MZ–FE), 30 (5S–FE)
C 3	32	**D 3**	32	**J 4**	33
C10	32	**F 1**	28 (1MZ–FE), 30 (5S–FE)		

⬭ : JUNCTION BLOCK AND WIRE HARNESS CONNECTOR

CODE	SEE PAGE	JUNCTION BLOCK AND WIRE HARNESS (CONNECTOR LOCATION)
1F	20	COWL WIRE AND J/B NO. 1 (INSTRUMENT PANEL LEFT)
1M		
3D	24	COWL WIRE AND J/B NO. 3 (BEHIND COMBINATION METER)

▭ : CONNECTOR JOINING WIRE HARNESS AND WIRE HARNESS

CODE	SEE PAGE	JOINING WIRE HARNESS AND WIRE HARNESS (CONNECTOR LOCATION)
IP1	44	ENGINE WIRE AND COWL WIRE
IP3		

▽ : GROUND POINTS

CODE	SEE PAGE	GROUND POINTS LOCATION
IE	42	LEFT KICK PANEL
IG	42	INSTRUMENT PANEL BRACE LH

A15 YELLOW

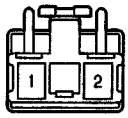

C 3 YELLOW

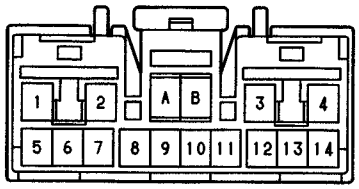

C10 GRAY

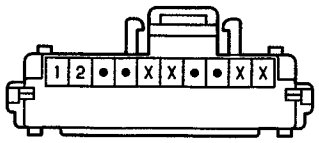

(1MZ-FE) D 1 BLACK

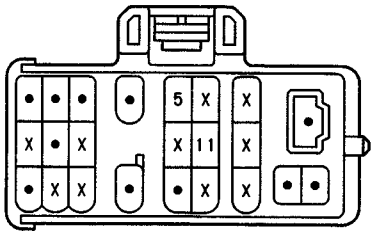

(5S-FE) D 1 BLACK

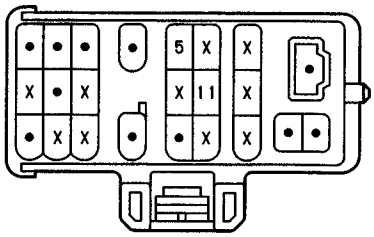

D 3 DARK GRAY

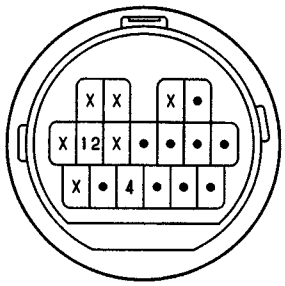

F 1, F 2 YELLOW

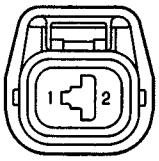

J 4

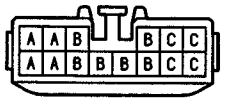

(HINT:SEE PAGE 7)

POWER SEAT

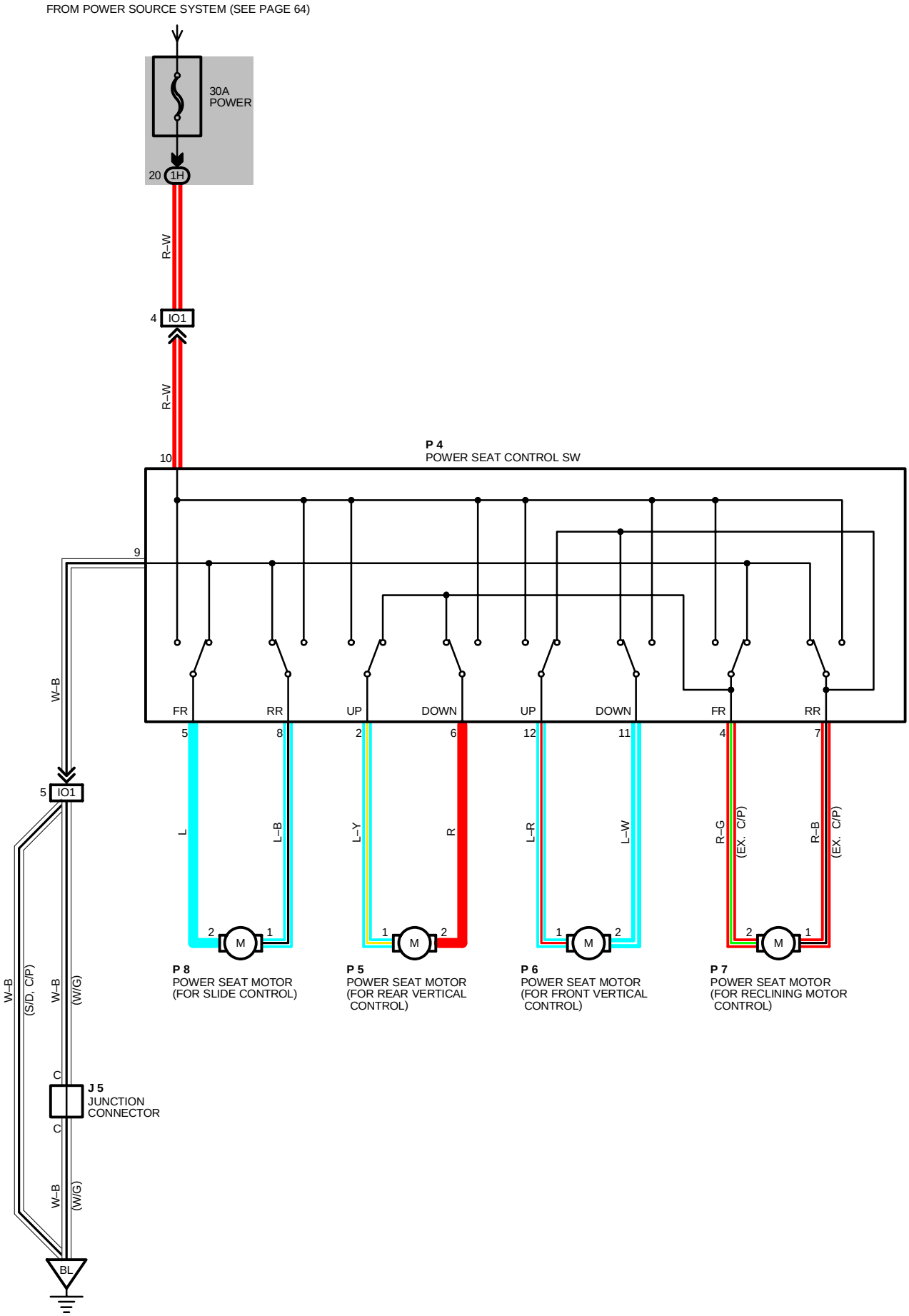
FROM POWER SOURCE SYSTEM (SEE PAGE 64)
30A
POWER
20
1H
R–W
4
IO1
R–W
10
P 4
POWER SEAT CONTROL SW
9
W–B
FR
RR
UP
DOWN
UP
DOWN
FR
RR
5
8
2
6
12
11
4
7
L
L–B
L–Y
R
L–R
L–W
R–G
(EX. C/P)
R–B
(EX. C/P)
2
M
1
1
M
2
1
M
2
2
M
1
P 8
POWER SEAT MOTOR
(FOR SLIDE CONTROL)
P 5
POWER SEAT MOTOR
(FOR REAR VERTICAL
CONTROL)
P 6
POWER SEAT MOTOR
(FOR FRONT VERTICAL
CONTROL)
P 7
POWER SEAT MOTOR
(FOR RECLINING MOTOR
CONTROL)
5
IO1
W–B
(S/D, C/P)
W–B
(W/G)
C
J 5
JUNCTION
CONNECTOR
C
W–B
(W/G)
BL

SERVICE HINTS

P 4 POWER SEAT CONTROL SW
10–GROUND : ALWAYS APPROX. **12** VOLTS
9–GROUND : ALWAYS CONTINUITY

: PARTS LOCATION

CODE	SEE PAGE	CODE	SEE PAGE	CODE	SEE PAGE
J 5	36 (W/G)	**P 5**	33	**P 7**	33
P 4	33	**P 6**	33	**P 8**	33

: JUNCTION BLOCK AND WIRE HARNESS CONNECTOR

CODE	SEE PAGE	JUNCTION BLOCK AND WIRE HARNESS (CONNECTOR LOCATION)
1H	20	FLOOR NO. 1 WIRE J/B NO. 1 (INSTRUMENT PANEL LEFT)

: CONNECTOR JOINING WIRE HARNESS AND WIRE HARNESS

CODE	SEE PAGE	JOINING WIRE HARNESS AND WIRE HARNESS (CONNECTOR LOCATION)
IO1	42	FLOOR NO. 1 WIRE AND SEAT WIRE

: GROUND POINTS

CODE	SEE PAGE	GROUND POINTS LOCATION
BL	46 (S/D)	UNDER THE LEFT QUARTER PILLAR
	48 (C/P)	
	50 (W/G)	

J 5

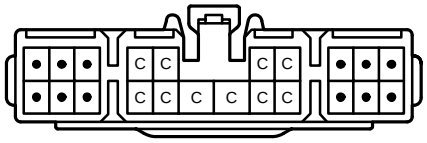

(HINT : SEE PAGE 7)

P 4 GRAY

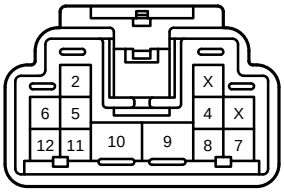

P 5 ORANGE

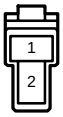

P 6 ORANGE

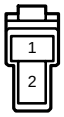

P 7 WHITE

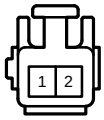

P 8 GREEN

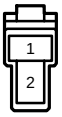

SHIFT LOCK

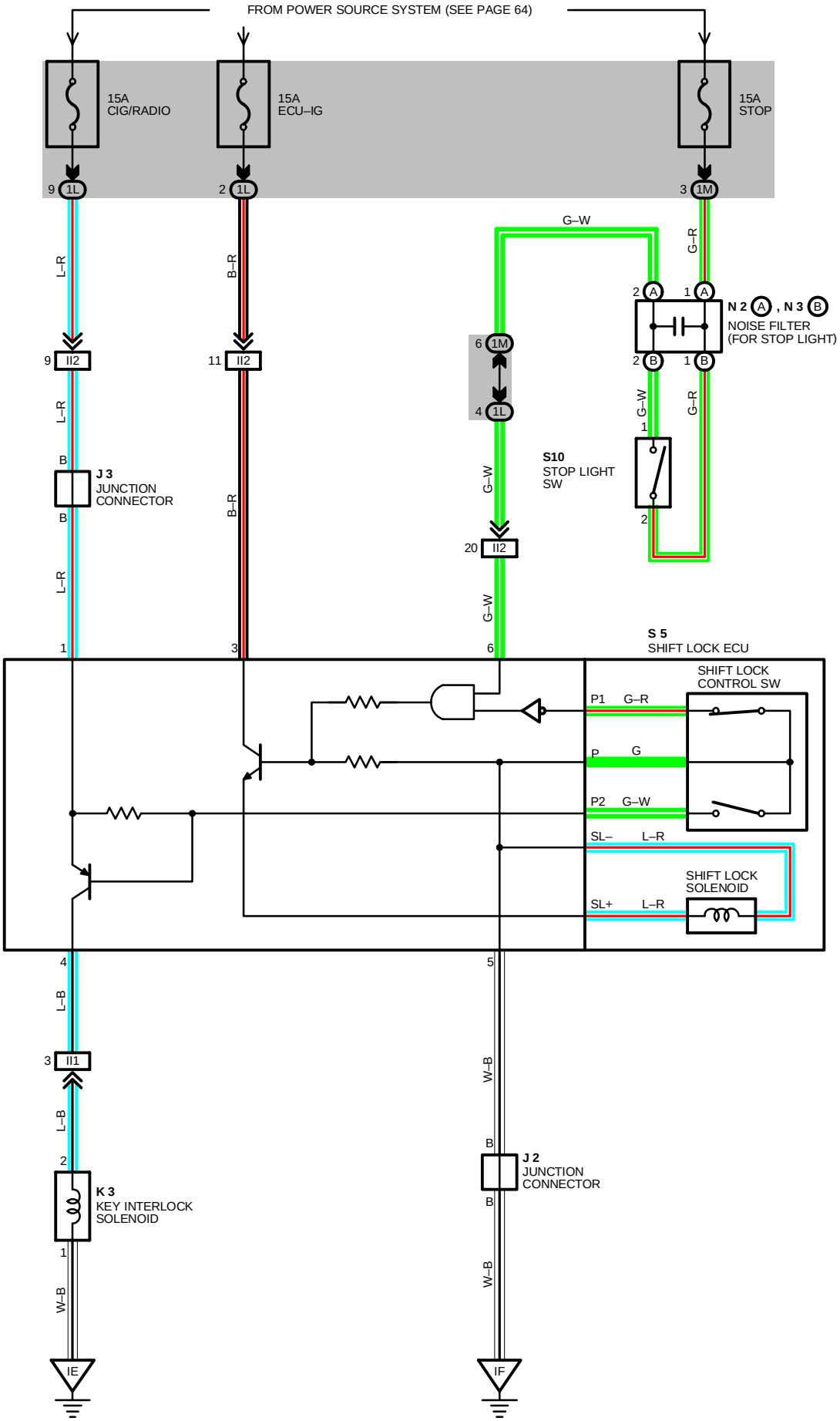
FROM POWER SOURCE SYSTEM (SEE PAGE 64)
15A
CIG/RADIO
15A
ECU–IG
15A
STOP
9 1L
2 1L
3 1M
L–R
B–R
G–W
G–R
2 A
1 A
N 2 A , N 3 B
NOISE FILTER
(FOR STOP LIGHT)
6 1M
4 1L
2 B
1 B
9 II2
11 II2
L–R
G–W
G–R
1
S10
STOP LIGHT
SW
2
B
J 3
JUNCTION
CONNECTOR
B
L–R
B–R
G–W
20 II2
G–W
1
3
6
S 5
SHIFT LOCK ECU
SHIFT LOCK
CONTROL SW
P1 G–R
P G
P2 G–W
SL– L–R
SHIFT LOCK
SOLENOID
SL+ L–R
4
5
L–B
W–B
3 II1
L–B
W–B
B
J 2
JUNCTION
CONNECTOR
B
2
K 3
KEY INTERLOCK
SOLENOID
1
W–B
W–B
IE
IF

SYSTEM OUTLINE

WHEN THE IGNITION SW IS TURNED TO **ACC** POSITION THE CURRENT FROM THE **CIG/RADIO** FUSE FLOWS TO **TERMINAL 1** OF THE SHIFT LOCK ECU. WHEN THE IGNITION SW IS TURNED TO **ON** POSITION THE CURRENT FROM THE **ECU–IG** FUSE FLOWS TO **TERMINAL 3** OF THE ECU.

1. SHIFT LOCK MECHANISM

WITH THE IGNITION SW ON, WHEN A SIGNAL THAT THE BRAKE PEDAL IS DEPRESSED (STOP LIGHT SW ON) AND A SIGNAL THAT THE SHIFT LEVER IS PUT IN **"P"** POSITION (CONTINUITY BETWEEN P1 AND P OF THE SHIFT LOCK CONTROL SW) IS INPUT TO THE ECU, THE ECU OPERATES AND CURRENT FLOWS FROM **TERMINAL 3** OF THE ECU → **TERMINAL SL+** OF THE SHIFT LOCK SOLENOID → SOLENOID → **TERMINAL SL–** → **TERMINAL 5** OF THE ECU → **GROUND**. THIS CAUSES THE SHIFT LOCK SOLENOID TO TURN ON (PLATE STOPPER DISENGAGES) AND THE SHIFT LEVER CAN SHIFT INTO OTHER POSITION THAN THE **"P"** POSITION.

2. KEY INTERLOCK MECHANISM

WITH THE IGNITION SW IN **ON** OR **ACC** POSITION, WHEN THE SHIFT LEVER IS PUT IN **"P"** POSITION (NO CONTINUITY BETWEEN P2 AND P OF SHIFT LOCK CONTROL SW), THE CURRENT FLOWING FROM **TERMINAL 4** OF THE ECU → KEYINTERLOCK SOLENOID IS CUT OFF. THIS CAUSES THE KEYINTERLOCK SOLENOID TO TURN OFF (LOCK LEVER DISENGAGES FROM **LOCK** POSITION) AND THE IGNITION KEY CAN BE TURNED FROM **ACC** TO **LOCK** POSITION.

SERVICE HINTS

S 5 SHIFT LOCK ECU

1–GROUND : APPROX. **12** VOLTS WITH IGNITION SW AT **ACC** OR **ON** POSITION
3–GROUND : APPROX. **12** VOLTS WITH IGNITION SW AT **ON** POSITION
5–GROUND : ALWAYS CONTINUITY
6–GROUND : APPROX. **12** VOLTS WITH BRAKE PEDAL DEPRESSED
4–GROUND : **0** VOLTS WITH IGNITION SW AT **ACC** POSITION AND SHIFT LEVER POSITION IN **P** POSITION
6–12 VOLTS WITH SHIFT LEVER POSITION IN EXCEPT **P** POSITION

○ : PARTS LOCATION

CODE	SEE PAGE	CODE		SEE PAGE	CODE	SEE PAGE
J 2	33	**N 2**	A	33	**S10**	33
J 3	33	**N 3**	B	33		
K 3	33	**S 5**		33		

⬭ : JUNCTION BLOCK AND WIRE HARNESS CONNECTOR

CODE	SEE PAGE	JUNCTION BLOCK AND WIRE HARNESS (CONNECTOR LOCATION)
1L	20	COWL WIRE AND J/B NO. 1 (INSTRUMENT PANEL LEFT)
1M		

▭ : CONNECTOR JOINING WIRE HARNESS AND WIRE HARNESS

CODE	SEE PAGE	JOINING WIRE HARNESS AND WIRE HARNESS (CONNECTOR LOCATION)
II1	42	COWL WIRE AND INSTRUMENT PANEL WIRE
II2	42	INSTRUMENT PANEL WIRE AND COWL WIRE

▽ : GROUND POINTS

CODE	SEE PAGE	GROUND POINTS LOCATION
IE	42	LEFT KICK PANEL
IF		

J 2

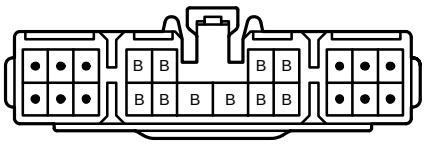

(HINT : SEE PAGE 7)

J 3

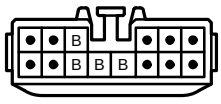

(HINT : SEE PAGE 7)

K 3

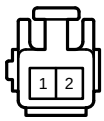

N 2 (A)

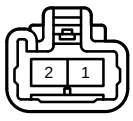

N 3 (B)

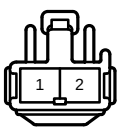

S 5

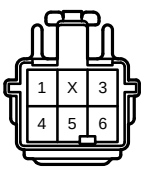

S10 BLUE

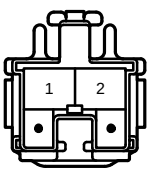

FRONT WIPER AND WASHER

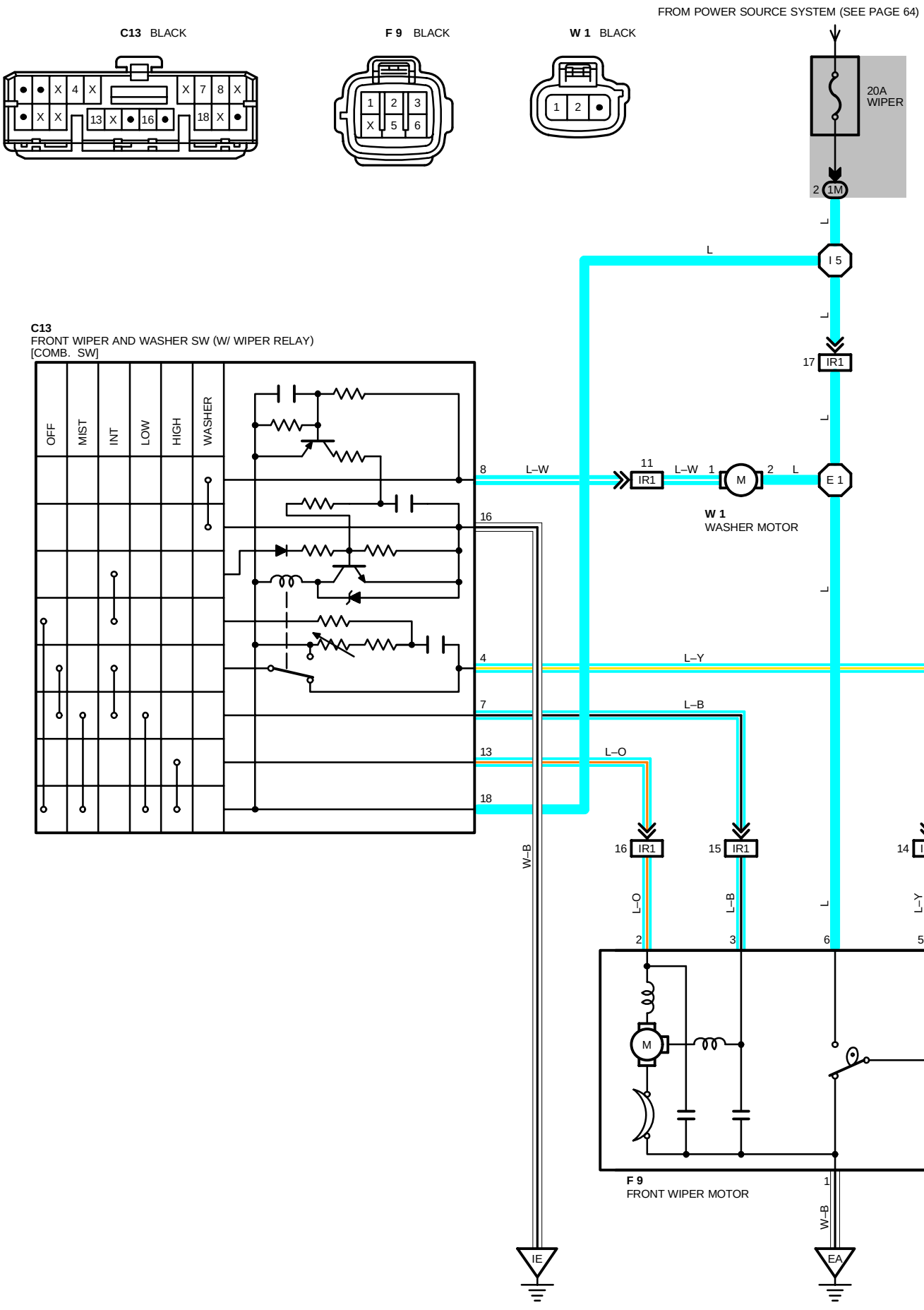

SYSTEM OUTLINE

WITH THE IGNITION SW TURNED ON, THE CURRENT FLOWS TO **TERMINAL 18** OF THE WIPER AND WASHER SW, **TERMINAL 2** OF THE WASHER MOTOR AND **TERMINAL 4** OF THE WIPER MOTOR THROUGH THE **WIPER** FUSE.

1. LOW SPEED POSITION

WITH WIPER SW TURNED TO **LOW** POSITION, THE CURRENT FLOWS FROM **TERMINAL 18** OF THE WIPER AND WASHER SW → **TERMINAL 7** → **TERMINAL 3** OF THE WIPER MOTOR → WIPER MOTOR → **TERMINAL 1** → TO **GROUND** AND CAUSES TO THE WIPER MOTOR TO RUN AT LOW SPEED.

2. HIGH SPEED POSITION

WITH WIPER SW TURNED TO **HIGH** POSITION, THE CURRENT FLOWS FROM **TERMINAL 18** OF THE WIPER AND WASHER SW → **TERMINAL 13** → **TERMINAL 2** OF THE WIPER MOTOR → WIPER MOTOR → **TERMINAL 1** → TO **GROUND** AND CAUSES TO THE WIPER MOTOR TO RUN AT HIGH SPEED.

3. INT POSITION

WITH WIPER SW TURNED TO **INT** POSITION, THE RELAY OPERATES AND THE CURRENT WHICH IS CONNECTED BY RELAY FUNCTION FLOWS FROM **TERMINAL 18** OF THE WIPER AND WASHER SW → **TERMINAL 16** → TO **GROUND**. THIS FLOW OF CURRENT OPERATES THE INTERMITTENT CIRCUIT AND THE CURRENT FLOWS FROM **TERMINAL 18** OF THE WIPER AND WASHER SW → **TERMINAL 7** → **TERMINAL 3** OF THE WIPER MOTOR → **TERMINAL 1** → TO **GROUND** AND THE WIPER FUNCTIONS.

THE INTERMITTENT OPERATION IS CONTROLLED BY A CONDENSER'S CHARGED AND DISCHARGED FUNCTION INSTALLED IN RELAY AND THE INTERMITTENT TIME IS CONTROLLED BY A TIME CONTROL SW TO CHANGE THE CHARGING TIME OF THE CONDENSER.

4. WASHER CONTINUOUS OPERATION

WITH WASHER SW TURNED TO ON, THE CURRENT FLOWS FROM **TERMINAL 2** OF THE WASHER MOTOR → **TERMINAL 1** → **TERMINAL 8** OF THE WIPER AND WASHER SW → **TERMINAL 16** → TO **GROUND** AND CAUSES TO THE WASHER MOTOR TO RUN AND WINDOW WASHER TO JET. THIS CAUSES THE CURRENT TO FLOW TO WASHER CONTINUOUS OPERATION CIRCUIT IN **TERMINAL 18** OF THE WIPER AND WASHER SW → **TERMINAL 7** → **TERMINAL 3** OF THE WIPER MOTOR → **TERMINAL 1** → TO **GROUND** AND THE WIPER FUNCTION.

SERVICE HINTS

C13 FRONT WIPER AND WASHER SW (W/ WIPER RELAY) [COMB. SW]

16–GROUND : ALWAYS CONTINUITY
18–GROUND : APPROX. **12** VOLTS WITH IGNITION SW AT **ON** POSITION
7–GROUND : APPROX. **12** VOLTS WITH WIPER AND WASHER SW AT **LOW** OR **MIST** POSITION
APPROX. **12** VOLTS **2** TO **12** SECONDS INTERMITTENTLY WITH WIPER SW AT **INT** POSITION
4–GROUND : APPROX. **12** VOLTS WITH IGNITION SW ON UNLESS WIPER MOTOR AT **STOP** POSITION
13–GROUND : APPROX. **12** VOLTS WITH WIPER AND WASHER SW AT **HIGH** POSITION

F 9 FRONT WIPER MOTOR

5–6 : CLOSED UNLESS WIPER MOTOR AT **STOP** POSITION

: PARTS LOCATION

CODE	SEE PAGE	CODE	SEE PAGE	CODE	SEE PAGE
C13	32	**F 9**	28 (1MZ–FE), 30 (5S–FE)	**W 1**	28 (1MZ–FE), 30 (5S–FE)

: JUNCTION BLOCK AND WIRE HARNESS CONNECTOR

CODE	SEE PAGE	JUNCTION BLOCK AND WIRE HARNESS (CONNECTOR LOCATION)
1H	20	FLOOR NO. 1 WIRE J/B NO. 1 (INSTRUMENT PANEL LEFT)
1M	20	COWL WIRE AND J/B NO. 1 (INSTRUMENT PANEL LEFT)

: CONNECTOR JOINING WIRE HARNESS AND WIRE HARNESS

CODE	SEE PAGE	JOINING WIRE HARNESS AND WIRE HARNESS (CONNECTOR LOCATION)
IR1	44	ENGINE ROOM MAIN WIRE AND COWL WIRE

: GROUND POINTS

CODE	SEE PAGE	GROUND POINTS LOCATION
EA	38 (1MZ–FE)	FRONT RIGHT FENDER
	40 (5S–FE)	
IE	42	LEFT KICK PANEL

: SPLICE POINTS

CODE	SEE PAGE	WIRE HARNESS WITH SPLICE POINTS	CODE	SEE PAGE	WIRE HARNESS WITH SPLICE POINTS
E 1	38 (1MZ–FE)	ENGINE ROOM MAIN WIRE	**I 5**	44	COWL WIRE
	40 (5S–FE)				

REAR WIPER AND WASHER

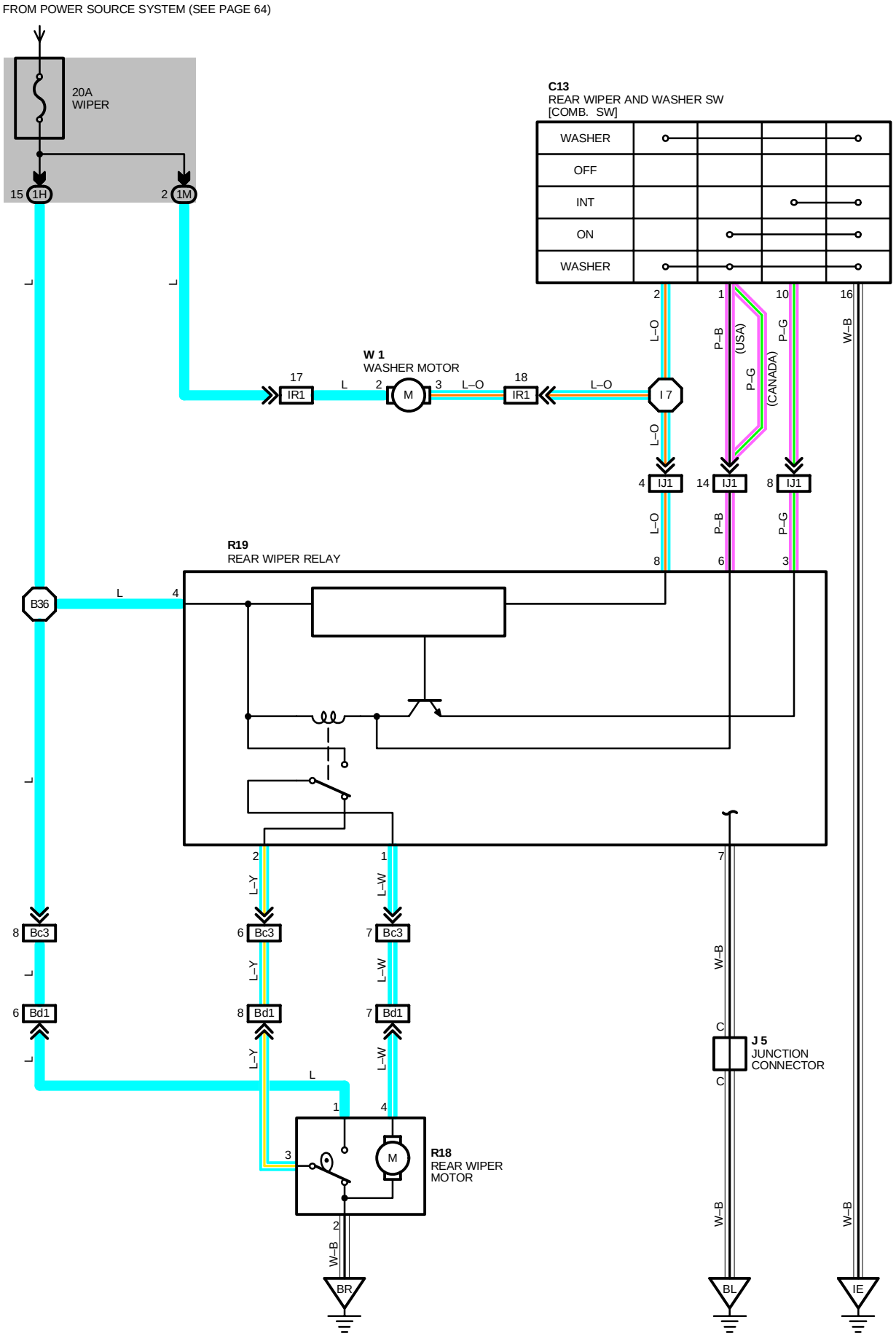

SYSTEM OUTLINE

WHEN THE IGNITION SW IS TURNED ON, CURRENT FLOWS TO **TERMINAL 2** OF WASHER MOTOR, **TERMINAL 4** OF REAR WIPER RELAY AND **TERMINAL 1** OF REAR WIPER MOTOR THROUGH THE **WIPER** FUSE.

1. REAR WIPER NORMAL OPERATION

WITH THE IGNITION SW TURNED ON AND REAR WIPER AND WASHER SW TURNED ON, THE CURRENT FLOWING TO **TERMINAL 4** OF REAR WIPER RELAY FLOWS TO **TERMINAL 6** OF RELAY → **TERMINAL 1** OF REAR WIPER AND WASHER SW → **TERMINAL 16** → TO **GROUND**. THUS, THE RELAY COIL IS ACTIVATED AND THE CURRENT TO **TERMINAL 4** OF RELAY FLOWS TO **TERMINAL 1** → **TERMINAL 4** OF REAR WIPER MOTOR → MOTOR → **TERMINAL 2** → TO **GROUND** AND CAUSES THE MOTOR TO OPERATE THE WIPER.

2. REAR WIPER INTERMITTENT OPERATION

WITH THE IGNITION SW TURNED ON AND REAR WIPER AND WASHER SW TURNED TO **INT** POSITION, THE CURRENT FLOWING TO **TERMINAL 4** OF REAR WIPER RELAY FLOWS TO **TERMINAL 3** OF RELAY → **TERMINAL 10** OF WIPER SW → **TERMINAL 16** → TO **GROUND**. AS A RESULT, THE RELAY OPERATES AND CURRENT FLOWS FROM **TERMINAL 4** OF RELAY → **TERMINAL 1** → **TERMINAL 4** OF REAR WIPER MOTOR → MOTOR → **TERMINAL 2** → TO **GROUND**, CAUSING THE MOTOR TO ROTATE TO OPERATE THE WIPER. AT THIS TIME THE CONTACT IN THE WIPER MOTOR CLOSED AND THE CURRENT FLOWS FROM **TERMINAL 1** OF REAR WIPER MOTOR → **TERMINAL 3** → **TERMINAL 2** OF REAR WIPER RELAY → **TERMINAL 1** → **TERMINAL 4** OF REAR WIPER MOTOR → **TERMINAL 2** → TO **GROUND**.

THUS, THE INTERMITTENT–STOP CIRCUIT OPERATES, THE CONDENOR IN THE CIRCUIT CHARGES AND THE WIPER CONTINUES TO OPERATE UNTIL REACHING THE STOP POSITION. AFTER THE WIPER STOPS, CURRENT DOES NOT FLOW TO THE INTERMITTENT–STOP CIRCUIT FROM **TERMINAL 2** OF RELAY, BUT THE CONDENSER DISCHARGES CURRENT INTO THE INTERMITTENT CIRCUIT AND THE CIRCUIT OPERATES UNTIL THE CONDENSER DISCHARGE ENDS. AS A RESULT, THIS DISCHARGE INTERVAL BECOMES THE INTERMITTENT TIME.

WHEN THE CURRENT IS DISCHARGED COMPLETELY, THE CURRENT FLOWING TO **TERMINAL 4** OF RELAY FLOWS TO **TERMINAL 3** → **TERMINAL 10** OF REAR WIPER AND WASHER SW → **TERMINAL 16** → TO **GROUND**.

THEN, THE CURRENT IN **TERMINAL 4** OF RELAY FLOWS FROM **TERMINAL 1** → **TERMINAL 4** OF MOTOR → MOTOR → **TERMINAL 2** → TO **GROUND** AND ROTATES THE MOTOR. THROUGH REPEITION OF THIS PROCESS, INTERMITTENT OPERATION OF THE REAR WIPER OCCURS.

3. WASHER OPERATION

WITH THE IGNITION SW ON AND THE REAR WIPER AND WASHER SW IS TURNED STRONGLY (WASHER SW ON), CURRENT FLOWS FROM **TERMINAL 2** OF WASHER MOTOR → **TERMINAL 3** → **TERMINAL 2** OF REAR WIPER AND WASHER SW → **TERMINAL 16** → TO **GROUND** SO THAT THE WASHER MOTOR ROTATES AND WINDOW WASHER EJECTS THE SPRAY, ONLY THE WHILE THE REAR WASHER SW IS TURNED, WHEN THE REAR WIPER SW IS OFF, AND THE REAR WIPER AND WASHER SW IS THEN TURNED IN THE OFF DIRECTION, WASHER LIQUID WILL ALSO SPLAY.

SERVICE HINTS

R19 REAR WIPER RELAY

4–GROUND : APPROX. **12** VOLTS WITH IGNITION SW AT **ON** POSITION
7–GROUND : ALWAYS CONTINUITY
1–4 : POINTS CHANGES EVERY APPROX. **9–15** SECONDS INTERMITTENTLY WITH IGNITION SW ON AND WIPER SW AT **INT** POSITION

W 1 WASHER MOTOR

2–GROUND : APPROX. **12** VOLTS WITH IGNITION SW AT **ON** POSITION
3–GROUND : CONTINUITY WITH WASHER SW TURNED ON

REAR WIPER AND WASHER

: PARTS LOCATION

CODE	SEE PAGE	CODE	SEE PAGE	CODE	SEE PAGE
C13	32	**R18**	36 (W/G)	**W 1**	29 (1MZ–FE), 30 (5S–FE)
J 5	36 (W/G)	**R19**	36 (W/G)		

: JUNCTION BLOCK AND WIRE HARNESS CONNECTOR

CODE	SEE PAGE	JUNCTION BLOCK AND WIRE HARNESS (CONNECTOR LOCATION)
1H	20	FLOOR NO. 1 WIRE J/B NO. 1 (INSTRUMENT PANEL LEFT)
1M	20	COWL WIRE AND J/B NO. 1 (INSTRUMENT PANEL LEFT)

: CONNECTOR JOINING WIRE HARNESS AND WIRE HARNESS

CODE	SEE PAGE	JOINING WIRE HARNESS AND WIRE HARNESS (CONNECTOR LOCATION)
IJ1	42	FLOOR NO. 1 WIRE AND COWL WIRE
IR1	44	ENGINE ROOM MAIN WIRE AND COWL WIRE
Bc1	50 (W/G)	BACK DOOR NO. 1 WIRE AND FLOOR NO. 1 WIRE
Bd1	50 (W/G)	BACK DOOR NO. 1 WIRE AND BACK DOOR NO. 2 WIRE

: GROUND POINTS

CODE	SEE PAGE	GROUND POINTS LOCATION
IE	42	LEFT KICK PANEL
BL	46 (S/D)	UNDER THE LEFT QUARTER PILLAR
	48 (C/P)	
	50 (W/G)	
BR	50 (W/G)	BACK DOOR CENTER

: SPLICE POINTS

CODE	SEE PAGE	WIRE HARNESS WITH SPLICE POINTS	CODE	SEE PAGE	WIRE HARNESS WITH SPLICE POINTS
I 7	44	COWL WIRE	**B36**	50 (W/G)	FLOOR NO. 1 WIRE

C13 BLACK

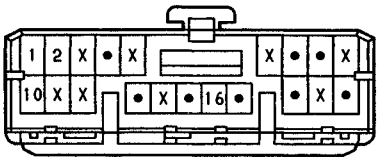

J 5

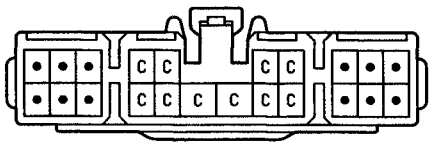

(HINT:SEE PAGE 7)

R18



R19



W 1

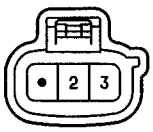

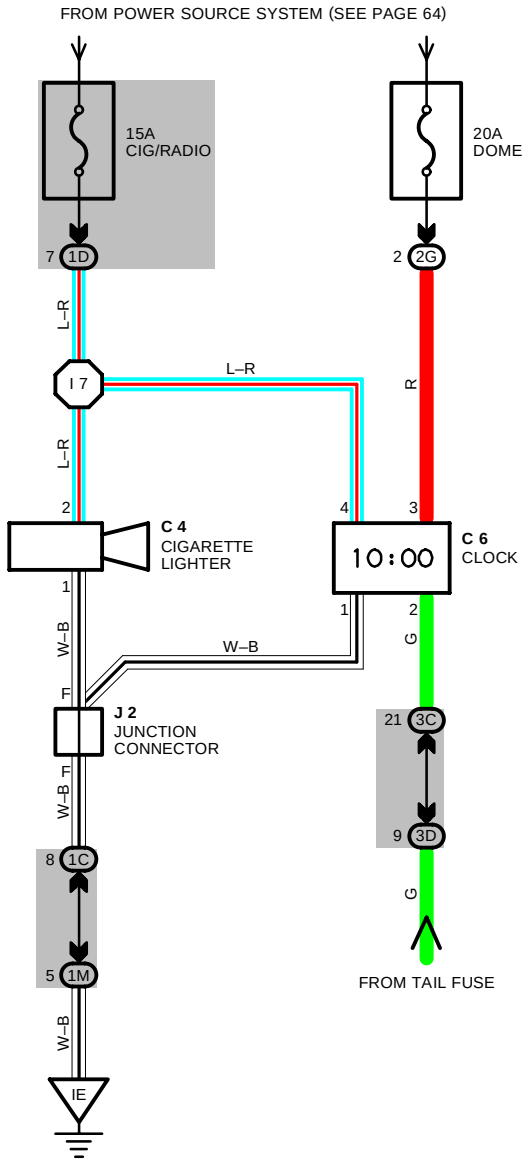

SERVICE HINTS

C 4 CIGARETTE LIGHTER

2–GROUND	:	APPROX. **12** VOLTS WITH IGNITION SW AT **ACC** OR **ON** POSITION
1–GROUND	:	ALWAYS CONTINUITY

C 6 CLOCK

3–GROUND	:	ALWAYS APPROX. **12** VOLTS (POWER FOR CLOCK)
4–GROUND	:	APPROX .**12** VOLTS WITH IGNITION SW AT **ACC** OR **ON** POSITION (POWER FOR INDICATION)
2–GROUND	:	APPROX .**12** VOLTS WITH LIGHT CONTROL SW AT **TAIL** OR **HEAD** POSITION APPROX. **12** VOLTS WITH ENGINE RUNNING AND PARKING BRAKE RELEASED (CANADA)
1–GROUND	:	ALWAYS CONTINUITY

C 4



C 6 BLACK



J 2 DARK GRAY

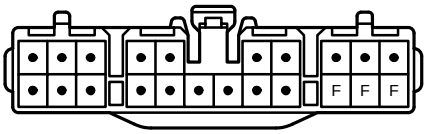

(HINT : SEE PAGE 7)

: PARTS LOCATION

CODE	SEE PAGE	CODE	SEE PAGE	CODE	SEE PAGE
C 4	32	**C 6**	32	**J 2**	33

: JUNCTION BLOCK AND WIRE HARNESS CONNECTOR

CODE	SEE PAGE	JUNCTION BLOCK AND WIRE HARNESS (CONNECTOR LOCATION)
1B	20	COWL WIRE AND J/B NO. 1 (INSTRUMENT PANEL LEFT)
1C		
1D		
1M		
2E	22	ENGINE ROOM MAIN WIRE AND J/B NO. 2 (ENGINE COMPARTMENT LEFT)

: GROUND POINTS

CODE	SEE PAGE	GROUND POINTS LOCATION
IE	42	LEFT KICK PANEL

: SPLICE POINTS

CODE	SEE PAGE	WIRE HARNESS WITH SPLICE POINTS	CODE	SEE PAGE	WIRE HARNESS WITH SPLICE POINTS
I 7	44	COWL WIRE			

REAR WINDOW DEFOGGER

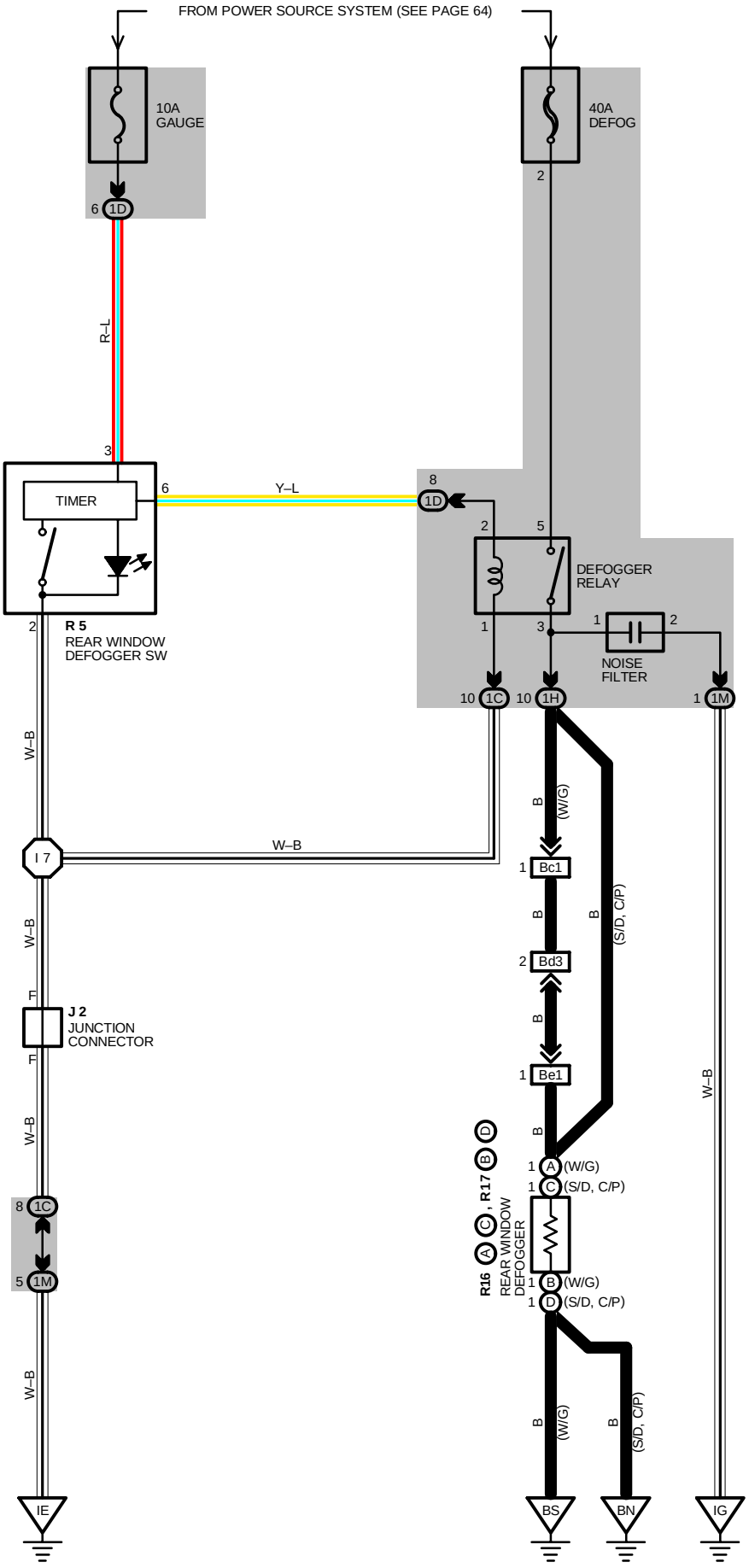

SERVICE HINTS

DEFOGGER RELAY

5–3 : CLOSED WITH IGNITION SW ON, DEFOGGER SW ON

R 5 REAR WINDOW DEFOGGER SW

3–GROUND : APPROX. **12** VOLTS WITH IGNITION SW AT **ON** POSITION

2–GROUND : ALWAYS CONTINUITY

3–6 : CONTINUITY WITH DEFOGGER SW ON

: PARTS LOCATION

CODE	SEE PAGE	CODE		SEE PAGE	CODE		SEE PAGE
J 2	33	**R16**	A	34 (S/D), 35 (C/P), 36 (W/G)	**R17**	B	34 (S/D), 35 (C/P), 36 (W/G)
R 5	33		C	34 (S/D), 35 (C/P), 36 (W/G)		D	34 (S/D), 35 (C/P), 36 (W/G)

: JUNCTION BLOCK AND WIRE HARNESS CONNECTOR

CODE	SEE PAGE	JUNCTION BLOCK AND WIRE HARNESS (CONNECTOR LOCATION)
1C	20	COWL WIRE AND J/B NO. 1 (INSTRUMENT PANEL LEFT)
1D		
1H	20	FLOOR NO. 1 WIRE J/B NO. 1 (INSTRUMENT PANEL LEFT)
1M	20	COWL WIRE AND J/B NO. 1 (INSTRUMENT PANEL LEFT)

: CONNECTOR JOINING WIRE HARNESS AND WIRE HARNESS

CODE	SEE PAGE	JOINING WIRE HARNESS AND WIRE HARNESS (CONNECTOR LOCATION)
Bc1	50 (W/G)	BACK DOOR NO. 1 WIRE AND FLOOR NO. 1 WIRE
Bd3	50 (W/G)	BACK DOOR NO. 1 WIRE AND BACK DOOR NO. 2 WIRE
Be1	50 (W/G)	REAR WINDOW NO. 1 WIRE AND BACK DOOR NO. 2 WIRE

: GROUND POINTS

CODE	SEE PAGE	GROUND POINTS LOCATION
IE	42	LEFT KICK PANEL
IG	42	INSTRUMENT PANEL BRACE LH
BN	46 (S/D)	UNDER THE RIGHT QUARTER PILLAR
	48 (C/P)	
BS	50 (W/G)	BACK DOOR RIGHT

: SPLICE POINTS

CODE	SEE PAGE	WIRE HARNESS WITH SPLICE POINTS	CODE	SEE PAGE	WIRE HARNESS WITH SPLICE POINTS
I 7	44	COWL WIRE			

J 2 DARK GRAY

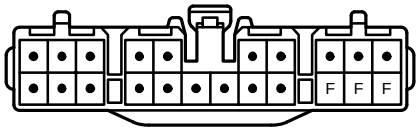

(HINT : SEE PAGE 7)

R 5 BLUE



R16 (A) , **R17** (B)

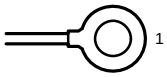

R16 (C) BLACK , **R17** (D) BLACK



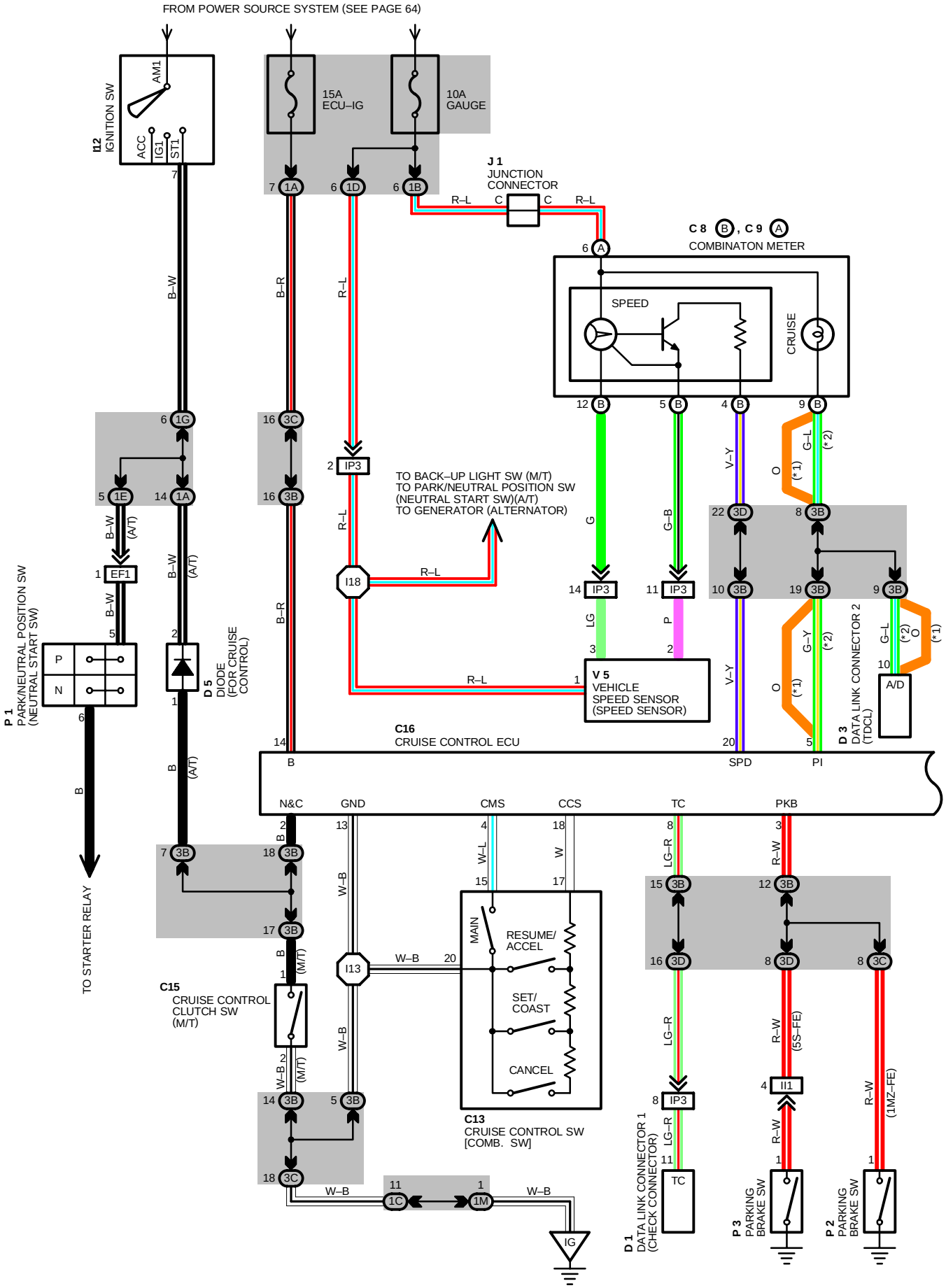
FROM POWER SOURCE SYSTEM (SEE PAGE 64)
I12
IGNITION SW
AM1
ACC
IG1
ST1
15A
ECU–IG
10A
GAUGE
J1
JUNCTION
CONNECTOR
C8 B, C9 A
COMBINATON METER
SPEED
CRUISE
TO BACK–UP LIGHT SW (M/T)
TO PARK/NEUTRAL POSITION SW
(NEUTRAL START SW)(A/T)
TO GENERATOR (ALTERNATOR)
P1
PARK/NEUTRAL POSITION SW
(NEUTRAL START SW)
D5
DIODE
(FOR CRUISE
CONTROL)
V5
VEHICLE
SPEED SENSOR
(SPEED SENSOR)
C16
CRUISE CONTROL ECU
D3
DATA LINK CONNECTOR 2
(TDCL)
A/D
N&C
GND
CMS
CCS
TC
PKB
SPD
PI
TO STARTER RELAY
C15
CRUISE CONTROL
CLUTCH SW
(M/T)
MAIN
RESUME/
ACCEL
SET/
COAST
CANCEL
C13
CRUISE CONTROL SW
[COMB. SW]
D1
DATA LINK CONNECTOR 1
(CHECK CONNECTOR)
TC
P3
PARKING
BRAKE SW
P2
PARKING
BRAKE SW
(5S–FE)
(1MZ–FE)
IG

*1 : TMC MADE
*2 : TMM MADE

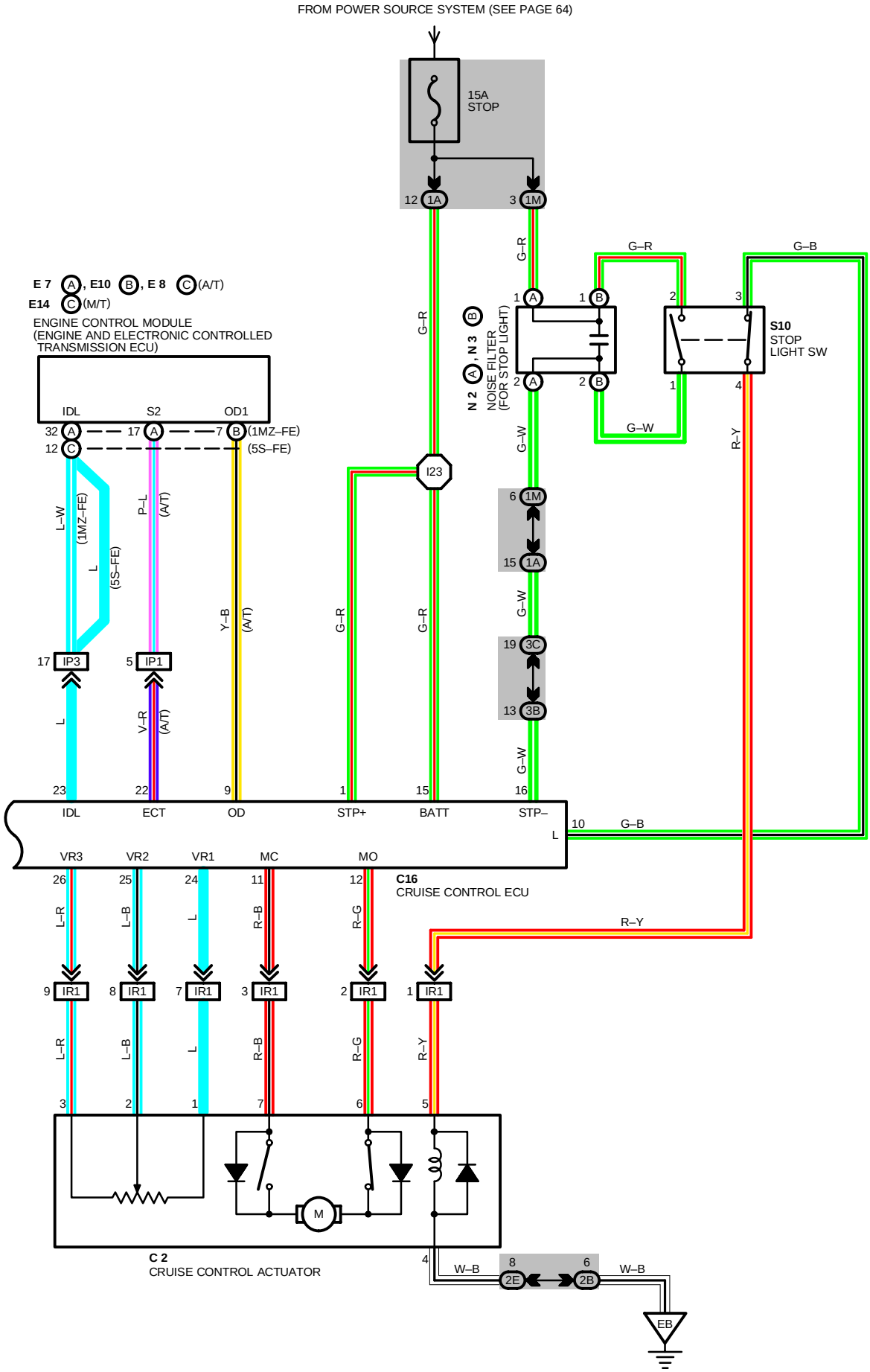

: PARTS LOCATION

CODE	SEE PAGE	CODE	SEE PAGE	CODE	SEE PAGE
C 2	28 (1MZ–FE), 30 (5S–FE)	D 5	32	N 3 B	33
C 8 B	32	E 7 A	32	P 1	29 (1MZ–FE), 31 (5S–FE)
C 9 A	32	E 8 C	32	P 2	33
C13	32	E10 B	32	P 3	33
C15	32	E14 C	32	S10	33
C16	32	I12	33	V 5	29 (1MZ–FE), 31 (5S–FE)
D 1	28 (1MZ–FE), 30 (5S–FE)	J 1	33		
D 3	32	N 2 A	33		

: JUNCTION BLOCK AND WIRE HARNESS CONNECTOR

CODE	SEE PAGE	JUNCTION BLOCK AND WIRE HARNESS (CONNECTOR LOCATION)
1A	20	COWL WIRE AND J/B NO. 1 (INSTRUMENT PANEL LEFT)
1B		
1C		
1D		
1E		
1G		
1M		
2B	22	ENGINE ROOM MAIN WIRE AND J/B NO. 2 (ENGINE COMPARTMENT LEFT)
2E		
3B	24	COWL WIRE AND J/B NO. 3 (BEHIND COMBINATION METER)
3C		
3D		

: CONNECTOR JOINING WIRE HARNESS AND WIRE HARNESS

CODE	SEE PAGE	JOINING WIRE HARNESS AND WIRE HARNESS (CONNECTOR LOCATION)
EF1	38 (1MZ–FE)	ENGINE WIRE AND COWL WIRE
	40 (5S–FE)	
II1	42	COWL WIRE AND INSTRUMENT PANEL WIRE
IP1	44	ENGINE WIRE AND COWL WIRE
IP3		
IR1	44	ENGINE ROOM MAIN WIRE AND COWL WIRE

: GROUND POINTS

CODE	SEE PAGE	GROUND POINTS LOCATION
EB	38 (1MZ–FE)	FRONT LEFT FENDER
	40 (5S–FE)	
IG	42	INSTRUMENT PANEL BRACE LH

: SPLICE POINTS

CODE	SEE PAGE	WIRE HARNESS WITH SPLICE POINTS	CODE	SEE PAGE	WIRE HARNESS WITH SPLICE POINTS
I13	44	COWL WIRE	I23	44	COWL WIRE
I18	44	ENGINE WIRE			

C 2 GRAY

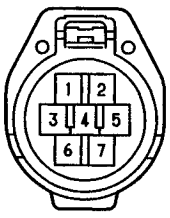

C 8 (B) BLUE

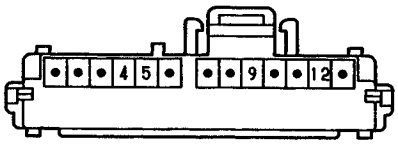

C 9 (A)

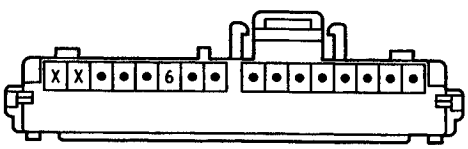

C13 BLACK

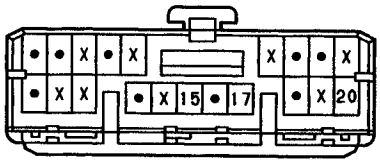

C15



C16 GRAY

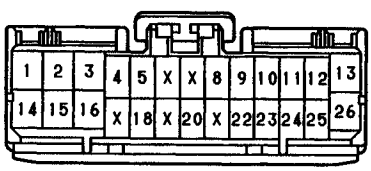

(1MZ-FE) D 1 BLACK

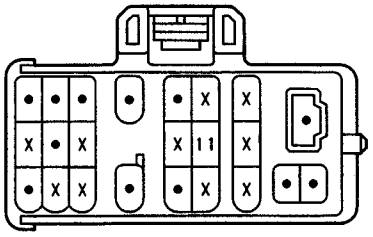

(5S-FE) D 1 BLACK

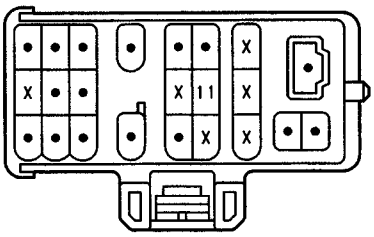

D 3 DARK GRAY

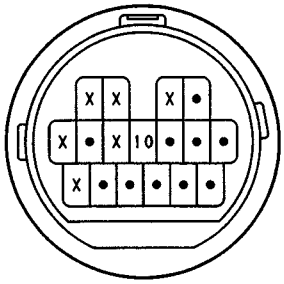

D 5 BLACK



(1MZ-FE) E 7 (A) DARK GRAY

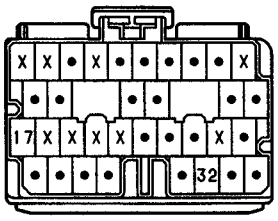

(5S-FE) E 8 (C) DARK GRAY

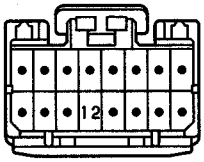

(1MZ-FE) E10 (B) DARK GRAY

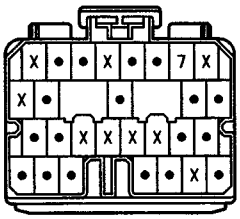

I12

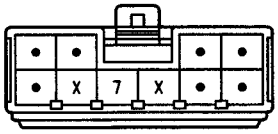

J 1 DARK GRAY

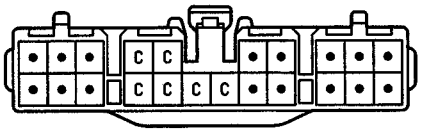

(HINT:SEE PAGE 7)

N 2 (A)



N 3 (B)

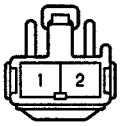

P 1 GRAY

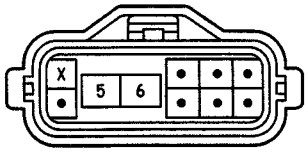

(1MZ-FE) P 2



(5S-FE) P 3



S10 BLUE

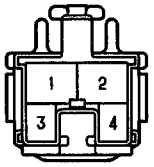

V 5 GRAY



SYSTEM OUTLINE

CURRENT IS APPLIED AT ALL TIMES THROUGH **STOP** FUSE TO **TERMINAL 1** OF THE CRUISE CONTROL ECU AND **TERMINAL 2** OF STOP LIGHT SW, AND ALSO THROUGH THE **STOP** FUSE TO **TERMINAL 15** OF CRUISE CONTROL ECU.

WITH THE IGNITION SW TURNED TO ON, THE CURRENT FLOWS THROUGH **GAUGE** FUSE TO **TERMINAL (A) 6** OF COMBINATION METER AND THE CURRENT THROUGH **ECU–IG** FUSE FLOWS TO **TERMINAL 14** OF CRUISE CONTROL ECU.

WHEN THE IGNITION SW IS ON AND THE CRUISE CONTROL MAIN SW IS TURNED ON, A SIGNAL IS INPUT FROM **TERMINAL 15** OF CRUISE CONTROL MAIN SW TO **TERMINAL 4** OF CRUISE CONTROL ECU. AS A RESULT, THE CRUISE CONTROL ECU FUNCTIONS AND THE CURRENT TO **TERMINAL 14** OF CRUISE CONTROL ECU TO **TERMINAL 13** OF CRUISE CONTROL ECU → **GROUND**, AND THE CRUISE CONTROL SYSTEM IS IN A CONDITION READY FOR OPERATION.

AT THE SAME TIME, THE CURRENT THROUGH THE **GAUGE** FUSE FLOWS FROM **TERMINAL (A) 6** OF CRUISE CONTROL INDICATOR LIGHT → **TERMINAL (B) 9** → **TERMINAL 5** OF CRUISE CONTROL ECU → **TERMINAL 13** → TO **GROUND**, CAUSING THE CRUISE CONTROL INDICATOR LIGHT TO LIGHT UP, INDICATING THAT THE CRUISE CONTROL IS READY FOR OPERATION.

1. SET OPERATION

WHEN THE CRUISE CONTROL MAIN SW IS TURNED ON AND THE SET SW IS TURNED ON WITH THE VEHICLE SPEED WITHIN THE SET LIMIT (APPROX. **40** KM/H, **25** MPH TO **200** KM/H, **124** MPH), A SIGNAL IS INPUT TO **TERMINAL 18** OF THE CRUISE CONTROL ECU AND THE VEHICLE SPEED AT THE TIME THE SET SW IS RELEASED IS MEMORIZED IN THE ECU AS THE SET SPEED.

2. SET SPEED CONTROL

DURING CRUISE CONTROL DRIVING, THE ECU COMPARES THE SET SPEED MEMORIZED IN THE ECU WITH THE ACTUAL VEHICLE SPEED INPUT INTO **TERMINAL 20** OF THE CRUISE CONTROL ECU FROM THE VEHICLE SPEED SENSOR (SPEED SENSOR), AND CONTROLS THE CRUISE CONTROL ACTUATOR TO MAINTAIN THE SET SPEED.

WHEN THE ACTUAL SPEED IS LOWER THAN THE SET SPEED, THE ECU CAUSES THE CURRENT TO THE CRUISE CONTROL ACTUATOR TO FLOW FROM **TERMINAL 12** → **TERMINAL 6** OF CRUISE CONTROL ACTUATOR → **TERMINAL 7** → **TERMINAL 11** OF CRUISE CONTROL ECU. AS A RESULT, THE MOTOR IN THE CRUISE CONTROL ACTUATOR IS ROTATED TO OPEN THE THROTTLE VALVE AND THE THROTTLE CABLE IS PULLED TO INCREASE THE VEHICLE SPEED. WHEN THE ACTUAL DRIVING SPEED IS HIGHER THAN THE SET SPEED, THE CURRENT TO CRUISE CONTROL ACTUATOR FLOWS FROM **TERMINAL 11** OF ECU → **TERMINAL 7** OF CRUISE CONTROL ACTUATOR → **TERMINAL 6** → **TERMINAL 12** OF CRUISE CONTROL ECU.

THIS CAUSES THE MOTOR IN THE CRUISE CONTROL ACTUATOR TO ROTATE TO CLOSE THE THROTTLE VALVE AND RETURN THE THROTTLE CABLE TO DECREASE THE VEHICLE SPEED.

3. COAST CONTROL

DURING THE CRUISE CONTROL DRIVING, WHILE THE COAST SW IS ON, THE CRUISE CONTROL ACTUATOR RETURNS THE THROTTLE CABLE TO CLOSE THE THROTTLE VALVE AND DECREASE THE DRIVING SPEED. THE VEHICLE SPEED WHEN THE COAST SW IS TURNED OFF IS MEMORIZED AND THE VEHICLE CONTINUES AT THE NEW SET SPEED.

4. ACCEL CONTROL

DURING CRUISE CONTROL DRIVING, WHILE THE ACCEL SW IS TURNED ON, THE CRUISE CONTROL ACTUATOR PULLS THE THROTTLE CABLE TO OPEN THE THROTTLE VALVE AND INCREASE THE DRIVING SPEED.

THE VEHICLE SPEED WHEN THE ACCEL SW IS TURNED OFF IS MEMORIZED AND THE VEHICLE CONTINUES AT THE NEW SET SPEED.

5. RESUME CONTROL

UNLESS THE VEHICLE SPEED FALLS BELOW THE MINIMUM SPEED LIMIT (APPROX. **40** KM/H, **25** MPH) AFTER CANCELING THE SET SPEED BY THE CANCEL SW, PUSHING THE RESUME SW WILL CAUSE THE VEHICLE TO RESUME THE SPEED SET BEFORE CANCELLATION.

6. MANUAL CANCEL MECHANISM

IF ANY OF THE FOLLOWING OPERATIONS OCCURS DURING CRUISE CONTROL OPERATION, CURRENT FLOW TO MAGNETIC CLUTCH OF THE ACTUATOR IS CUT TURNS OFF AND THE MOTOR ROTATES TO CLOSE THE THROTTLE VALVE AND THE CRUISE CONTROL IS RELEASED.

- PLACING THE SHIFT LEVER IN “N” POSITION (PARK/NEUTRAL POSITION SW (NEUTRAL START SW ON). “SIGNAL INPUT TO **TERMINAL 2** OF ECU” (A/T)
- DEPRESSING THE CLUTCH PEDAL (CLUCH SW ON). “SIGNAL INPUT TO **TERMINAL 2** OF THE ECU” (M/T)
- DEPRESSING THE BRAKE PEDAL (STOP LIGHT SW ON). “SIGNAL INPUT TO **TERMINAL 16** OF ECU”
- PUSH THE CANCEL SW (CANCEL SW ON). “SIGNAL INPUT TO **TERMINAL 18** OF ECU”
- DEPRESSING THE PARKING BRAKE PEDAL (PARKING BRAKE SW ON). “SIGNAL INPUT TO **TERMINAL 3** OF ECU” (3VZ–FE)
- PULLING THE PARKING BRAKE LEVER (PARKING BRAKE SW ON). “SIGNAL INPUT TO **TERMINAL 3** OF THE ECU” (5S–FE)

7. AUTO CANCEL FUNCTION

A) IF ANY OF THE FOLLOWING OPERATING CONDITIONS OCCURS DURING CRUISE CONTROL OPERATION, THE SET SPEED IS ERASED, CURRENT FLOW TO MAGNETIC CLUTCH IS CUT OFF AND THE CRUISE CONTROL IS RELEASED. (MAIN SW TURNS OFF).

WHEN THIS OCCURS, THE IGNITION SW MUST BE TURNED OFF ONCE BEFORE THE MAIN SW WILL TURN ON AGAIN.

- OVER CURRENT TO TRANSISTOR DRIVING MOTOR AND/OR MAGNETIC CLUTCH.
- WHEN CURRENT CONTINUED TO FLOW TO THE MOTOR INSIDE THE ACTUATOR IN THE THROTTLE VALVE “OPEN” DIRECTION.
- OPEN CIRCUIT IN MOTOR AND/OR MAGNETIC CLUTCH.
- MOMENTARY INTERRUPTION OF VEHICLE SPEED SIGNAL.
- SHORT CIRCUIT IN CRUISE CONTROL SW.
- MOTOR DOES NOT OPERATE DESPITE THE MOTOR DRIVE SIGNAL BEING OUTPUT.

B) IF ANY OF THE FOLLOWING CONDITIONS OCCURS DURING CRUISE CONTROL OPERATION, THE SET SPEED IS ERASED AND THE CRUISE CONTROL IS RELEASED. CURRENT FLOW TO MAGNETIC CLUTCH IS CUT OFF UNTIL THE SET SW IS “ON” AGAIN.)

- WHEN THE VEHICLE SPEED HAS FALLEN BELOW THE MINIMUM SPEED LIMIT, APPROX. **40** KM/H (**25** MPH)
- WHEN THE VEHICLE SPEED HAS FALLEN MORE THAN **16** KM/H (**10** MPH) BELOW THE SET SPEED, E.G. ON AN UPWARD SLOPE.
- WHEN POWER TO THE CRUISE CONTROL SYSTEM IS MOMENTARILY CUT OFF.

C) IF ANY OF THE FOLLOWING CONDITIONS OCCURS DURING CRUISE CONTROL OPERATION, THE CRUISE CONTROL IS RELEASED.

- OPEN CIRCUIT FOR **TERMINAL 1** OF CRUISE CONTROL ECU.

8. AUTOMATIC TRANSMISSION CONTROL FUNCTION

- IN OVERDRIVE. IF THE VEHICLE SPEED BECOMES LOWER THAN THE OVERDRIVE CUT SPEED (SET SPEED MINUS APPROX. **4** KM/H, **2.5** MPH) DURING CRUISE CONTROL OPERATION, SUCH AS DRIVING UP A HILL, THE OVERDRIVE IS RELEASED AND THE POWER INCREASED TO PREVENT A REDUCTION IN VEHICLE SPEED.
- AFTER RELEASING THE OVERDRIVE, IF VEHICLE SPEED BECOMES HIGHER THAN THE OVERDRIVE RETURN SPEED (SET SPEED MINUS APPROX. **2** KM/H, **1.2** MPH) AND THE ECU JUDGES BY THE SIGNALS FROM POTENTIOMETER OF THE ACTUATOR THAT THE UPWARD SLOPE HAS FINISHED, OVERDRIVE IS RESUMED AFTER A WHILE.

SERVICE HINTS

C 2 CRUISE CONTROL ACTUATOR

1–3 : APPROX. **2** K
5–4 : APPROX. **38**

C13 CRUISE CNTROL SW MAIN [COMB. SW]

15–20 : CONTINUITY WITH MAIN SW ON
20–17 : APPROX. **418** WITH CANCEL SW ON
APPROX. **68** WITH RESUME/ACCEL SW ON
APPROX. **198** WITH SET/COAST SW ON

C16 CRUISE CONTROL ECU

14–GROUND : APPROX. **12** VOLTS WITH IGNITION SW AT **ON** POSITION
1,15–GROUND : ALWAYS APPROX. **12** VOLTS
3–GROUND : CONTINUITY WITH PARKING BRAKE SW ON (ONE OF THE CANCEL SW) OR BRAKE LEVEL WARNING SW ON
20–GROUND : **4** PULSE WITH **1** ROTATION OF ROTOR SHAFT
18–GROUND : APPROX. **418** WITH CANCEL SW ON IN CONTROL SW
APPROX. **68** WITH RES/ACC SW ON IN CONTROL SW
APPROX. **198** WITH SET/COAST SW ON IN CONTROL SW
13–GROUND : ALWAYS CONTINUITY
2–GROUND : CONTINUITY WITH SHIFT LEVER AT **N** POSITION (A/T) OR CLUTCH PEDAL DEPRESSED (M/T)

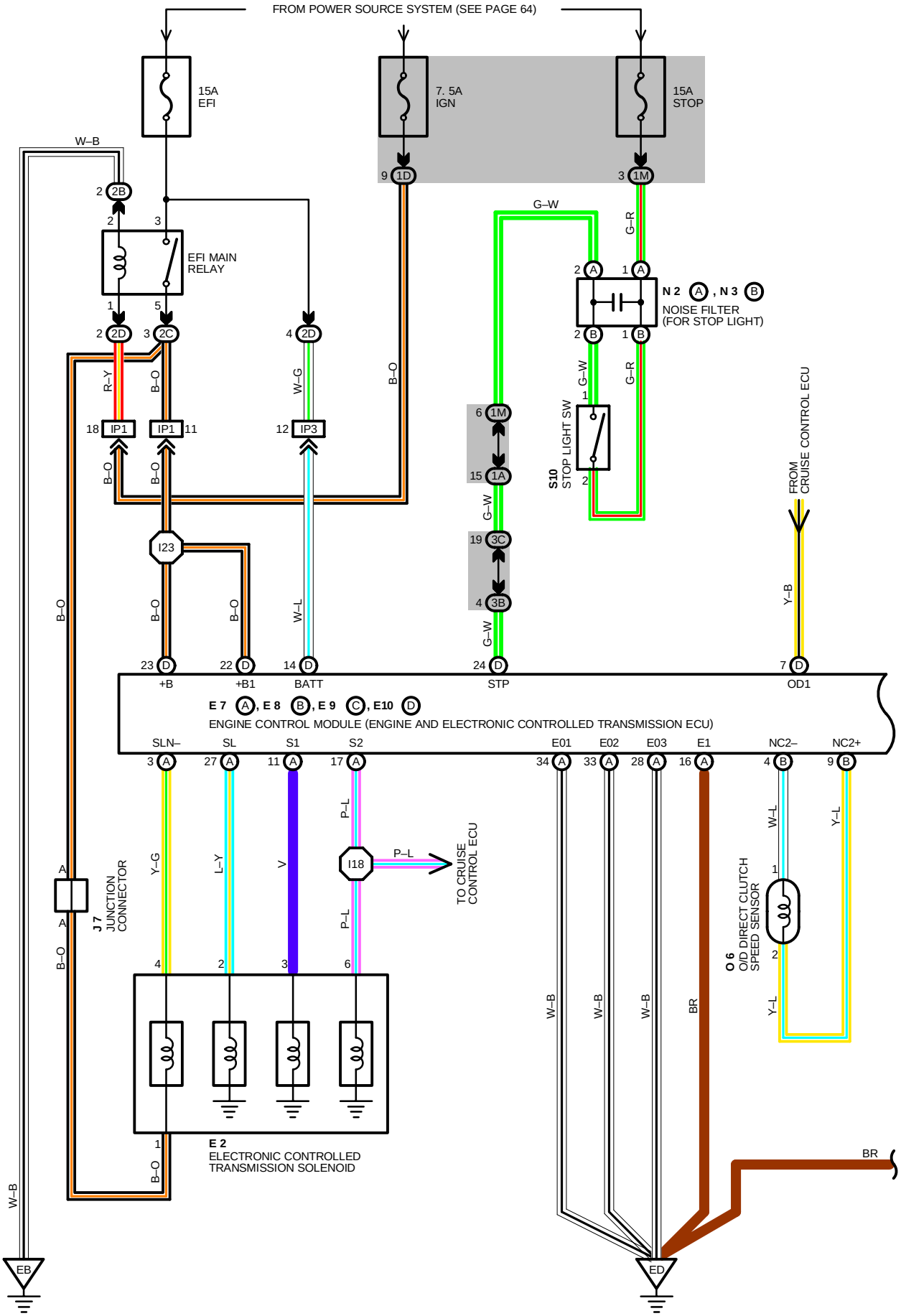
FROM POWER SOURCE SYSTEM (SEE PAGE 64)
15A EFI
7. 5A IGN
15A STOP
W–B
EFI MAIN RELAY
N2 A , N3 B
NOISE FILTER (FOR STOP LIGHT)
G–W
G–R
R–Y
B–O
W–G
W–L
S10 STOP LIGHT SW
FROM CRUISE CONTROL ECU
Y–B
I23
+B
+B1
BATT
STP
OD1
E7 A, E8 B, E9 C, E10 D
ENGINE CONTROL MODULE (ENGINE AND ELECTRONIC CONTROLLED TRANSMISSION ECU)
SLN–
SL
S1
S2
E01
E02
E03
E1
NC2–
NC2+
J7 JUNCTION CONNECTOR
Y–G
L–Y
V
P–L
I18
TO CRUISE CONTROL ECU
O6 O/D DIRECT CLUTCH SPEED SENSOR
Y–L
BR
E2 ELECTRONIC CONTROLLED TRANSMISSION SOLENOID
EB
ED

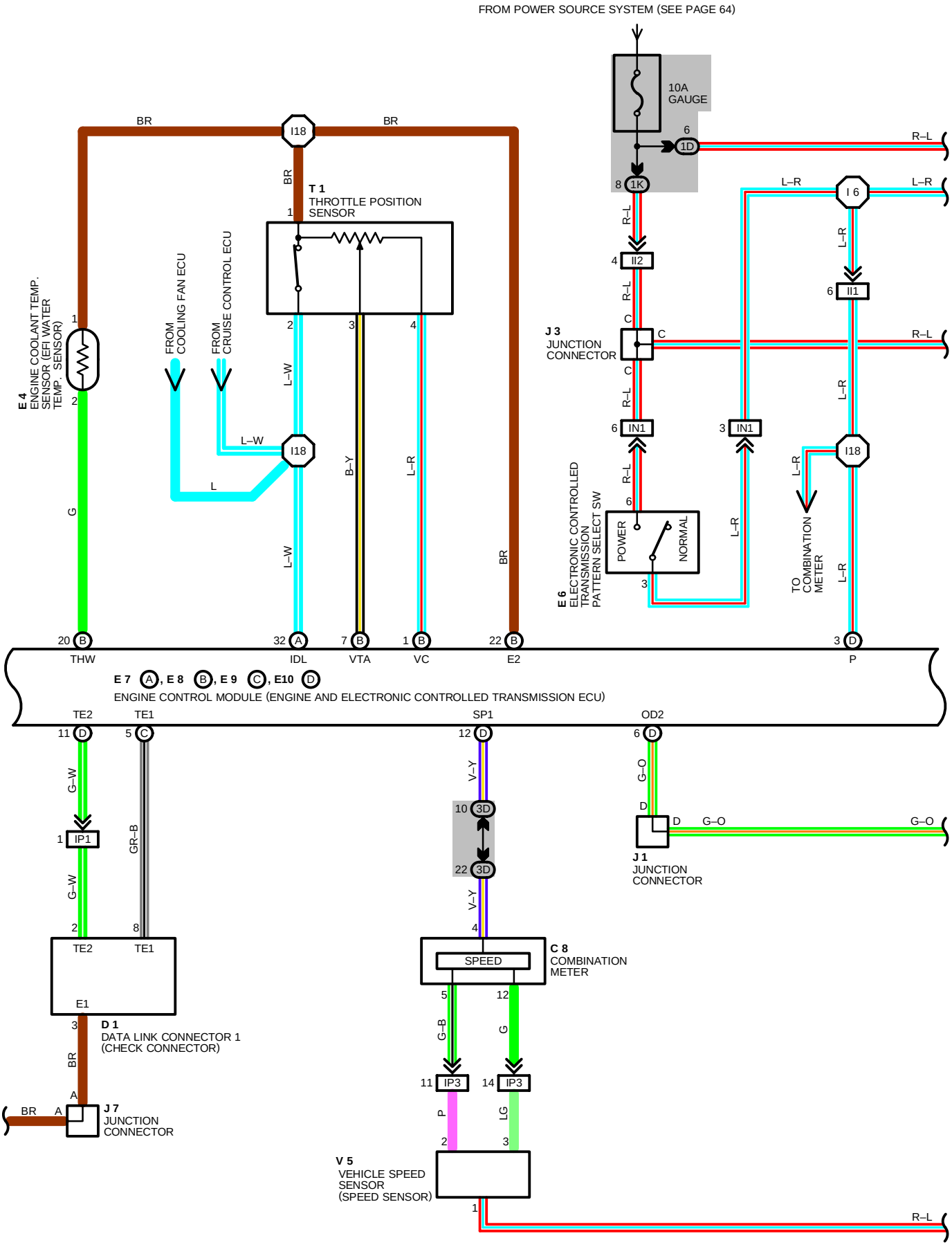
FROM POWER SOURCE SYSTEM (SEE PAGE 64)
10A GAUGE
6 1D
R–L
8 1K
L–R
I 6
4 II2
6 II1
J 3 JUNCTION CONNECTOR
C
6 IN1
3 IN1
E 6 ELECTRONIC CONTROLLED TRANSMISSION PATTERN SELECT SW
POWER
NORMAL
TO COMBINATION METER
BR
I18
T 1 THROTTLE POSITION SENSOR
E 4 ENGINE COOLANT TEMP. SENSOR (EFI WATER TEMP. SENSOR)
FROM COOLING FAN ECU
FROM CRUISE CONTROL ECU
L–W
B–Y
L–R
L
G
20 B THW
32 A IDL
7 B VTA
1 B VC
22 B E2
3 D P
E 7 A, E 8 B, E 9 C, E10 D
ENGINE CONTROL MODULE (ENGINE AND ELECTRONIC CONTROLLED TRANSMISSION ECU)
TE2
TE1
SP1
OD2
11 D
5 C
12 D
6 D
G–W
GR–B
V–Y
G–O
1 IP1
10 3D
22 3D
D
D G–O G–O
J 1 JUNCTION CONNECTOR
2 TE2 8 TE1
E1
3
D 1 DATA LINK CONNECTOR 1 (CHECK CONNECTOR)
BR
A
BR A
J 7 JUNCTION CONNECTOR
SPEED
C 8 COMBINATION METER
5 12
G–B G
11 IP3 14 IP3
P LG
2 3
V 5 VEHICLE SPEED SENSOR (SPEED SENSOR)
1
R–L

ELECTRONIC CONTROLLED TRANSMISSION AND A/T INDICATOR (1MZ–FE)

*1 : W/ A/T INDICATOR LIGHT

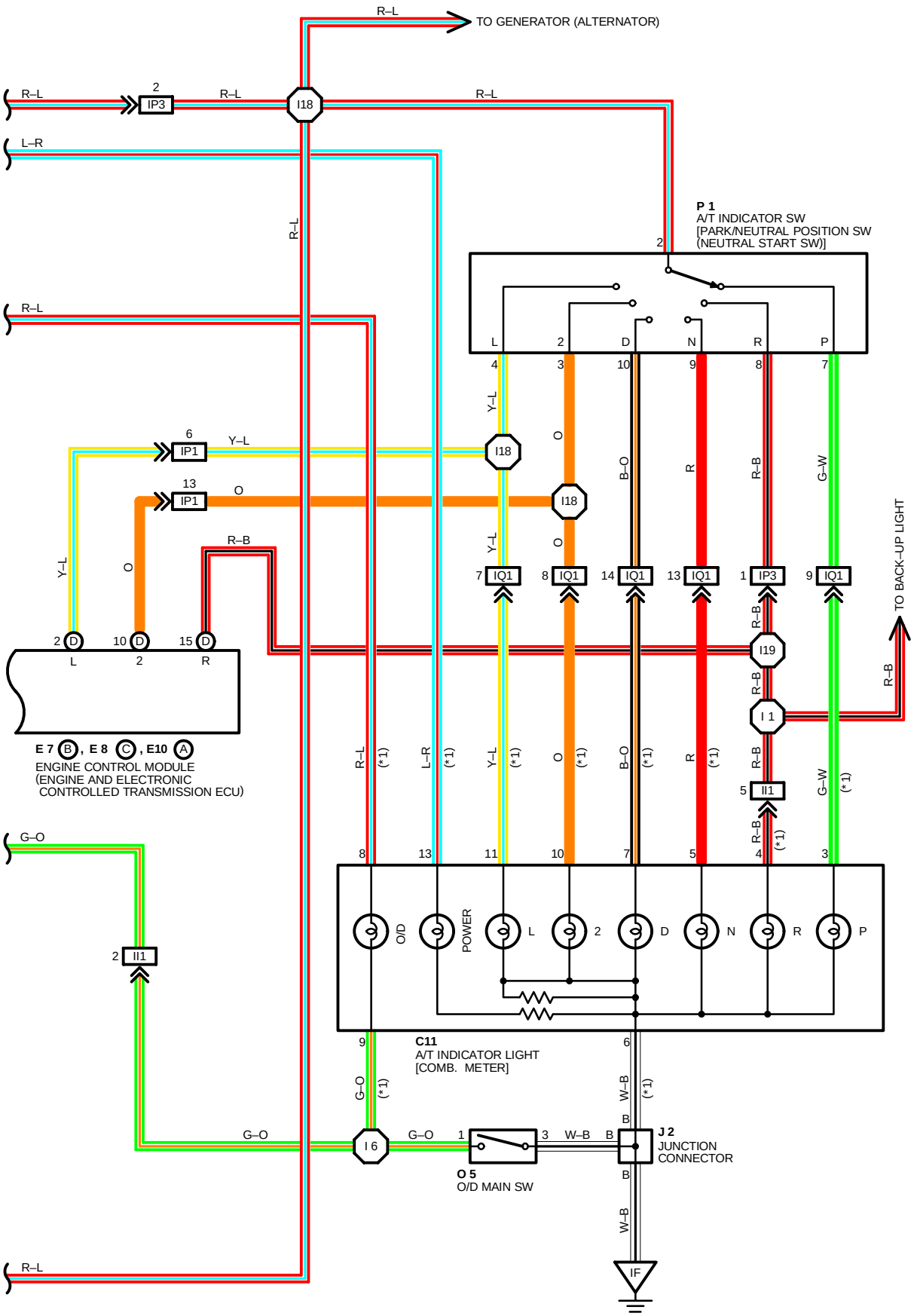

SYSTEM OUTLINE

PREVIOUS AUTOMATIC TRANSMISSIONS HAVE SELECTED EACH GEAR SHIFT USING MECHANICALLY CONTROLLED THROTTLE HYDRAULIC PRESSURE, GOVERNOR HYDRAULIC PRESSURE AND LOCK–UP HYDRAULIC PRESSURE. THE ELECTRONIC CONTROLLED TRANSMISSION, HOWEVER, ELECTRICALLY CONTROLS THE LINE PRESSURE AND LOCK–UP PRESSURE ETC., THROUGH THE SOLENOID VALVE. ENGINE CONTROL MODULE (ENGINE AND ELECTRONIC CONTROLLED TRANSMISSION ECU) CONTROL OF THE SOLENOID VALVE BASED ON THE INPUT SIGNALS FROM EACH SENSOR MAKES SMOOTH DRIVING POSSIBLE BY SHIFT SELECTION FOR EACH GEAR WHICH IS MOST APPROPRIATE TO THE DRIVING CONDITIONS AT THAT TIME.

1. GEAR SHIFT OPERATION

DURING DRIVING, THE ENGINE CONTROL MODULE (ECU) SELECTS THE SHIFT FOR EACH GEAR WHICH IS MOST APPROPRIATE TO THE DRIVING CONDITIONS, BASED ON INPUT SIGNALS FROM THE ENGINE COOLANT TEMP. SENSOR (EFI WATER TEMP. SENSOR) TO **TERMINAL THW** OF THE ENGINE CONTROL MODULE (ECU), AND ALSO THE INPUT SIGNALS TO **TERMINAL NC2+** OF THE ENGINE CONTROL MODULE (ECU) FROM THE VEHICLE SPEED SENSOR (SPEED SENSOR) DEVOTED TO THE ELECTRONIC CONTROLLED TRANSMISSION. CURRENT IS THEN OUTPUT TO THE ELECTRONIC CONTROLLED TRANSMISSION SOLENOIDS. WHEN SHIFTING TO 1ST SPEED, CURRENT FLOWS FROM **TERMINAL S1** OF THE ENGINE CONTROL MODULE (ECU) → **TERMINAL 3** OF THE ELECTRONIC CONTROLLED TRANSMISSION SOLENOIDS → **GROUND**, AND CONTINUITY TO THE NO. 1 SOLENOID CAUSES THE SHIFT.

FOR 2ND SPEED, CURRENT FLOWS FROM **TERMINAL S1** OF THE ENGINE CONTROL MODULE (ECU) → **TERMINAL 3** OF THE ELECTRONIC CONTROLLED TRANSMISSION SOLENOIDS → **GROUND**, AND FROM **TERMINAL S2** OF THE ENGINE CONTROL MODULE (ECU) → **TERMINAL 1** OF THE ELECTRONIC CONTROLLED TRANSMISSION SOLENOIDS → **GROUND**, AND CONTINUITY TO SOLENOIDS NO. 1 AND NO. 2 CAUSES THE SHIFT.

FOR 3RD SPEED, THERE IS NO CONTINUITY TO NO. 1 SOLENOID, ONLY TO NO. 2, CAUSING THE SHIFT.

SHIFTING INTO 4TH SPEED (OVERDRIVE) TAKES PLACE WHEN THERE IS NO CONTINUITY TO EITHER NO. 1 OR NO. 2 SOLENOID.

2. LOCK–UP OPERATION

WHEN THE ENGINE CONTROL MODULE (ECU) JUDGES FROM EACH SIGNAL THAT LOCK–UP OPERATION CONDITIONS HAVE BEEN MET, CURRENT FLOWS FROM **TERMINAL SL** OF THE ENGINE CONTROL MODULE (ECU) → **TERMINAL 2** OF THE ELECTRONIC CONTROLLED TRANSMISSION SOLENOID → **GROUND**, CAUSING CONTINUITY TO THE LOCK–UP SOLENOID AND CAUSING LOCK–UP OPERATION.

3. STOP LIGHT SW CIRCUIT

IF THE BRAKE PEDAL IS DEPRESSED (STOP LIGHT SW ON) WHEN DRIVING IN LOCK–UP CONDITION, A SIGNAL IS INPUT TO **TERMINAL STP** OF THE ENGINE CONTROL MODULE (ECU), THE ENGINE CONTROL MODULE (ECU) OPERATES AND CONTINUITY TO THE LOCK–UP SOLENOID IS CUT.

4. OVERDRIVE CIRCUIT

***** O/D MAIN SW ON

WHEN THE O/D MAIN SW IS TURNED ON (O/D OFF INDICATOR LIGHT TURNS OFF), A SIGNAL IS INPUT TO **TERMINAL OD2** OF THE ENGINE CONTROL MODULE (ECU) AND ENGINE CONTROL MODULE (ECU) OPERATION CAUSES GEAR SHIFT WHEN THE CONDITIONS FOR OVERDRIVE ARE MET.

***** O/D MAIN SW OFF

WHEN THE O/D MAIN SW IS TURNED TO OFF, THE CURRENT FLOWING THROUGH THE O/D OFF INDICATOR LIGHT FLOWS THROUGH THE O/D MAIN SW TO GROUND. CAUSING THE INDICATOR LIGHT TO LIGHT UP. AT THE SAME TIME, A SIGNAL IS INPUT TO **TERMINAL OD2** OF THE ENGINE CONTROL MODULE (ECU) AND ENGINE CONTROL MODULE (ECU) OPERATION PREVENTS SHIFT INTO OVERDIRVE.

5. ELECTRONIC CONTROLLED TRANSMISSION PATTERN SELECT SW CIRCUIT

IF THE ELECTRONIC CONTROLLED TRANSMISSION PATTERN SELECT SW IS CHANGED FROM NORMAL TO POWER, THE CURRENT FLOWING THROUGH THE POWER INDICATOR FLOWS TO **GROUND**, CURRENT FLOWS TO **TERMINAL P** OF THE ENGINE CONTROL MODULE (ECU), THE ENGINE CONTROL MODULE (ECU) OPERATES, AND SHIFT UP AND SHIFT DOWN OCCUR AT HIGHER VEHICLE SPEEDS THAN WHEN THE SW IS IN **NORMAL** POSITION.

ELECTRONIC CONTROLLED TRANSMISSION AND A/T INDICATOR (1MZ–FE)

SERVICE HINTS

E 7(B), E 8 (C), E10(A) ENGINE CONTROL MODULE (ENGINE AND ELECTRONIC CONTROLLED TRANSMISSION ECU) (TURN ON THE IGNTION SW)

S1, S2– E1 : **9.0–14.0** VOLTS WITH SOLENOID ON
0–1.5 VOLTS WITH SOLENOID OFF
P– E1 : **7.5–14.0** VOLTS WITH IGNITION SW ON AND PATTERN SELECT SW AT **POWER** POSITION
L– E1 : **7.5–14.0** VOLTS WITH SHIFT LEVER AT **L** POSITION
2– E1 : **7.5–14.0** VOLTS WITH SHIFT LEVER AT **2** POSITION
R– E1 : **7.5–14.0** VOLTS WITH SHIFT LEVER AT **R** POSITION
STP– E1 : **9.0–14.0** VOLTS WITH BRAKE PEDAL DEPRESSED
THW– E2 : **0.2–1.0** VOLTS WITH WITH ENGINE COOLANT TEMP. **60˚C (140˚F) –120˚C (248˚F)**
IDL– E2 : **0–1.5** VOLTS WITH THROTTLE VALVE FULLY CLOSED
9.0–14.0 VOLTS WITH THROTTLE VALVE FULLY OPENED
VTA–E2 : **0.3–0.8** VOLTS WITH THROTTLE VALVE FULLY CLOSED
3.2–4.9 VOLTS WITH THROTTLE VALVE FULLY OPENED
VC– E2 : **4.5–5.5** VOLTS WITH IGNITION SW AT **ON** POSITION
OD1– E1 : **4.5–5.5** VOLTS WITH IGNITION SW AT **ON** POSITION
OD2– E1 : **9.0–14.0** VOLTS WITH O/D MAIN SW TURNED OFF
0–3.0 VOLTS WITH O/D MAIN SW TURNED ON
IGSW– E1 : **9.0–14.0** VOLTS WITH IGNITION SW AT **O**N POSITION
+B– E1 : **9.0–14.0** VOLTS WITH IGNITION SW AT **ON** POSITION
+B1– E1 : **9.0–14.0** VOLTS WITH IGNITION SW AT **ON** POSITION

E 2 ELECTRONIC CONTROLLED TRANSMISSION SOLENOID
1, 2, 6–GROUND : EACH **11–15** Ω

O 5 O/D MAIN SW
1–3 : CLOSED WITH O/D MAIN SW OFF, OPEN WITH O/D MAIN SW ON

: PARTS LOCATION

CODE	SEE PAGE	CODE	SEE PAGE	CODE	SEE PAGE
C 8	32	**E 9** C	32	**O 5**	33
C11	32	**E10** D	32	**O 6**	29
D 1	28	**J 1**	33	**P 1**	29
E 2	28	**J 2**	33	**S10**	33
E 4	28	**J 3**	33	**T 1**	29
E 6	32	**J 7**	33	**V 5**	29
E 7 A	32	**N 2** A	33		
E 8 B	32	**N 3** B	33		

: JUNCTION BLOCK AND WIRE HARNESS CONNECTOR

CODE	SEE PAGE	JUNCTION BLOCK AND WIRE HARNESS (CONNECTOR LOCATION)
1A	20	COWL WIRE AND J/B NO. 1 (INSTRUMENT PANEL LEFT)
1D		
1K		
1M		
2B	22	ENGINE ROOM MAIN WIRE AND J/B NO. 2 (ENGINE COMPARTMENT LEFT)
2C	22	ENGINE WIRE AND J/B NO. 2 (ENGINE COMPARTMENT LEFT)
2D		
3B	24	COWL WIRE AND J/B NO. 3 (BEHIND COMBINATION METER)
3C		
3D		

: CONNECTOR JOINING WIRE HARNESS AND WIRE HARNESS

CODE	SEE PAGE	JOINING WIRE HARNESS AND WIRE HARNESS (CONNECTOR LOCATION)
II1	42	COWL WIRE AND INSTRUMENT PANEL WIRE
II2	42	INSTRUMENT PANEL WIRE AND COWL WIRE
IN1	42	INSTRUMENT PANEL WIRE AND SWITCH WIRE
IP1	44	ENGINE WIRE AND COWL WIRE
IP3		
IQ1	44	ENGINE WIRE AND INSTRUMENT PANEL WIRE

: GROUND POINTS

CODE	SEE PAGE	GROUND POINTS LOCATION
EB	38 (1MZ–FE)	FRONT LEFT FENDER
ED	38 (1MZ–FE)	INTAKE MANIFOLD LH
IF	42	LEFT KICK PANEL

: SPLICE POINTS

CODE	SEE PAGE	WIRE HARNESS WITH SPLICE POINTS	CODE	SEE PAGE	WIRE HARNESS WITH SPLICE POINTS
I 1	44	COWL WIRE	I19	44	COWL WIRE
I 6	44	INSTRUMENT PANEL WIRE	I23		
I18	44	ENGINE WIRE			

C 8 BLUE

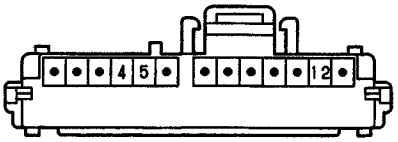

C11 BROWN

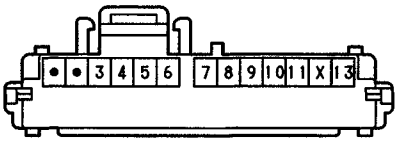

D 1 BLACK

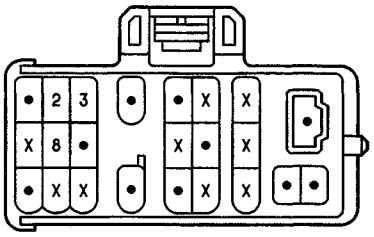

E 2 GRAY

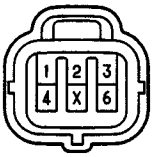

E 4 DARK GRAY



E 6 BLACK



E 7 (A) DARK GRAY

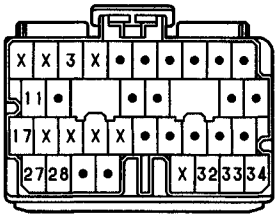

E 8 (B) DARK GRAY

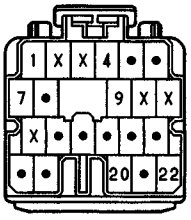

E 9 (C) DARK GRAY

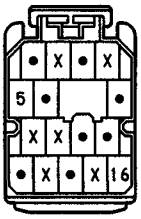

E10 (D) DARK GRAY

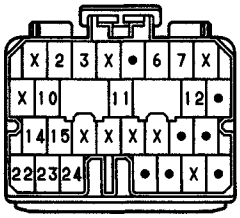

J 1 DARK GRAY

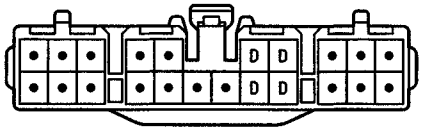

(HINT:SEE PAGE 7)

J 2

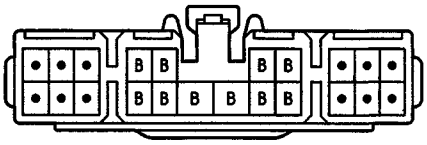

(HINT:SEE PAGE 7)

J 3

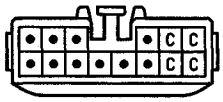

(HINT:SEE PAGE 7)

J 7 BLUE



(HINT:SEE PAGE 7)

N 2 (A)

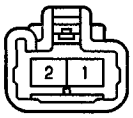

N 3 (B)

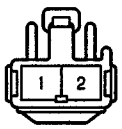

O 5 BLUE



O 6 BLACK



P 1 GRAY

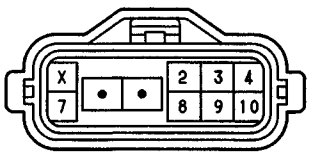

S10 BLUE

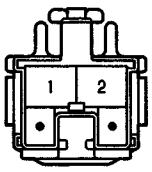

T 1 BLACK



V 5 GRAY



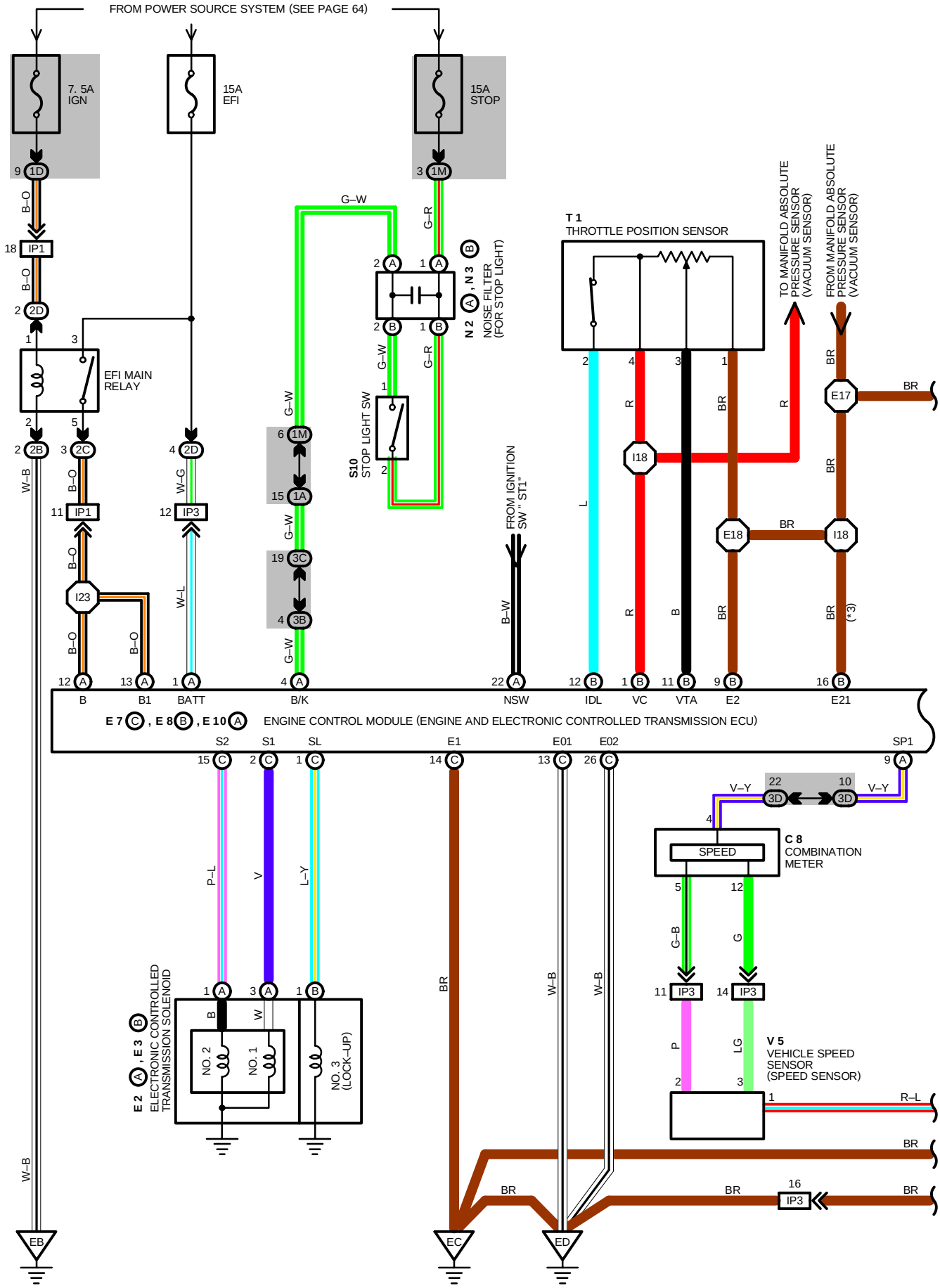
FROM POWER SOURCE SYSTEM (SEE PAGE 64)
7. 5A IGN
15A EFI
15A STOP
EFI MAIN RELAY
NOISE FILTER (FOR STOP LIGHT)
N 2 , N 3
STOP LIGHT SW
S10
T 1
THROTTLE POSITION SENSOR
TO MANIFOLD ABSOLUTE PRESSURE SENSOR (VACUUM SENSOR)
FROM MANIFOLD ABSOLUTE PRESSURE SENSOR (VACUUM SENSOR)
FROM IGNITION SW "ST1"
B
B1
BATT
B/K
NSW
IDL
VC
VTA
E2
E21
E 7 , E 8 , E 10
ENGINE CONTROL MODULE (ENGINE AND ELECTRONIC CONTROLLED TRANSMISSION ECU)
S2
S1
SL
E1
E01
E02
SP1
E 2 , E 3
ELECTRONIC CONTROLLED TRANSMISSION SOLENOID
NO. 2
NO. 1
NO. 3 (LOCK–UP)
C 8
COMBINATION METER
SPEED
V 5
VEHICLE SPEED SENSOR (SPEED SENSOR)
EB
EC
ED

*1 : W/ A/T INDICATOR LIGHT
*2 : W/O A/T INDICATOR LIGHT
*3 : EX. CALIFORNIA

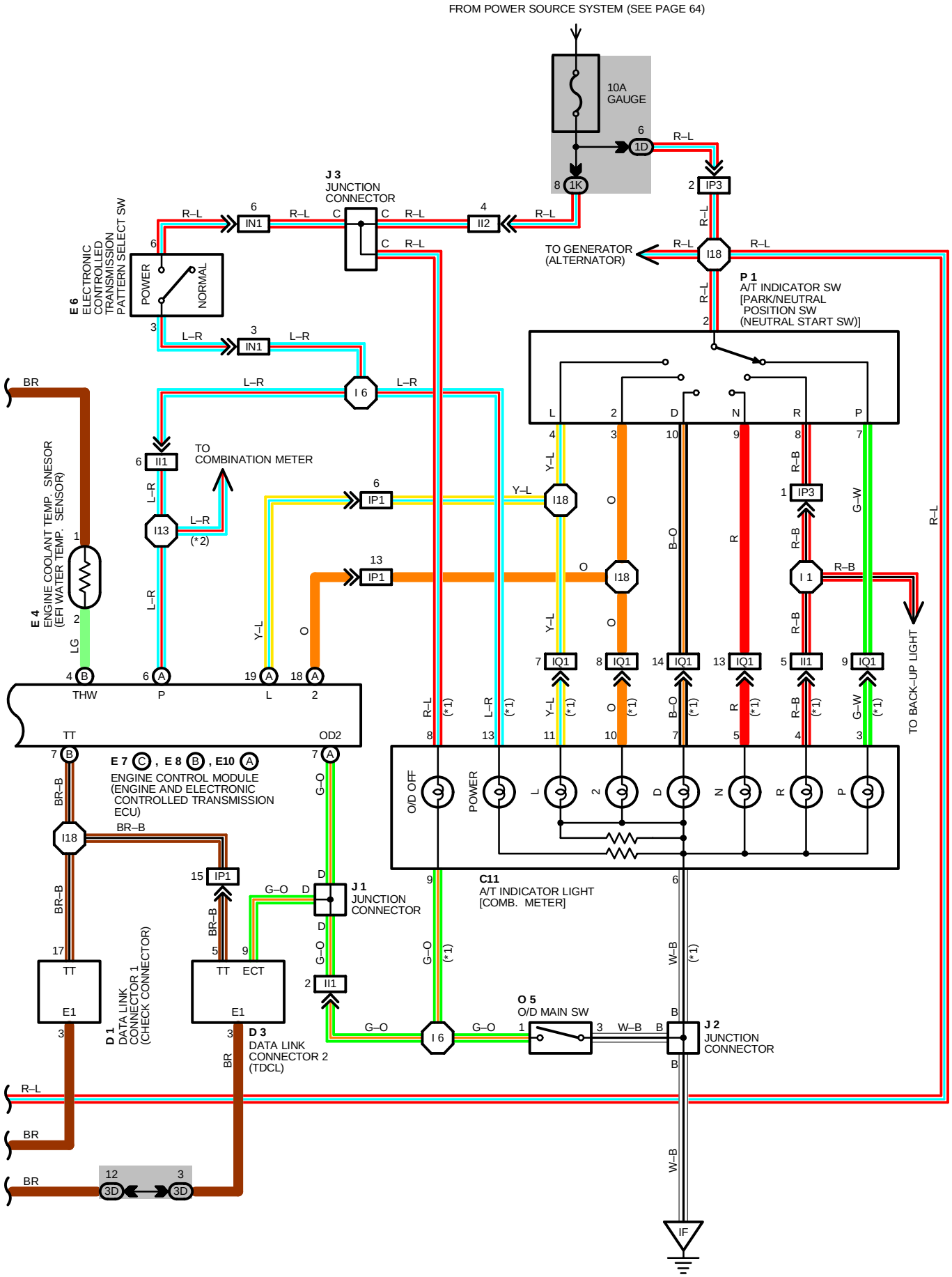

SYSTEM OUTLINE

PREVIOUS AUTOMATIC TRANSMISSIONS HAVE SELECTED EACH GEAR SHIFT USING MECHANICALLY CONTROLLED THROTTLE HYDRAULIC PRESSURE, GOVERNOR HYDRAULIC PRESSURE AND LOCK–UP HYDRAULIC PRESSURE. THE ELECTRONIC CONTROLLED TRANSMISSION, HOWEVER, ELECTRICALLY CONTROLS THE LINE PRESSURE AND LOCK–UP PRESSURE ETC., THROUGH THE SOLENOID VALVE. ENGINE CONTROL MODULE (ENGINE AND ELECTRONIC CONTROLLED TRANSMISSION ECU) CONTROL OF THE SOLENOID VALVE BASED ON THE INPUT SIGNALS FROM EACH SENSOR MAKES SMOOTH DRIVING POSSIBLE BY SHIFT SELECTION FOR EACH GEAR WHICH IS MOST APPROPRIATE TO THE DRIVING CONDITIONS AT THAT TIME.

1. GEAR SHIFT OPERATION

DURING DRIVING, THE ENGINE CONTROL MODULE (ECU) SELECTS THE SHIFT FOR EACH GEAR WHICH IS MOST APPROPRIATE TO THE DRIVING CONDITIONS, BASED ON INPUT SIGNALS FROM THE ENGINE COOLANT TEMP. SENSOR (EFI WATER TEMP. SENSOR) TO **TERMINAL THW** OF THE ENGINE CONTROL MODULE (ECU), AND ALSO THE INPUT SIGNALS TO **TERMINAL SP1** OF THE ENGINE CONTROL MODULE (ECU) FROM THE VEHICLE SPEED SENSOR (SPEED SENSOR) DEVOTED TO THE ELECTRONIC CONTROLLED TRANSMISSION. CURRENT IS THEN OUTPUT TO THE ELECTRONIC CONTROLLED TRANSMISSION SOLENOIDS. WHEN SHIFTING TO 1ST SPEED, CURRENT FLOWS FROM **TERMINAL S1** OF THE ENGINE CONTROL MODULE (ECU) → **TERMINAL (A)3** OF THE ELECTRONIC CONTROLLED TRANSMISSION SOLENOIDS → **GROUND**, AND CONTINUITY TO THE NO. 1 SOLENOID CAUSES THE SHIFT.

FOR 2ND SPEED, CURRENT FLOWS FROM **TERMINAL S1** OF THE ENGINE CONTROL MODULE (ECU) → **TERMINAL (A)3** OF THE ELECTRONIC CONTROLLED TRANSMISSION SOLENOIDS → **GROUND**, AND FROM **TERMINAL S2** OF THE ENGINE CONTROL MODULE (ECU) → **TERMINAL (A)1** OF THE ELECTRONIC CONTROL TRANSMISSION SOLENOIDS → **GROUND**, AND CONTINUITY TO SOLENOIDS NO. 1 AND NO. 2 CAUSES THE SHIFT.

FOR 3RD SPEED, THERE IS NO CONTINUITY TO NO. 1 SOLENOID, ONLY TO NO. 2, CAUSING THE SHIFT.

SHIFTING INTO 4TH SPEED (OVERDRIVE) TAKES PLACE WHEN THERE IS NO CONTINUITY TO EITHER NO. 1 OR NO. 2 SOLENOID.

2. LOCK–UP OPERATION

WHEN THE ENGINE CONTROL MODULE (ECU) JUDGES FROM EACH SIGNAL THAT LOCK–UP OPERATION CONDITIONS HAVE BEEN MET, CURRENT FLOWS FROM **TERMINAL SL** OF THE ENGINE CONTROL MODULE (ECU) → **TERMINAL (B)1** OF THE ELECTRONIC CONTROLLED TRANSMISSION SOLENOID → **GROUND**, CAUSING CONTINUITY TO THE LOCK–UP SOLENOID AND CAUSING LOCK–UP OPERATION.

3. STOP LIGHT SW CIRCUIT

IF THE BRAKE PEDAL IS DEPRESSED (STOP LIGHT SW ON) WHEN DRIVING IN LOCK–UP CONDITION, A SIGNAL IS INPUT TO **TERMINAL B/K** OF THE ENGINE CONTROL MODULE (ECU), THE ENGINE CONTROL MODULE (ECU) OPERATES AND CONTINUITY TO THE LOCK–UP SOLENOID IS CUT.

4. OVERDRIVE CIRCUIT

***** O/D MAIN SW ON

WHEN THE O/D MAIN SW IS TURNED ON (O/D OFF INDICATOR LIGHT TURNS OFF), A SIGNAL IS INPUT TO **TERMINAL OD2** OF THE ENGINE CONTROL MODULE (ECU) AND ENGINE CONTROL MODULE (ECU) OPERATION CAUSES GEAR SHIFT WHEN THE CONDITIONS FOR OVERDRIVE ARE MET.

***** O/D MAIN SW OFF

WHEN THE O/D MAIN SW IS TURNED TO OFF, THE CURRENT FLOWING THROUGH THE O/D OFF INDICATOR LIGHT FLOWS THROUGH THE O/D MAIN SW TO GROUND. CAUSING THE INDICATOR LIGHT TO LIGHT UP. AT THE SAME TIME, A SIGNAL IS INPUT TO **TERMINAL OD2** OF THE ENGINE CONTROL MODULE (ECU) AND ENGINE CONTROL MODULE (ECU) OPERATION PREVENTS SHIFT INTO OVERDRIVE.

5. ELECTRONIC CONTROLLED TRANSMISSION PATTERN SELECT SW CIRCUIT

IF THE ELECTRONIC CONTROLLED TRANSMISSION PATTERN SELECT SW IS CHANGED FROM NORMAL TO POWER, THE CURRENT FLOWING THROUGH THE POWER INDICATOR FLOWS TO **GROUND**, CURRENT FLOWS TO **TERMINAL P** OF THE ENGINE CONTROL MODULE (ECU), THE ENGINE CONTROL MODULE (ECU) OPERATES, AND SHIFT UP AND SHIFT DOWN OCCUR AT HIGHER VEHICLE SPEEDS THAN WHEN THE SW IS IN **NORMAL** POSITION.

SERVICE HINTS

E 7(C), E 8 (B), E10(A) ENGINE CONTROL MODULE (ENGINE AND ELECTRONIC CONTROLLED TRANSMISSION ECU) (TURN ON THE IGNTION SW)

S1, S2 –E1 : 9.0–14.0 VOLTS WITH SOLENOID ON
0–1.5 VOLTS WITH SOLENOID OFF

P –E1 : **7.5–14.0** VOLTS WITH IGNITION SW ON AND PATTERN SELECT SW AT **POWER** POSITION

L– E1 : **7.5–14.0** VOLTS WITH SHIFT LEVER AT **L** POSITION

2– E1 : **7.5–14.0** VOLTS WITH SHIFT LEVER AT **2** POSITION

R– E1 : **7.5–14.0** VOLTS WITH SHIFT LEVER AT **R** POSITION

B/K– E1 : **9.0–14.0** VOLTS WITH BRAKE PEDAL DEPRESSED

THW– E2 : **0.2–1.0** VOLTS WITH WITH ENGINE COOLANT TEMP. **60˚C (140˚F) –120˚C (248˚F)**

IDL– E2 : **0–1.5** VOLTS WITH THROTTLE VALVE FULLY CLOSED
9.0–14.0 VOLTS WITH THROTTLE VALVE FULLY OPENED

SERVICE HINTS

VTA–E2 : **0.3–0.8** VOLTS WITH THROTTLE VALVE FULLY CLOSED
3.2–4.9 VOLTS WITH THROTTLE VALVE FULLY OPENED
VC– E2 : **4.5–5.5** VOLTS WITH IGNITION SW AT **ON** POSITION
OD2– E1 : **9.0–14.0** VOLTS WITH O/D MAIN SW TURNED ON
0–3.0 VOLTS WITH O/D MAIN SW TURNED OFF
IGSW– E1 : **9.0–14.0** VOLTS WITH IGNITION SW AT **ON** POSITION
+B– E1 : **9.0–14.0** VOLTS WITH IGNITION SW AT **ON** POSITION
+B1– E1 : **9.0–14.0** VOLTS WITH IGNITION SW AT **ON** POSITION
M–REL– E1 : **9.0–14.0** VOLTS WITH IGNITION SW AT **ON** POSITION

E 2(A), E 3(B) ELECTRONIC CONTROLLED TRANSMISSION SOLENOID
(A)1, **(A)**3, **(B)**1–GROUND : EACH **11–15** Ω

O 5 O/D MAIN SW
1–3 : CLOSED WITH O/D MAIN SW OFF, OPEN WITH O/D MAIN SW ON

: PARTS LOCATION

CODE	SEE PAGE	CODE	SEE PAGE	CODE	SEE PAGE
C 8	32	**E 6**	32	**N 2** A	33
C11	32	**E 7** C	32	**N 3** B	33
D 1	30	**E 8** B	32	**O 5**	33
D 3	32	**E10** A	32	**P 1**	31
E 2 A	30	**J 1**	33	**S10**	33
E 3 B	30	**J 2**	33	**T 1**	31
E 4	30	**J 3**	33	**V 5**	31

: JUNCTION BLOCK AND WIRE HARNESS CONNECTOR

CODE	SEE PAGE	JUNCTION BLOCK AND WIRE HARNESS (CONNECTOR LOCATION)
1A	20	COWL WIRE AND J/B NO. 1 (INSTRUMENT PANEL LEFT)
1D		
1K		
1M		
2B	22	ENGINE ROOM MAIN WIRE AND J/B NO. 2 (ENGINE COMPARTMENT LEFT)
2C	22	ENGINE WIRE AND J/B NO. 2 (ENGINE COMPARTMENT LEFT)
2D		
3B	24	COWL WIRE AND J/B NO. 3 (BEHIND COMBINATION METER)
3C		
3D		

: CONNECTOR JOINING WIRE HARNESS AND WIRE HARNESS

CODE	SEE PAGE	JOINING WIRE HARNESS AND WIRE HARNESS (CONNECTOR LOCATION)
II1	42	COWL WIRE AND INSTRUMENT PANEL WIRE
II2	42	INSTRUMENT PANEL WIRE AND COWL WIRE
IN1	42	INSTRUMENT PANEL WIRE AND SWITCH WIRE
IP1	44	ENGINE WIRE AND COWL WIRE
IP3		
IQ1	44	ENGINE WIRE AND INSTRUMENT PANEL WIRE

: GROUND POINTS

CODE	SEE PAGE	GROUND POINTS LOCATION
EB	40 (5S–FE)	FRONT LEFT FENDER
EC	40 (5S–FE)	INTAKE MANIFOLD RH
ED	40 (5S–FE)	INTAKE MANIFOLD LH
IF	42	LEFT KICK PANEL

: SPLICE POINTS

CODE	SEE PAGE	WIRE HARNESS WITH SPLICE POINTS	CODE	SEE PAGE	WIRE HARNESS WITH SPLICE POINTS
E17	40 (5S–FE)	ENGINE WIRE	**I13**	44	COWL WIRE
E18			**I18**	44	ENGINE WIRE
I 1	44	COWL WIRE	**I23**	44	COWL WIRE
I 6	44	INSTRUMENT PANEL WIRE			

C 8 BLUE

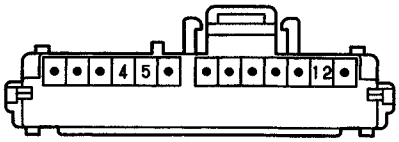

C11 BROWN

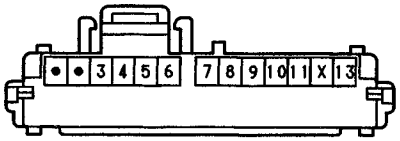

D 1 BLACK

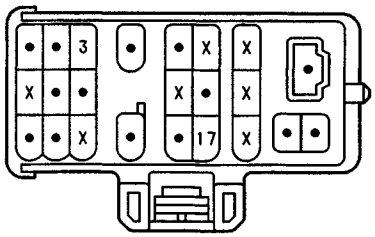

D 3 DARK GRAY

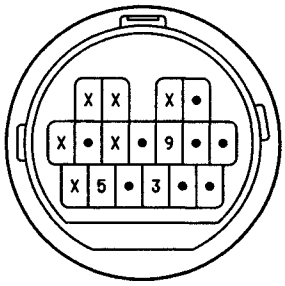

E 2 (A) BLACK



E 3 (B) BLACK



E 4 GREEN



E 6 BLACK



E 7 (C) DARK GRAY

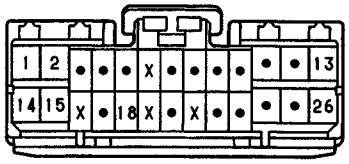

E 8 (B) DARK GRAY

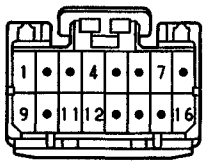

E10 (A) DARK GRAY

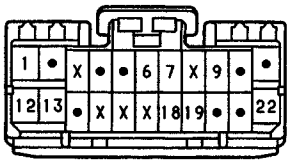

J 1 DARK GRAY

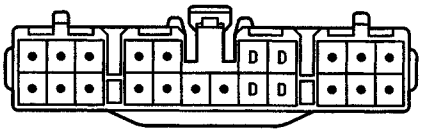

(HINT:SEE PAGE 7)

J 2

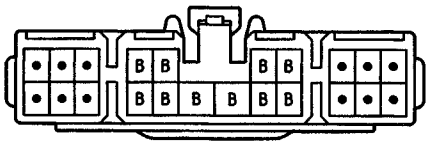

(HINT:SEE PAGE 7)

J 3

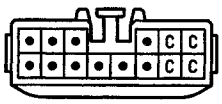

(HINT:SEE PAGE 7)

N 2 (A)



N 3 (B)

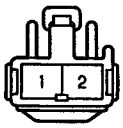

O 5 BLUE



P 1 GRAY

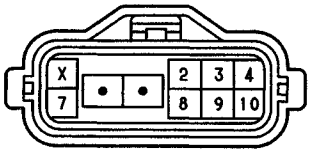

S10 BLUE

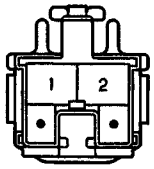

T 1 BLACK



V 5 GRAY



A 4 (A) GRAY



A 5 (B) BLACK



A 6 (B) GRAY

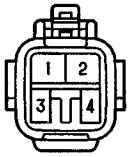

A 7 (A) GRAY

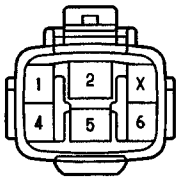

A 8, A 9 GRAY



A13 (A) DARK GRAY

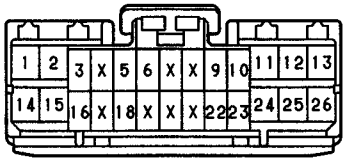

A14 (B) DARK GRAY

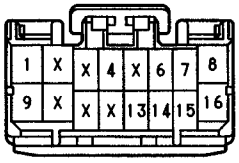

A19, A20 GRAY

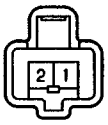

C 9 (A) BLUE

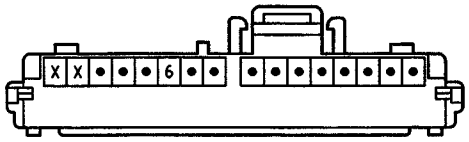

C10 (B) GRAY

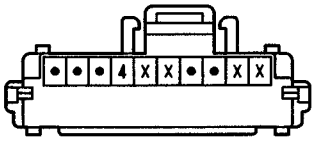

(1MZ-FE) D 1 BLACK

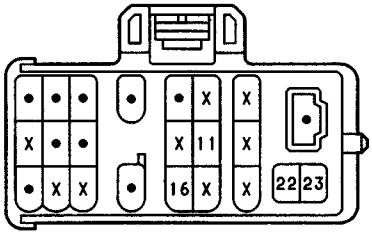

(5S-FE) D 1 BLACK

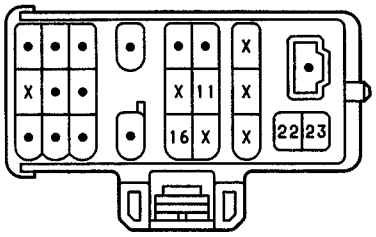

D 3 DARK GRAY

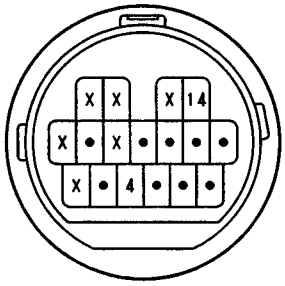

F18

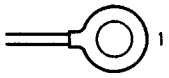

J 1 DARK GRAY

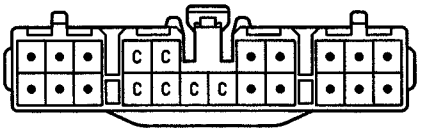

(HINT:SEE PAGE 7)

J 3

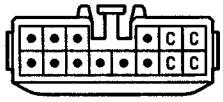

(HINT:SEE PAGE 7)

N 2 (A)



N 3 (B)

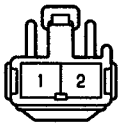

P 2



P 3



S10 BLUE

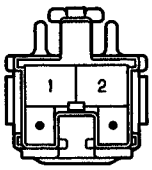

ABS (ANTI–LOCK BRAKE SYSTEM) (TMC MADE)

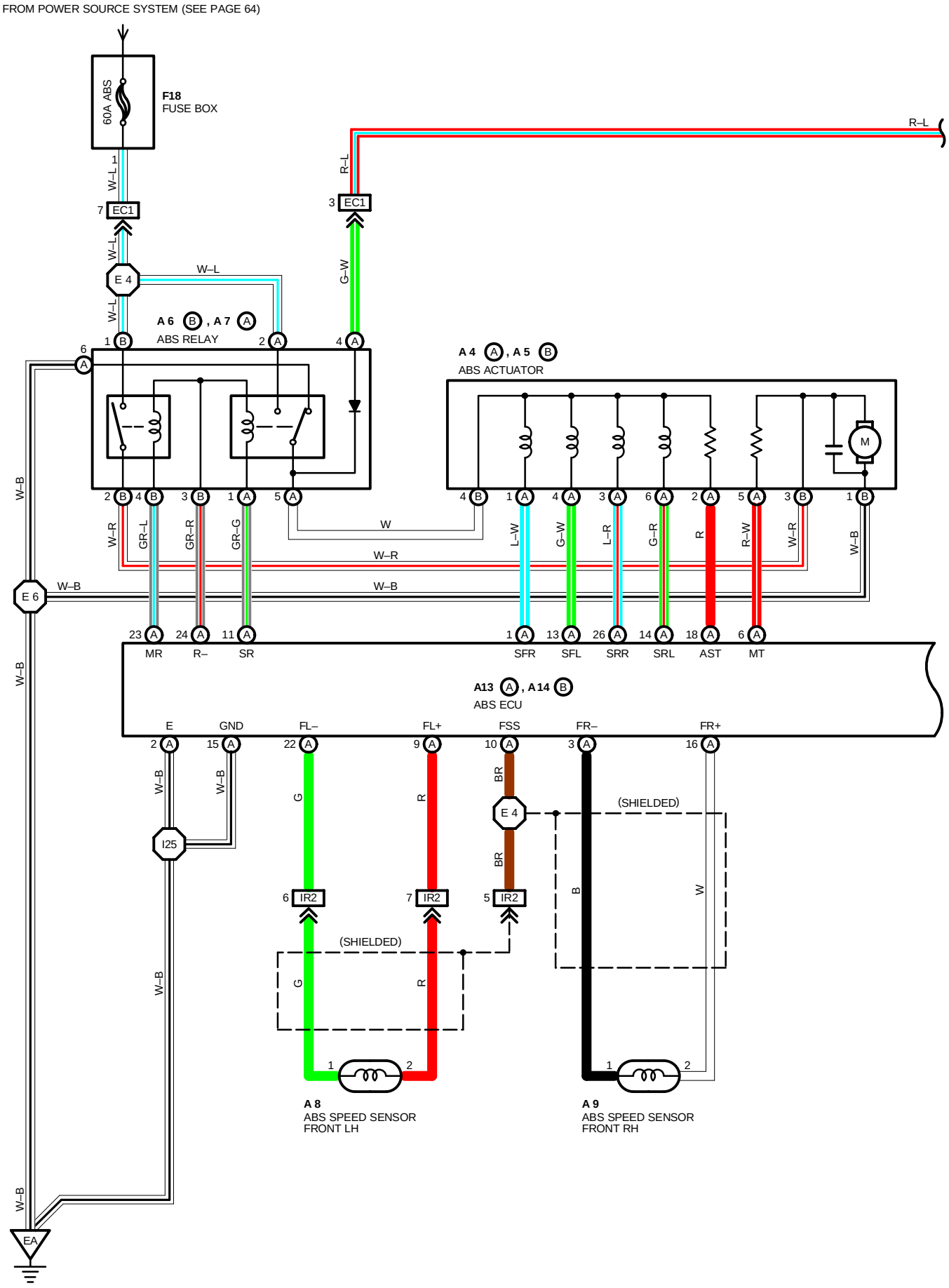

*1 : USA
*2 : CANADA

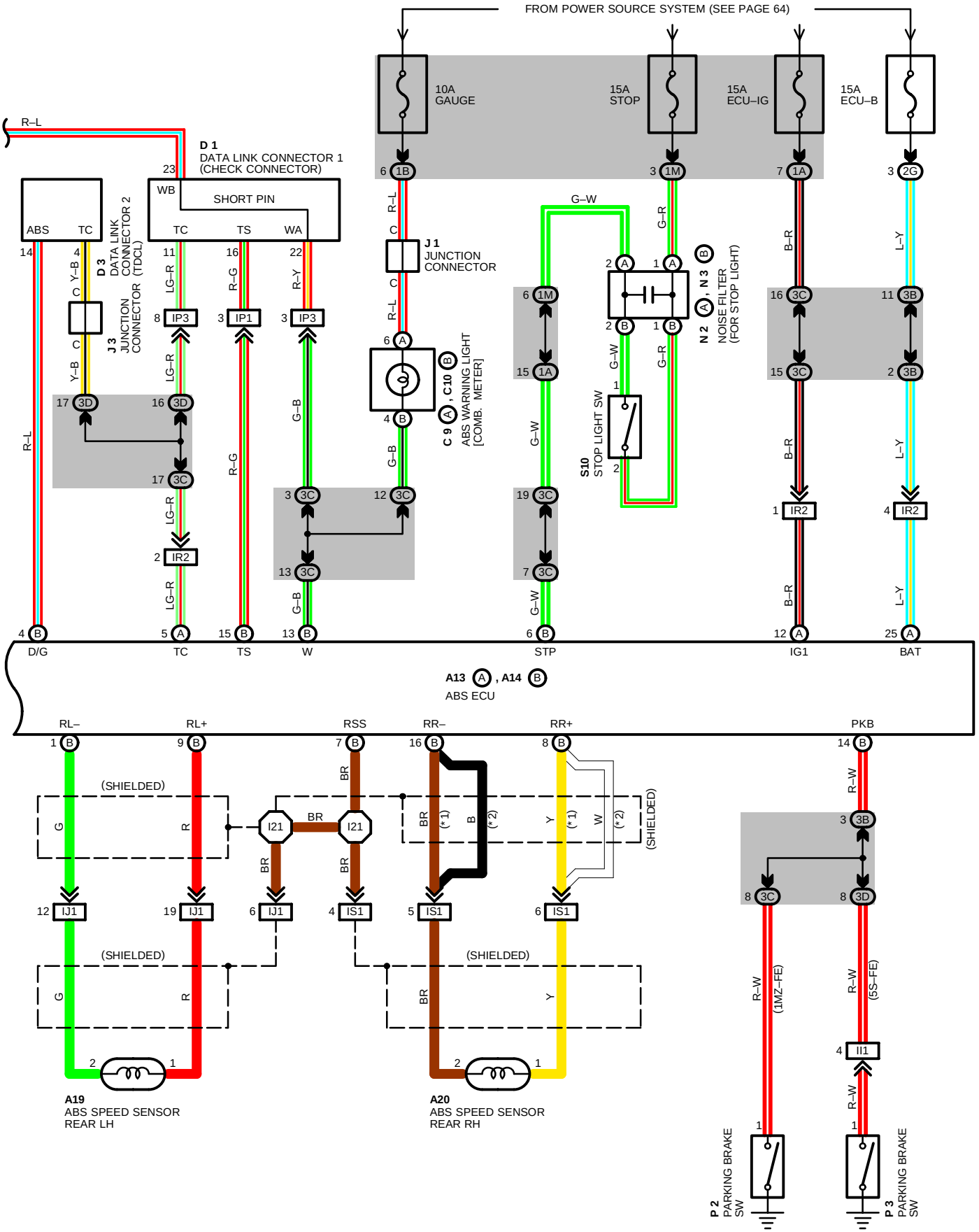

ABS (ANTI–LOCK BRAKE SYSTEM) (TMC MADE)

SYSTEM OUTLINE

THIS SYSTEM CONTROLS THE RESPECTIVE BRAKE FLUID PRESSURES ACTING ON THE DISC BRAKE CYLINDERS OF THE RIGHT FRONT WHEEL, LEFT FRONT WHEEL AND REAR WHEELS WHEN THE BRAKES ARE APPLIED IN A PANIC STOP SO THAT THE WHEELS DO NOT LOCK. THIS RESULTS IN IMPROVED DIRECTIONAL STABILITY AND STEERABILITY DURING PANIC BRAKEING.

1. INPUT SIGNALS

(1) SPEED SENSOR SIGNAL
THE SPEED OF THE WHEELS IS DETECTED AND INPUT TO **TERMINALS FL+, FR+, RL+** AND **RR+** OF THE ABS ECU.

(2) STOP LIGHT SW SIGNAL
A SIGNAL IS INPUT TO **TERMINAL STP** OF THE ABS ECU WHEN BRAKE PEDAL IS OPERATED.

(3) PARKING BRAKE SW SIGNAL
A SIGNAL IS INPUT TO **TERMINAL PKB** OF THE ABS ECU WHEN THE PARKING BRAKE IS OPERATED.

2. SYSTEM OPERATION

DURING SUDDEN BRAKEING THE ABS ECU, WHICH HAS SIGNALS INPUT FROM EACH SENSOR, CONTROLS THE CURRENT FLOWING TO THE SOLENOID INSIDE THE ACTUATOR AND LETS THE HYDRAULIC PRESSURE ACTING ON EACH WHEEL CYLINDER ESCAPE TO THE RESERVOIR. THE PUMP INSIDE THE ACTUATOR IS ALSO OPERATING AT THIS TIME AND IT RETURNS THE BRAKE FLUID FROM THE RESERVOIR TO THE MASTER CYLINDER, THUS PREVENTING LOCKING OF THE VEHICLE WHEELS.

IF THE ECU JUDGES THAT THE HYDRAULIC PRESSURE ACTING ON THE WHEEL CYLINDER IS INSUFFICIENT, THE CURRENT ACTING ON THE SOLENOID IS CONTROLLED AND THE HYDRAULIC PRESSURE IS INCREASED. HOLDING OF THE HYDRAULIC PRESSURE IS ALSO CONTROLLED BY THE ECU, BY THE SAME METHOD AS ABOVE. BY REPEATED PRESSURE REDUCTION, HOLDING AND INCREASE ARE REPLATED TO MAINTAIN VEHICLE STABILITY AND TO IMPROVE STEERBILITY DURING SUDDEN BRAKING.

SERVICE HINTS

A 4(A), A 5(B) ABS ACTUATOR
(A)1, **(A)**3, **(A)**4, **(A)**6 – **(A)**2 : APPROX. **6** Ω
(A)2–GROUND : APPROX. **5** Ω

A 6(B), A 7(A) ABS RELAY
(A)1–**(B)** 3 : **60** Ω–**100** Ω
(A)4–**(B)** 3 : **60** Ω–**100** Ω
(A)1, **(B)** 2–GROUND : APPROX. **12** VOLTS
(A)6–GROUND : APPROX. **12** VOLTS

A 8, A 9 ABS SPEED SENSOR FRONT LH, RH
1–2 : **0.8** K–**1.3** KΩ

A19, A20 ABS SPEED SENSOR REAR LH, RH
1–2 : **1.1** K–**1.5** KΩ

A13(A), A14(B) ABS ECU
(CONNECT THE ECU CONNECTORS)
(A) 5–GROUND : APPROX. **12** VOLTS WITH IGNITION SW AT **ON** POSITION AND DATA LINK CONNECTOR 1 (CHECK CONNECTOR) TS–EI NOT CONNECTED
(B)15–GROUND : APPROX. **12** VOLTS WITH IGNITION SW AT **ON** POSITION AND DATA LINK CONNECTOR 1 (CHECK CONNECTOR) TS–EI NOT CONNECTED
(A) 1–GROUND, **(A)** 13–GROUND : APPROX. **12** VOLTS WITH IGNITION SW AT **ON** POSITION AND ABS WARNING LIGHT GOES OFF
(A)14–GROUND, **(A)** 1–GROUND : APPROX. **12** VOLTS WITH IGNITION SW AT **ON** POSITION AND ABS WARNING LIGHT GOES OFF
(A)26–GROUND, **(A)** 18–GROUND : APPROX. **12** VOLTS WITH IGNITION SW AT **ON** POSITION AND ABS WARNING LIGHT GOES OFF
(A) 2–GROUND : ALWAYS CONTINUITY
(A)15–GROUND : ALWAYS CONTINUITY
(A)12–GROUND : APPROX. **12** VOLTS WITH IGNITION SW AT **ON** POSITION
(B) 6–GROUND : APPROX. **12** VOLTS WITH BRAKE PEDAL DEPRESSED
(A)25–GROUND : ALWAYS APPROX. **12** VOLTS

: PARTS LOCATION

CODE		SEE PAGE	CODE		SEE PAGE	CODE		SEE PAGE
A 4	A	28 (1MZ–FE), 30 (5S–FE)	**A19**		34	**J 3**		33
A 5	B	28 (1MZ–FE), 30 (5S–FE)	**A20**		34	**N 2**	A	33
A 6	B	28 (1MZ–FE), 30 (5S–FE)	**C 9**	A	32	**N 3**	B	33
A 7	A	28 (1MZ–FE), 30 (5S–FE)	**C10**	B	32	**P 2**		33
A 8		28 (1MZ–FE), 30 (5S–FE)	**D 1**		28 (1MZ–FE), 30 (5S–FE)	**P 3**		33
A 9		28 (1MZ–FE), 30 (5S–FE)	**D 3**		32	**S10**		33
A13	A	32	**F10**		28 (1MZ–FE), 30 (5S–FE)			
A14	B	32	**J 1**		33			

: JUNCTION BLOCK AND WIRE HARNESS CONNECTOR

CODE	SEE PAGE	JUNCTION BLOCK AND WIRE HARNESS (CONNECTOR LOCATION)
1A	20	COWL WIRE AND J/B NO. 1 (INSTRUMENT PANEL LEFT)
1B		
1M		
2G	22	COWL WIRE AND J/B NO. 2 (ENGINE COMPARTMENT LEFT)
3B	24	COWL WIRE AND J/B NO. 3 (BEHIND COMBINATION METER)
3C		
3D		

: CONNECTOR JOINING WIRE HARNESS AND WIRE HARNESS

CODE	SEE PAGE	JOINING WIRE HARNESS AND WIRE HARNESS (CONNECTOR LOCATION)
EC1	38 (1MZ–FE)	ENGINE WIRE AND ENGINE ROOM MAIN WIRE
	40 (5S–FE)	
II1	42	COWL WIRE AND INSTRUMENT PANEL WIRE
IJ1	42	FLOOR NO. 1 WIRE AND COWL WIRE
IP3	44	ENGINE WIRE AND COWL WIRE
IR2	44	ENGINE ROOM MAIN WIRE AND COWL WIRE
IS1	44	FLOOR NO. 2 WIRE AND COWL WIRE

: GROUND POINTS

CODE	SEE PAGE	GROUND POINTS LOCATION
EA	38 (1MZ–FE)	FRONT RIGHT FENDER
	40 (5S–FE)	

: SPLICE POINTS

CODE	SEE PAGE	WIRE HARNESS WITH SPLICE POINTS	CODE	SEE PAGE	WIRE HARNESS WITH SPLICE POINTS
E 4	38 (1MZ–FE)	ENGINE ROOM MAIN WIRE	**E 6**	40 (5S–FE)	ENGINE ROOM MAIN WIRE
	40 (5S–FE)		**I21**	44	COWL WIRE
E 6	38 (1MZ–FE)		**I25**	44	ENGINE ROOM MAIN WIRE

ABS (ANTI–LOCK BRAKE SYSTEM) (TMM MADE)

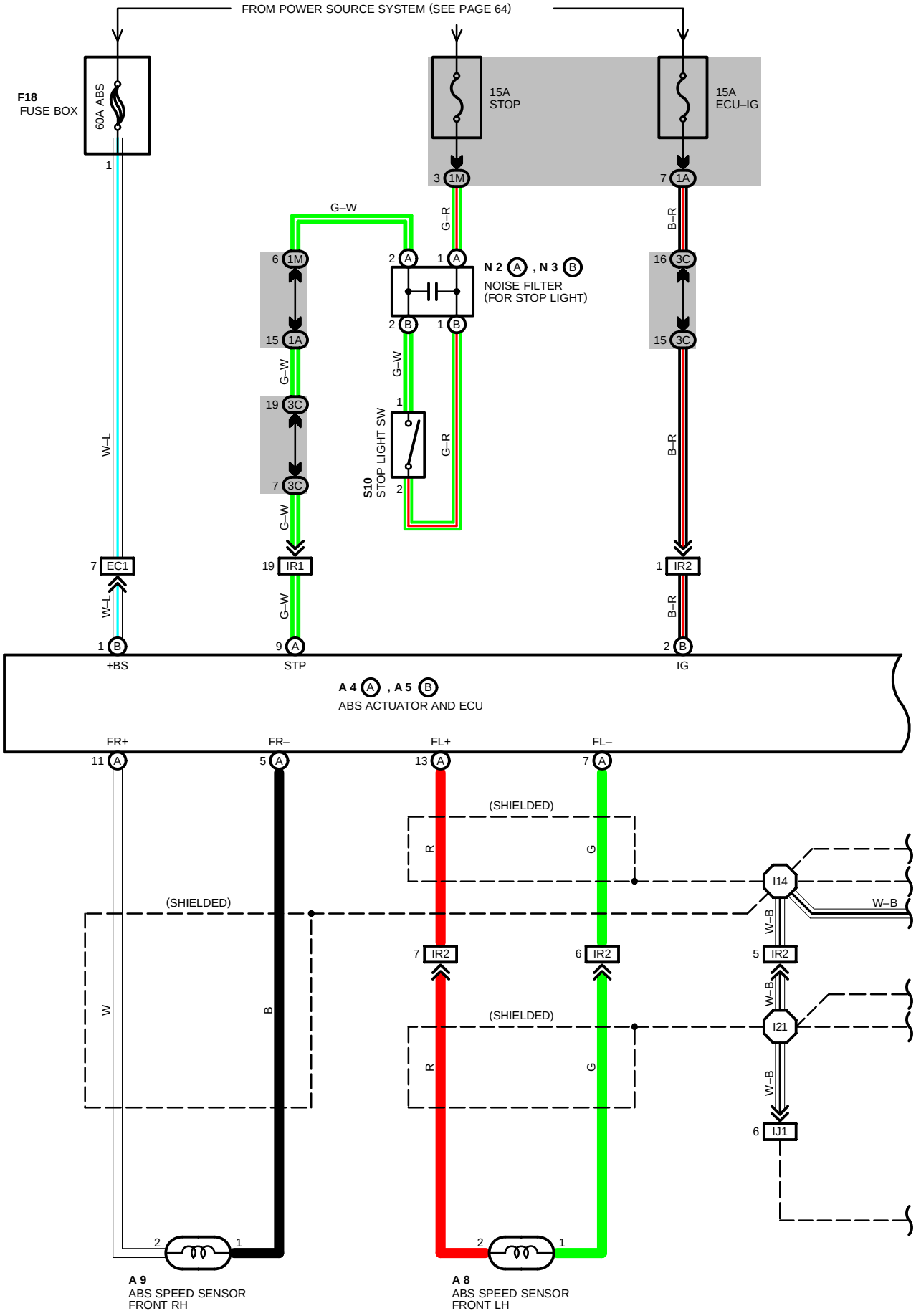

FROM POWER SOURCE SYSTEM (SEE PAGE 64)

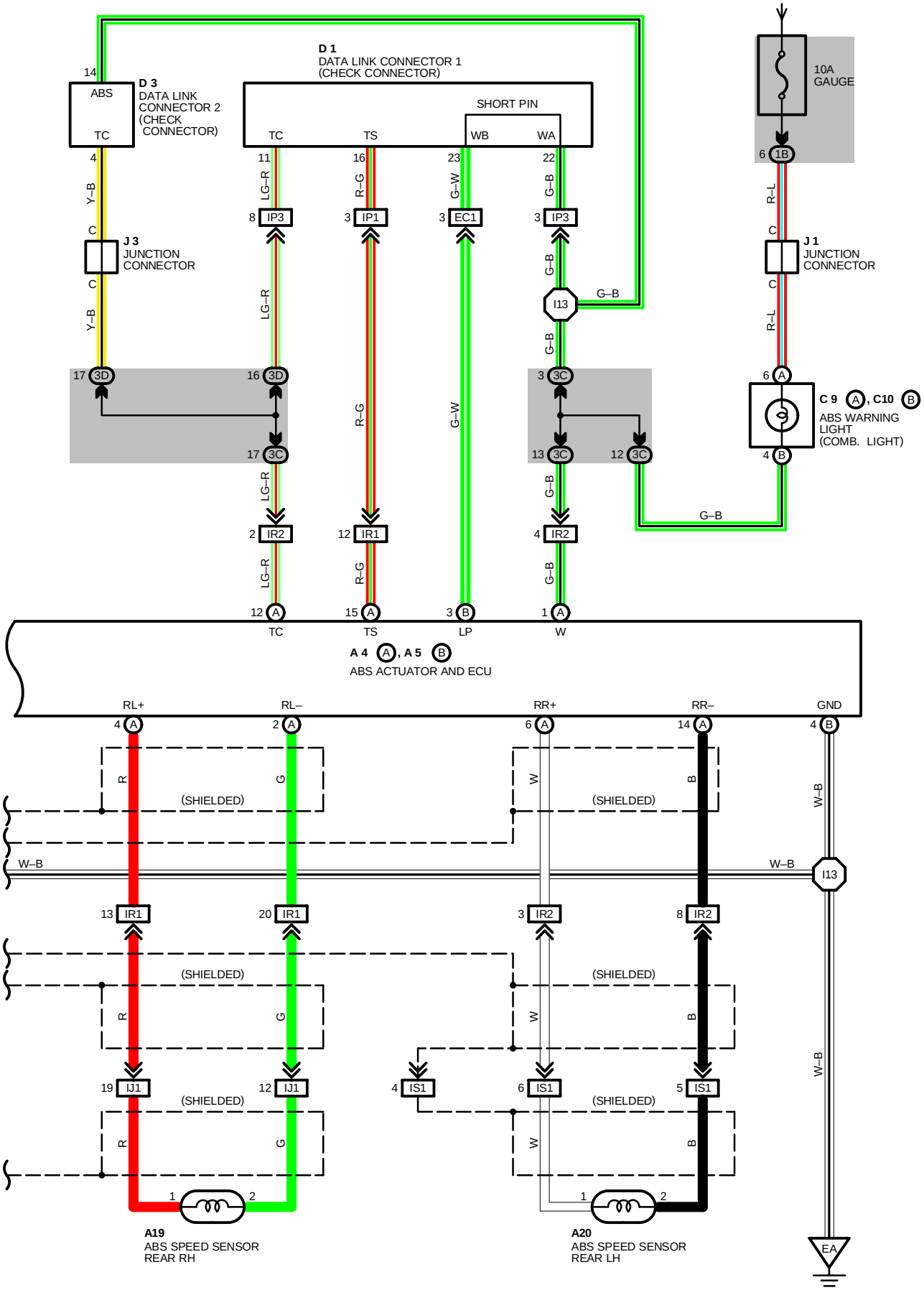

ABS (ANTI–LOCK BRAKE SYSTEM) (TMM MADE)

: PARTS LOCATION

CODE		SEE PAGE	CODE		SEE PAGE	CODE		SEE PAGE
A 4	A	28 (1MZ–FE), 30 (5S–FE)	**C 9**	A	32	**J 3**		33
A 5	B	28 (1MZ–FE), 30 (5S–FE)	**C10**	B	32	**N 2**	A	33
A 8		28 (1MZ–FE), 30 (5S–FE)	**D 1**		28 (1MZ–FE), 30 (5S–FE)	**N 3**	B	33
A 9		28 (1MZ–FE), 30 (5S–FE)	**D 3**		32	**S10**		33
A19		34 (S/D), 35 (C/P), 36 (W/G)	**F18**		28 (1MZ–FE), 30 (5S–FE)			
A20		34 (S/D), 35 (C/P), 36 (W/G)	**J 1**		33			

: JUNCTION BLOCK AND WIRE HARNESS CONNECTOR

CODE	SEE PAGE	JUNCTION BLOCK AND WIRE HARNESS (CONNECTOR LOCATION)
1A	20	COWL WIRE AND J/B NO. 1 (INSTRUMENT PANEL LEFT)
1B		
1M		
3C	24	COWL WIRE AND J/B NO. 3 (BEHIND COMBINATION METER)
3D		

: CONNECTOR JOINING WIRE HARNESS AND WIRE HARNESS

CODE	SEE PAGE	JOINING WIRE HARNESS AND WIRE HARNESS (CONNECTOR LOCATION)
EC1	38 (1MZ–FE)	ENGINE WIRE AND ENGINE ROOM MAIN WIRE
	40 (5S–FE)	
IJ1	42	FLOOR NO. 1 WIRE AND COWL WIRE
IP1	44	ENGINE WIRE AND COWL WIRE
IP3		
IR1	44	ENGINE ROOM MAIN WIRE AND COWL WIRE
IR2		
IS1	44	FLOOR NO. 2 WIRE AND COWL WIRE

: GROUND POINTS

CODE	SEE PAGE	GROUND POINTS LOCATION
EA	38 (1MZ–FE)	FRONT RIGHT FENDER
	40 (5S–FE)	

: SPLICE POINTS

CODE	SEE PAGE	WIRE HARNESS WITH SPLICE POINTS	CODE	SEE PAGE	WIRE HARNESS WITH SPLICE POINTS
I13	44	COWL WIRE	**I21**	44	COWL WIRE
I14					

A 4 (A) BLACK

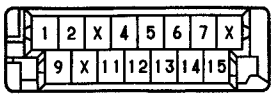

A 5 (B) BLACK



A 8, A 9 GRAY



A19, A20 GRAY

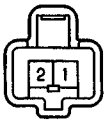

C 9 (A) BLUE

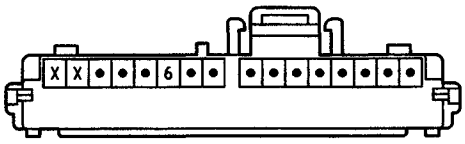

C10 (B) GRAY

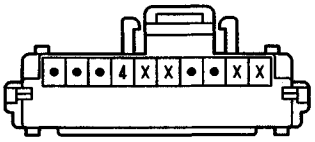

(1MZ-FE) D 1 BLACK

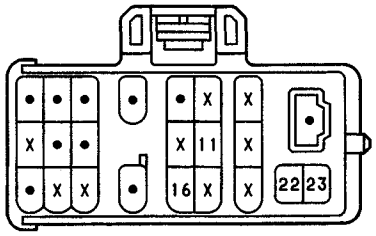

(5S-FE) D 1 BLACK

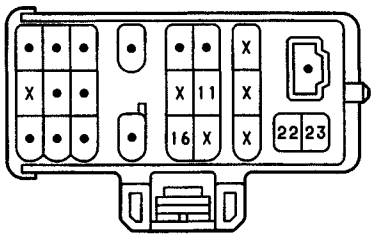

D 3 DARK GRAY

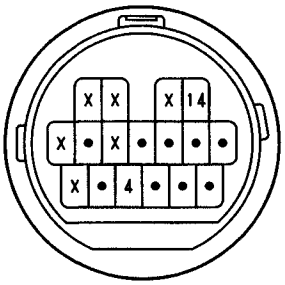

F18



J 1 DARK GRAY

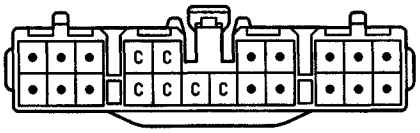

(HINT:SEE PAGE 7)

J 3

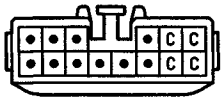

(HINT:SEE PAGE 7)

N 2 (A)



N 3 (B)

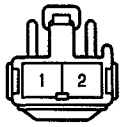

S10 BLUE

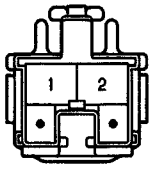

ABS (ANTI–LOCK BRAKE SYSTEM) (TMM MADE)

SYSTEM OUTLINE

THIS SYSTEM CONTROLS THE RESPECTIVE BRAKE FLUID PRESSURES ACTING ON THE DISC BRAKE CYLINDERS OF THE RIGHT FRONT WHEEL, LEFT FRONT WHEEL AND REAR WHEELS WHEN THE BRAKES ARE APPLIED IN A PANIC STOP SO THAT THE WHEELS DO NOT LOCK. THIS RESULTS IN IMPROVED DIRECTIONAL STABILITY AND STEERABILITY DURING PANIC BRAKEING.

1. INPUT SIGNALS

(1) SPEED SENSOR SIGNAL
THE SPEED OF THE WHEELS IS DETECTED AND INPUT TO **TERMINALS FL+, FR+, RL+** AND **RR+** OF THE ABS ECU.

(2) STOP LIGHT SW SIGNAL
A SIGNAL IS INPUT TO **TERMINAL STP** OF THE ABS ECU WHEN BRAKE PEDAL IS OPERATED.

2. SYSTEM OPERATION

DURING SUDDEN BRAKEING THE ABS ECU, WHICH HAS SIGNALS INPUT FROM EACH SENSOR, CONTROLS THE CURRENT FLOWING TO THE SOLENOID INSIDE THE ACTUATOR AND LETS THE HYDRAULIC PRESSURE ACTING ON EACH WHEEL CYLINDER ESCAPE TO THE RESERVOIR. THE PUMP INSIDE THE ACTUATOR IS ALSO OPERATING AT THIS TIME AND IT RETURNS THE BRAKE FLUID FROM THE RESERVOIR TO THE MASTER CYLINDER, THUS PREVENTING LOCKING OF THE VEHICLE WHEELS.

IF THE ECU JUDGES THAT THE HYDRAULIC PRESSURE ACTING ON THE WHEEL CYLINDER IS INSUFFICIENT, THE CURRENT ACTING ON THE SOLENOID IS CONTROLLED AND THE HYDRAULIC PRESSURE IS INCREASED. HOLDING OF THE HYDRAULIC PRESSURE IS ALSO CONTROLLED BY THE ECU, BY THE SAME METHOD AS ABOVE. BY REPEATED PRESSURE REDUCTION, HOLDING AND INCREASE ARE REPLATED TO MAINTAIN VEHICLE STABILITY AND TO IMPROVE STEERBILITY DURING SUDDEN BRAKING.

SERVICE HINTS

A 8, A 9 ABS SPEED SENSOR FRONT LH, RH
1–2 : **0.8** K–**1.3** KΩ

A19, A20 ABS SPEED SENSOR REAR LH, RH
1–2 : **1.1** K–**1.5** KΩ

A 4(A), A 5(B) ABS ECU
(CONNECT THE ECU CONNECTORS)
(A)12–GROUND : APPROX. **12** VOLTS WITH IGNITION SW AT **ON** POSITION AND DATA LINK CONNECTOR 1 (CHECK CONNECTOR) TS–EI NOT CONNECTED
(A)15–GROUND : APPROX. **12** VOLTS WITH IGNITION SW AT **ON** POSITION AND DATA LINK CONNECTOR 1 (CHECK CONNECTOR) TS–EI NOT CONNECTED
(B) 4–GROUND : ALWAYS CONTINUITY
(B) 2–GROUND : APPROX. **12** VOLTS WITH IGNITION SW AT **ON** POSITION
(A) 9–GROUND : APPROX. **12** VOLTS WITH BRAKE PEDAL DEPRESSED
(B) 1–GROUND : ALWAYS APPROX. **12** VOLTS

ABS (ANTI – LOCK BRAKE SYSTEM) (TMM MADE)

-Memo

ELECTRIC TENSION REDUCER

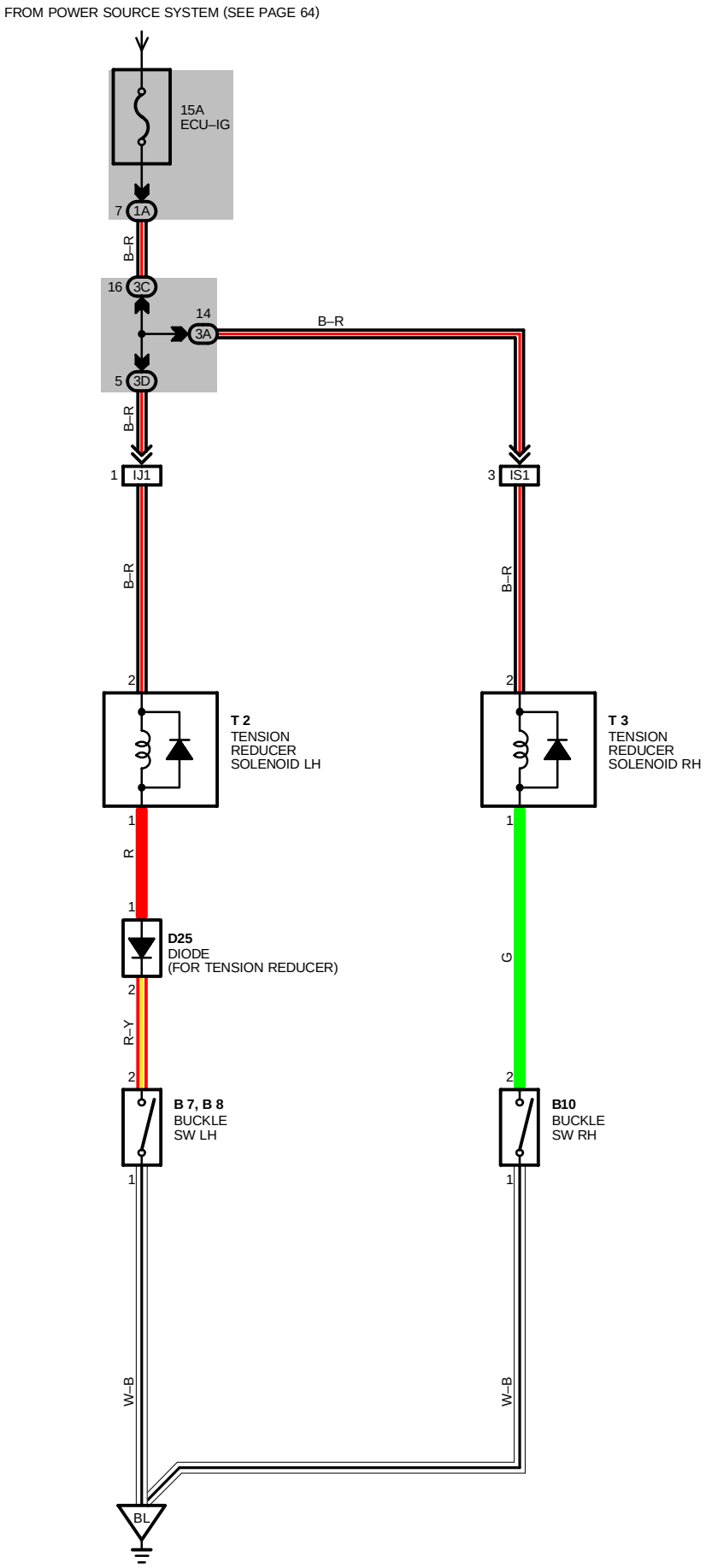

SERVICE HINTS

B 7, B 8 BUCKLE SW LH
1–2 : CLOSED WITH DRIVER'S LAP BELT IN USE

B10 BUCKLE SW RH
1–2 : CLOSED WITH PASSENGER'S LAP BELT IN USE

T 2, T 3 TENSION REDUCER SOLENOID LH, RH
2–GROUND : APPROX. **12** VOLTS WITH IGNITION SW AT **ON** POSITION

: PARTS LOCATION

CODE	SEE PAGE	CODE	SEE PAGE	CODE	SEE PAGE
B 7	32	**B10**	32	**T 2**	35
B 8	32	**D25**	32	**T 3**	35

: JUNCTION BLOCK AND WIRE HARNESS CONNECTOR

CODE	SEE PAGE	JUNCTION BLOCK AND WIRE HARNESS (CONNECTOR LOCATION)
1A	20	COWL WIRE AND J/B NO. 1 (INSTRUMENT PANEL LEFT)
3A	24	COWL WIRE AND J/B NO. 3 (BEHIND COMBINATION METER)
3C		

: CONNECTOR JOINING WIRE HARNESS AND WIRE HARNESS

CODE	SEE PAGE	JOINING WIRE HARNESS AND WIRE HARNESS (CONNECTOR LOCATION)
IJ1	42	FLOOR NO. 1 WIRE AND COWL WIRE
IS1	44	FLOOR NO. 2 WIRE AND COWL WIRE

: GROUND POINTS

CODE	SEE PAGE	GROUND POINTS LOCATION
BL	46 (S/D)	UNDER THE LEFT QUARTER PILLAR
	48 (C/P)	
	50 (W/G)	

(*1) **B 7**

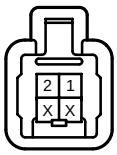

(*2) **B 8**

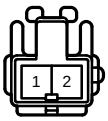

B10

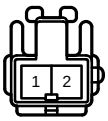

D25 BLACK



T 2

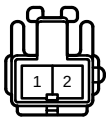

T 3

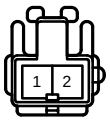

AUTO ANTENNA (S/D, C/P)

*1 : 6 SPEAKER
*2 : 4 SPEAKER

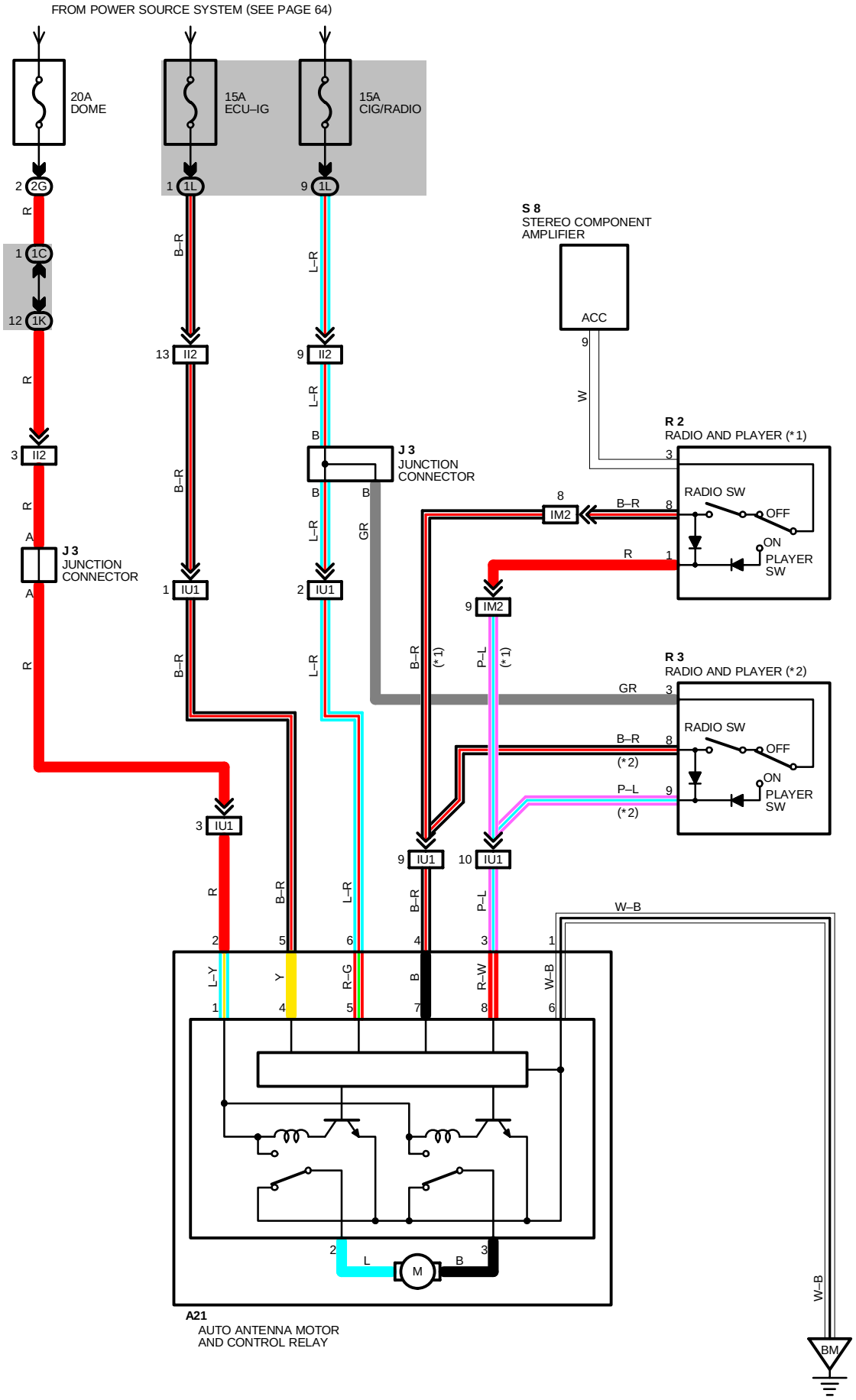

SERVICE HINTS

A21 AUTO ANTENNA MOTOR AND RELAY

9–GROUND : APPROX. **12** VOLTS WITH IGNITION SW AT **ON** POSITION
5–GROUND : APPROX. **12** VOLTS WITH IGNITION SW AT **ACC** OR **ON** POSITION
7–GROUND : ALWAYS APPROX. **12** VOLTS
8–GROUND : APPROX. **12** VOLTS WITH IGNITION SW AT **ACC** OR **ON** POSITION AND RADIO SW ON
3–GROUND : CONTINUITY (UPPER LIMIT SW ON) UNLESS ANTENNA AT **UP** STOP
2–GROUND : CONTINUITY (DOWN LIMIT SW ON) UNLESS ANTENNA AT **DOWN** STOP
4–3 : CLOSED WITH IGNITION SW AT **ACC** OR **ON** POSITION AND RADIO SW ON AND PLAYER SW OFF UNTIL ANTENNA AT **UPPERMOST** POSITION
1–2 : CLOSED WITH IGNITION SW AT **ACC** OR **ON** POSITION AND RADIO SW OFF AND PLAYER SW OFF UNTIL ANTENNA AT **LOWERMOST** POSITION
1–2: CLOSED WITH IGNITION SW OFF UNTIL ANTENNA AT **LOWERMOST** POSITION

○ : PARTS LOCATION

CODE	SEE PAGE	CODE	SEE PAGE	CODE	SEE PAGE
A21	34 (S/D), 35 (C/P)	**R 2**	33	**S 8**	33
J 3	33	**R 3**	33		

⬭ : JUNCTION BLOCK AND WIRE HARNESS CONNECTOR

CODE	SEE PAGE	JUNCTION BLOCK AND WIRE HARNESS (CONNECTOR LOCATION)
1C	20	COWL WIRE AND J/B NO. 1 (INSTRUMENT PANEL LEFT)
1K		
1L		
2G	22	COWL WIRE AND J/B NO. 2 (ENGINE COMPARTMENT LEFT)

▭ : CONNECTOR JOINING WIRE HARNESS AND WIRE HARNESS

CODE	SEE PAGE	JOINING WIRE HARNESS AND WIRE HARNESS (CONNECTOR LOCATION)
II2	42	INSTRUMENT PANEL WIRE AND COWL WIRE
IM2	42	INSTRUMENT PANEL WIRE AND CONSOLE BOX WIRE
IU1	44	FLOOR NO. 2 WIRE AND INSTRUMENT PANEL WIRE

▽ : GROUND POINTS

CODE	SEE PAGE	GROUND POINTS LOCATION
BM	46 (S/D)	UNDER THE LEFT QUARTER PILLAR
	48 (C/P)	

A21



J 3

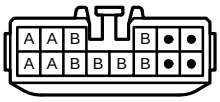

(HINT : SEE PAGE 7)

R 2

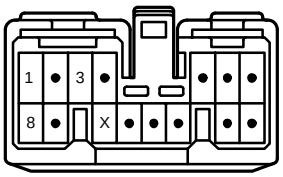

R 3 BLUE

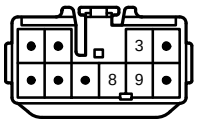

S 8

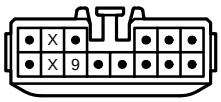

AUTO ANTENNA (W/G)

*1 : 8 SPEAKER
*2 : 6 SPEAKER

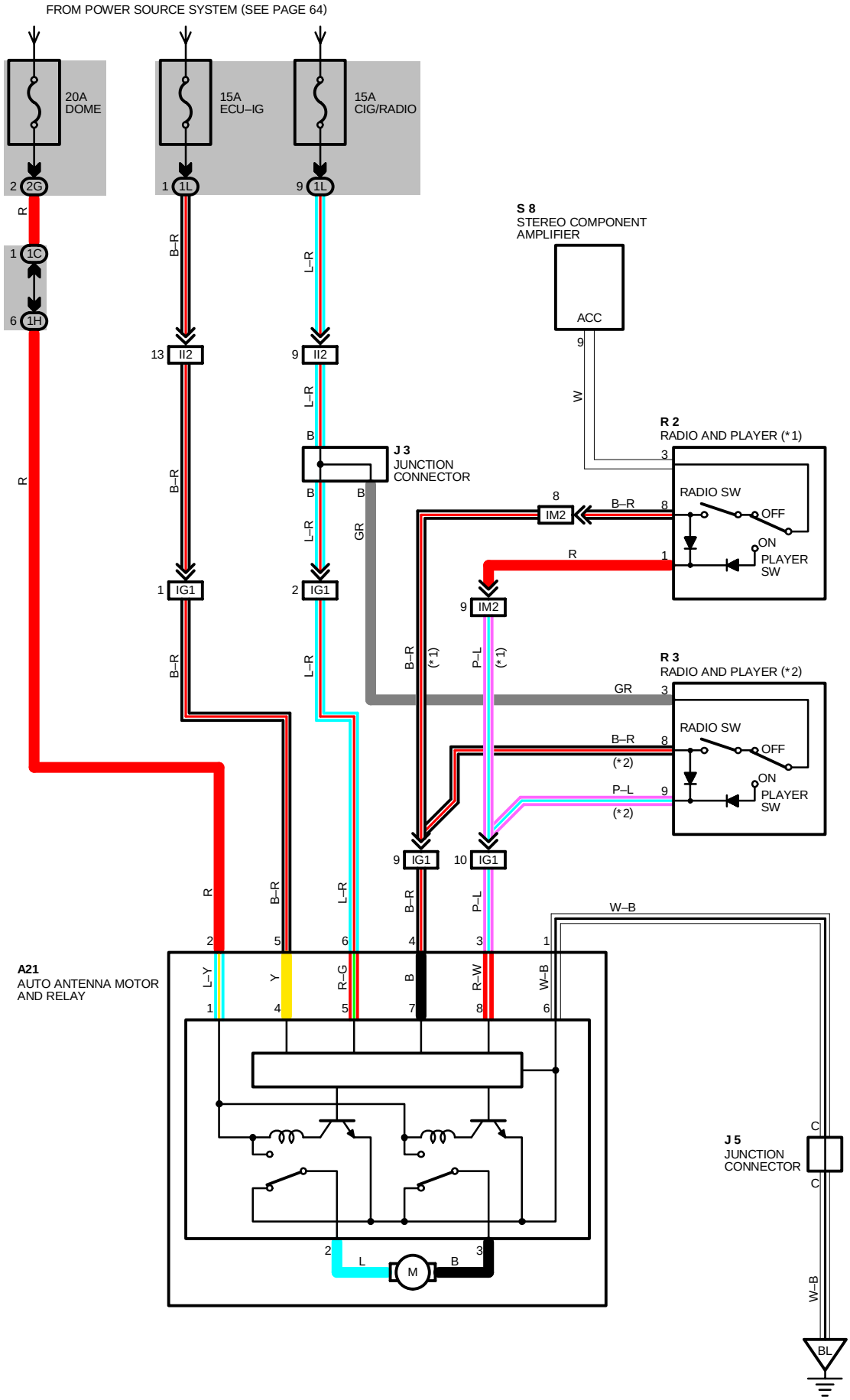

SERVICE HINTS

A21 AUTO ANTENNA MOTOR AND RELAY

9–GROUND : APPROX. **12** VOLTS WITH IGNITION SW AT **ON** POSITION
5–GROUND : APPROX. **12** VOLTS WITH IGNITION SW AT **ACC** OR **ON** POSITION
7–GROUND : ALWAYS APPROX. **12** VOLTS
8–GROUND : APPROX. **12** VOLTS WITH IGNITION SW AT **ACC** OR **ON** POSITION AND RADIO SW ON
3–GROUND : CONTINUITY (UPPER LIMIT SW ON) UNLESS ANTENNA AT **UP** STOP
2–GROUND : CONTINUITY (DOWN LIMIT SW ON) UNLESS ANTENNA AT **DOWN** STOP
4–3 : CLOSED WITH IGNITION SW AT **ACC** OR **ON** POSITION AND RADIO SW ON AND PLAYER SW OFF UNTIL ANTENNA AT **UPPERMOST** POSITION
1–2 : CLOSED WITH IGNITION SW AT **ACC** OR **ON** POSITION AND RADIO SW OFF AND PLAYER SW OFF UNTIL ANTENNA AT **LOWERMOST** POSITION
1–2 : CLOSED WITH IGNITION SW OFF UNTIL ANTENNA AT **LOWERMOST** POSITION

○ : PARTS LOCATION

CODE	SEE PAGE	CODE	SEE PAGE	CODE	SEE PAGE
A21	36 (W/G)	**J 5**	36 (W/G)	**R 3**	33
J 3	33	**R 2**	33	**S 8**	33

⬭ : JUNCTION BLOCK AND WIRE HARNESS CONNECTOR

CODE	SEE PAGE	JUNCTION BLOCK AND WIRE HARNESS (CONNECTOR LOCATION)
1C	20	COWL WIRE AND J/B NO. 1 (INSTRUMENT PANEL LEFT)
1H	20	FLOOR NO. 1 WIRE J/B NO. 1 (INSTRUMENT PANEL LEFT)
1L	20	COWL WIRE AND J/B NO. 1 (INSTRUMENT PANEL LEFT)
2G	22	COWL WIRE AND J/B NO. 2 (ENGINE COMPARTMENT LEFT)

▭ : CONNECTOR JOINING WIRE HARNESS AND WIRE HARNESS

CODE	SEE PAGE	JOINING WIRE HARNESS AND WIRE HARNESS (CONNECTOR LOCATION)
II2	42	INSTRUMENT PANEL WIRE AND COWL WIRE
IM2	42	INSTRUMENT PANEL WIRE AND CONSOLE BOX WIRE
IG1	42	FLOOR NO. 1 WIRE AND INSTRUMENT PANEL WIRE

▽ : GROUND POINTS

CODE	SEE PAGE	GROUND POINTS LOCATION
BL	46 (S/D)	UNDER THE LEFT QUARTER PILLAR
	48 (C/P)	
	50 (W/G)	

A21



J 3

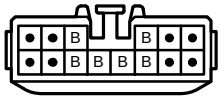

(HINT : SEE PAGE 7)

J 5

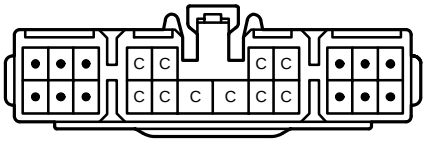

(HINT : SEE PAGE 7)

R 2

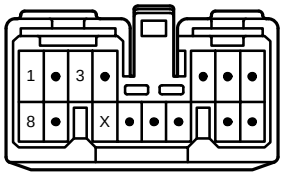

R 3 BLUE

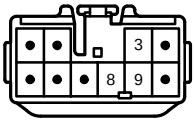

S 8

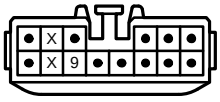

RADIO AND PLAYER (S/D, C/P 6 SPEAKER)

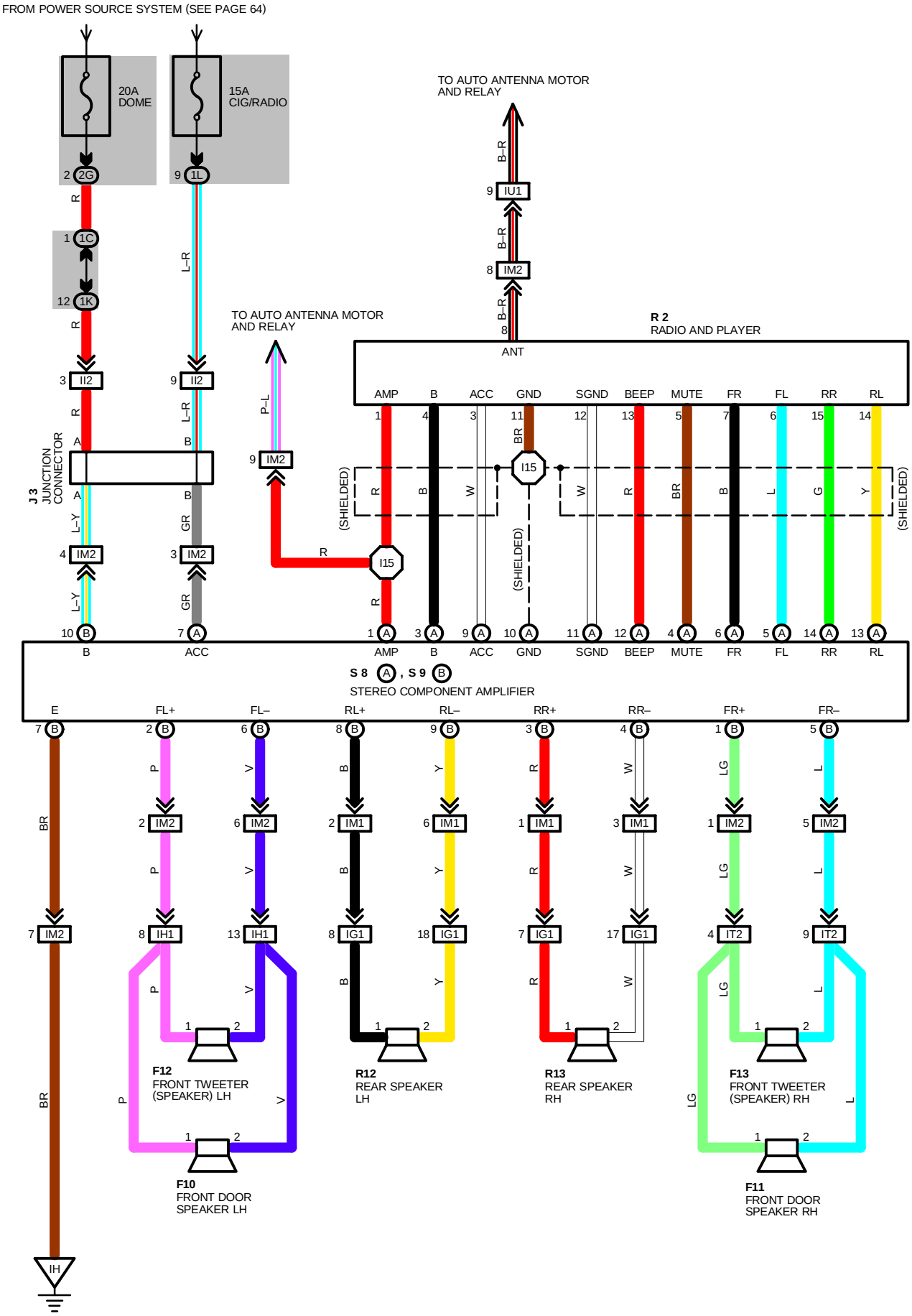

SERVICE HINTS

S 8(A), S 9(B) STEREO COMPONENT AMPLIFIER

(A) 7–GROUND : APPROX. **12** VOLTS WITH IGNITION SW AT **ON** OR **ACC** POSITION
(B) 7–GROUND : ALWAYS CONTINUITY
(B)10–GROUND : ALWAYS APPROX. **12** VOLTS

: PARTS LOCATION

CODE	SEE PAGE	CODE	SEE PAGE	CODE		SEE PAGE
F10	28 (1MZ–FE), 30 (5S–FE)	**J 3**	33	**S 8**	A	33
F11	34 (S/D), 35 (C/P)	**R 2**	33	**S 9**	B	33
F12	34 (S/D), 35 (C/P)	**R12**	34 (S/D), 35 (C/P)			
F13	34 (S/D), 35 (C/P)	**R13**	34 (S/D), 35 (C/P)			

: JUNCTION BLOCK AND WIRE HARNESS CONNECTOR

CODE	SEE PAGE	JUNCTION BLOCK AND WIRE HARNESS (CONNECTOR LOCATION)
1C	20	COWL WIRE AND J/B NO. 1 (INSTRUMENT PANEL LEFT)
1K		
1L		
2G	22	COWL WIRE AND J/B NO. 2 (ENGINE COMPARTMENT LEFT)

: CONNECTOR JOINING WIRE HARNESS AND WIRE HARNESS

CODE	SEE PAGE	JOINING WIRE HARNESS AND WIRE HARNESS (CONNECTOR LOCATION)
IG1	42	FLOOR NO. 1 WIRE AND INSTRUMENT PANEL WIRE
IH1	42	FRONT DOOR LH WIRE AND INSTRUMENT PANEL WIRE
II2	42	INSTRUMENT PANEL WIRE AND COWL WIRE
IM1	42	INSTRUMENT PANEL WIRE AND CONSOLE BOX WIRE
IM2		
IT2	44	FRONT DOOR RH WIRE AND INSTRUMENT PANEL WIRE
IU1	44	FLOOR NO. 2 WIRE AND INSTRUMENT PANEL WIRE

: GROUND POINTS

CODE	SEE PAGE	GROUND POINTS LOCATION
IH	42	INSTRUMENT PANEL BRACE RH

: SPLICE POINTS

CODE	SEE PAGE	WIRE HARNESS WITH SPLICE POINTS	CODE	SEE PAGE	WIRE HARNESS WITH SPLICE POINTS
I15	44	CONSOLE BOX WIRE			

F10, F11 BLACK



F12, F13

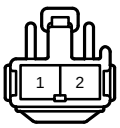

J 3

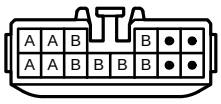

(HINT : SEE PAGE 7)

R 2 BLUE

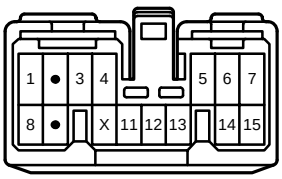

R12, R13



S 8 (A)

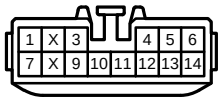

S 9 (B)

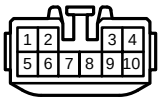

RADIO AND PLAYER (S/D, C/P 4 SPEAKER)

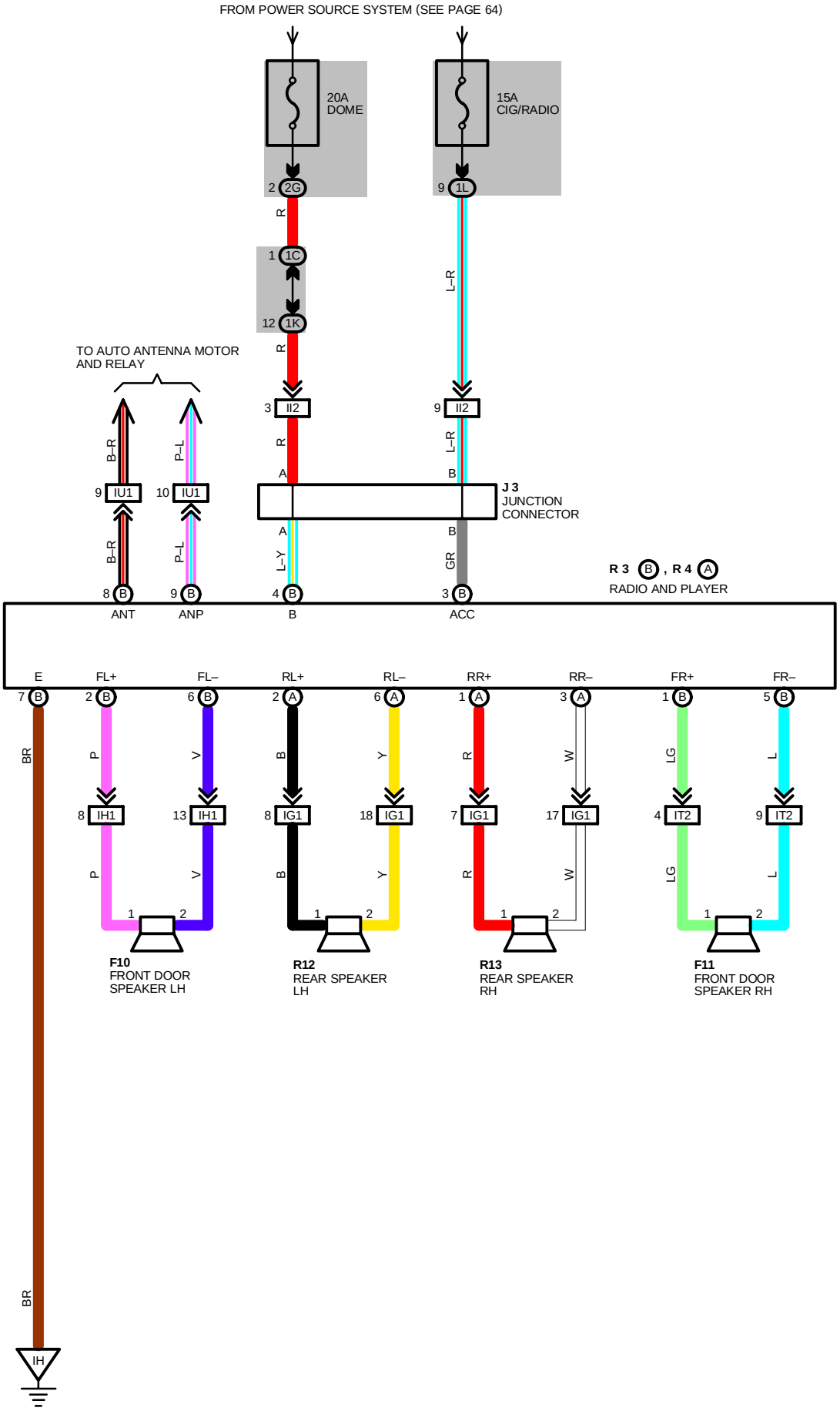

SERVICE HINTS

R 3(B) RADIO AND PLAYER

(B) 3–GROUND : APPROX. **12** VOLTS WITH IGNITION SW AT **ON** OR **ACC** POSITION
(B) 4–GROUND : ALWAYS APPROX. **12** VOLTS
(B) 7–GROUND : ALWAYS CONTINUITY

○ : PARTS LOCATION

CODE	SEE PAGE	CODE		SEE PAGE	CODE	SEE PAGE
F10	28 (1MZ–FE), 30 (5S–FE)	**R 3**	B	33	**R13**	34 (S/D), 35 (C/P)
F11	34 (S/D), 35 (C/P)	**R 4**	A	33		
J 3	33	**R12**		34 (S/D), 35 (C/P)		

⬭ : JUNCTION BLOCK AND WIRE HARNESS CONNECTOR

CODE	SEE PAGE	JUNCTION BLOCK AND WIRE HARNESS (CONNECTOR LOCATION)
1C	20	COWL WIRE AND J/B NO. 1 (INSTRUMENT PANEL LEFT)
1K		
1L		
2G	22	COWL WIRE AND J/B NO. 2 (ENGINE COMPARTMENT LEFT)

▭ : CONNECTOR JOINING WIRE HARNESS AND WIRE HARNESS

CODE	SEE PAGE	JOINING WIRE HARNESS AND WIRE HARNESS (CONNECTOR LOCATION)
IG1	42	FLOOR NO. 1 WIRE AND INSTRUMENT PANEL WIRE
IH1	42	FRONT DOOR LH WIRE AND INSTRUMENT PANEL WIRE
II2	42	INSTRUMENT PANEL WIRE AND COWL WIRE
IT2	44	FRONT DOOR RH WIRE AND INSTRUMENT PANEL WIRE
IU1	44	FLOOR NO. 2 WIRE AND INSTRUMENT PANEL WIRE

▽ : GROUND POINTS

CODE	SEE PAGE	GROUND POINTS LOCATION
IH	42	INSTRUMENT PANEL BRACE RH

F10, F11 BLACK

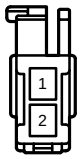

J 3

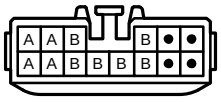

(HINT : SEE PAGE 7)

R 3 (B) BLUE

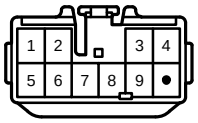

R 4 (A) BLUE



R12, R13



RADIO AND PLAYER (W/G 8 SPEAKER)

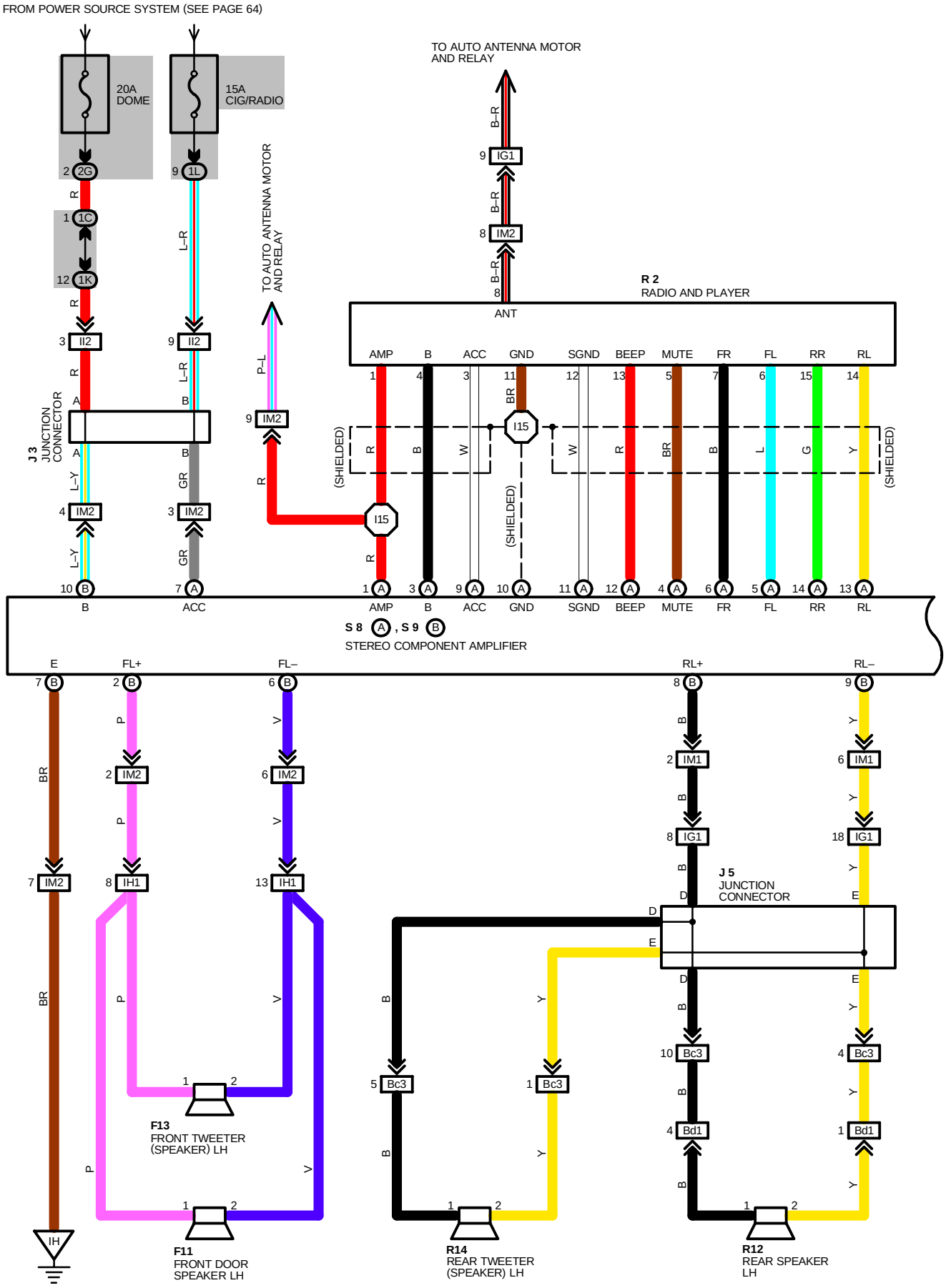

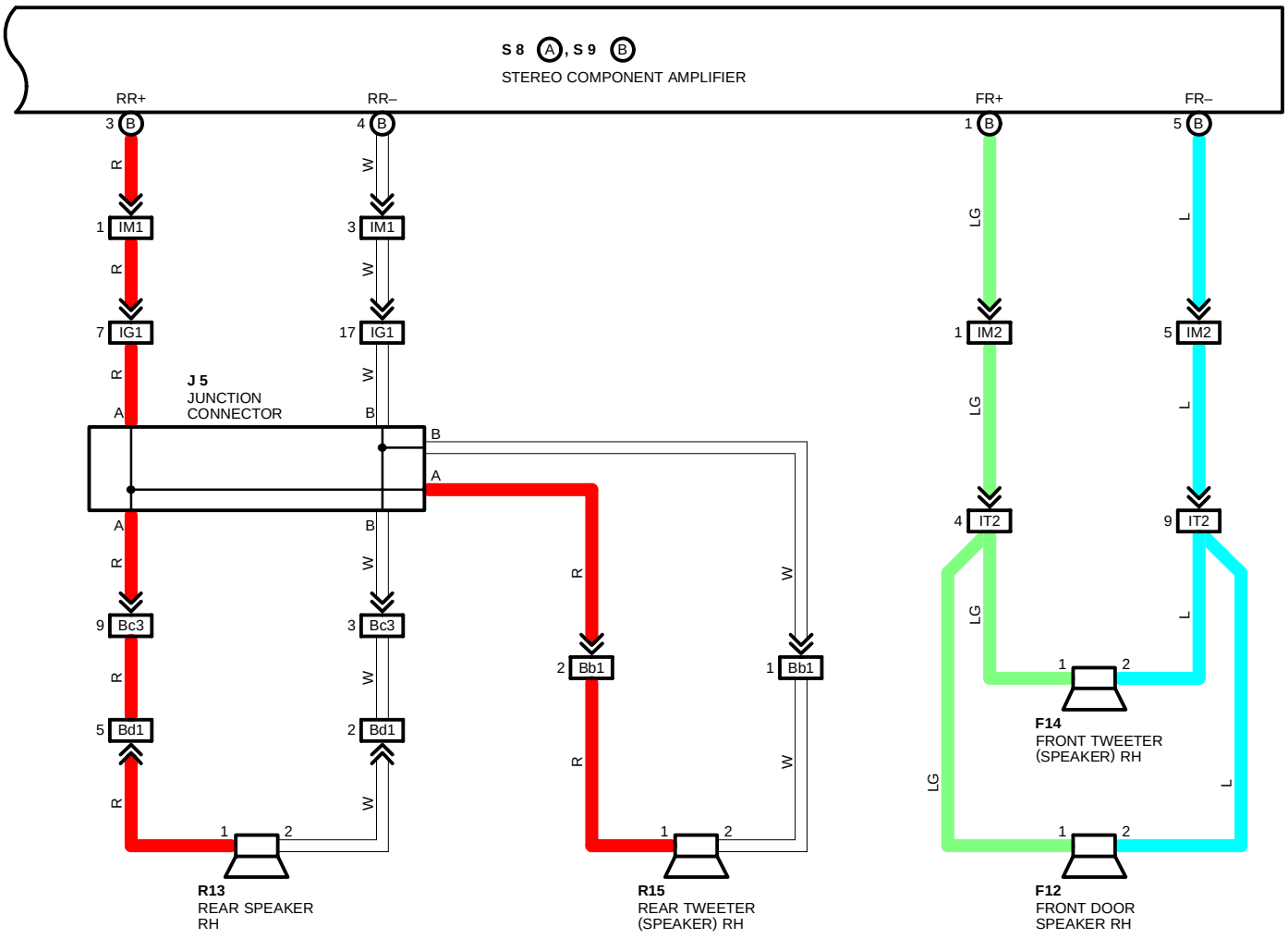
S 8 A, S 9 B
STEREO COMPONENT AMPLIFIER
RR+
RR–
FR+
FR–
3 B
4 B
1 B
5 B
R
W
LG
L
1 IM1
3 IM1
1 IM2
5 IM2
7 IG1
17 IG1
4 IT2
9 IT2
J 5
JUNCTION
CONNECTOR
A
B
9 Bc3
3 Bc3
5 Bd1
2 Bd1
2 Bb1
1 Bb1
F14
FRONT TWEETER
(SPEAKER) RH
R13
REAR SPEAKER
RH
R15
REAR TWEETER
(SPEAKER) RH
F12
FRONT DOOR
SPEAKER RH

RADIO AND PLAYER (W/G 8 SPEAKER)

SERVICE HINTS

S 8(A), S 9(B) STEREO COMPONENT AMPLIFIER

(A) 7–GROUND : APPROX. **12** VOLTS WITH IGNITION SW AT **ON** OR **ACC** POSITION
(B) 7–GROUND : ALWAYS CONTINUITY
(B)10–GROUND : ALWAYS APPROX. **12** VOLTS

: PARTS LOCATION

CODE	SEE PAGE	CODE	SEE PAGE	CODE		SEE PAGE
F11	36 (W/G)	**J 5**	36	**R15**		36 (W/G)
F12	36 (W/G)	**R 2**	33	**S 8**	A	33
F13	36 (W/G)	**R12**	36 (W/G)	**S 9**	B	33
F14	36 (W/G)	**R13**	36 (W/G)			
J 3	33	**R14**	36 (W/G)			

: JUNCTION BLOCK AND WIRE HARNESS CONNECTOR

CODE	SEE PAGE	JUNCTION BLOCK AND WIRE HARNESS (CONNECTOR LOCATION)
1C	20	COWL WIRE AND J/B NO. 1 (INSTRUMENT PANEL LEFT)
1K		
1L		
2G	22	COWL WIRE AND J/B NO. 2 (ENGINE COMPARTMENT LEFT)

: CONNECTOR JOINING WIRE HARNESS AND WIRE HARNESS

CODE	SEE PAGE	JOINING WIRE HARNESS AND WIRE HARNESS (CONNECTOR LOCATION)
IG1	42	FLOOR NO. 1 WIRE AND INSTRUMENT PANEL WIRE
IH1	42	FRONT DOOR LH WIRE AND INSTRUMENT PANEL WIRE
II2	42	INSTRUMENT PANEL WIRE AND COWL WIRE
IM1	42	INSTRUMENT PANEL WIRE AND CONSOLE BOX WIRE
IM2		
IT2	44	FRONT DOOR RH WIRE AND INSTRUMENT PANEL WIRE
Bb1	50 (W/G)	LUGGAGE ROOM NO. 1 WIRE AND FLOOR NO. 1 WIRE
Bc3	50 (W/G)	BACK DOOR NO. 1 WIRE AND FLOOR NO. 1 WIRE
Bd1	50 (W/G)	BACK DOOR NO. 1 WIRE AND BACK DOOR NO. 2 WIRE

: GROUND POINTS

CODE	SEE PAGE	GROUND POINTS LOCATION
IH	42	INSTRUMENT PANEL BRACE RH

: SPLICE POINTS

CODE	SEE PAGE	WIRE HARNESS WITH SPLICE POINTS	CODE	SEE PAGE	WIRE HARNESS WITH SPLICE POINTS
I15	44	CONSOLE BOX WIRE			

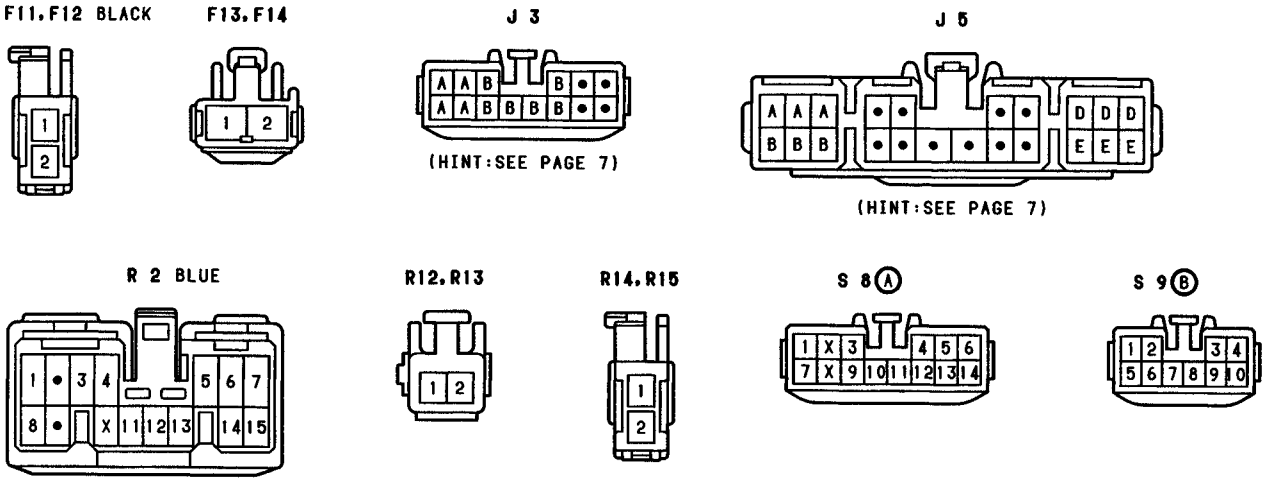

SERVICE HINTS

R 3(B) RADIO AND PLAYER

(B) 3–GROUND : APPROX. **12** VOLTS WITH IGNITION SW AT **ON** OR **ACC** POSITION
(B) 4–GROUND : ALWAYS APPROX. **12** VOLTS
(B) 7–GROUND : ALWAYS CONTINUITY

○ : PARTS LOCATION

CODE	SEE PAGE	CODE		SEE PAGE	CODE	SEE PAGE
F11	36 (W/G)	**R 3**	B	33	**R14**	36 (W/G)
F12	36 (W/G)	**R 4**	A	33	**R15**	36 (W/G)
J 3	33	**R12**		36 (W/G)		
J 5	36	**R13**		36 (W/G)		

⬭ : JUNCTION BLOCK AND WIRE HARNESS CONNECTOR

CODE	SEE PAGE	JUNCTION BLOCK AND WIRE HARNESS (CONNECTOR LOCATION)
1C	20	COWL WIRE AND J/B NO. 1 (INSTRUMENT PANEL LEFT)
1K		
1L		
2G	22	COWL WIRE AND J/B NO. 2 (ENGINE COMPARTMENT LEFT)

▭ : CONNECTOR JOINING WIRE HARNESS AND WIRE HARNESS

CODE	SEE PAGE	JOINING WIRE HARNESS AND WIRE HARNESS (CONNECTOR LOCATION)
IG1	42	FLOOR NO. 1 WIRE AND INSTRUMENT PANEL WIRE
IH1	42	FRONT DOOR LH WIRE AND INSTRUMENT PANEL WIRE
II2	42	INSTRUMENT PANEL WIRE AND COWL WIRE
IT2	44	FRONT DOOR RH WIRE AND INSTRUMENT PANEL WIRE
IU1	44	FLOOR NO. 2 WIRE AND INSTRUMENT PANEL WIRE
Bb1	50 (W/G)	LUGGAGE ROOM NO. 1 WIRE AND FLOOR NO. 1 WIRE
Bc3	50 (W/G)	BACK DOOR NO. 1 WIRE AND FLOOR NO. 1 WIRE
Bd1	50 (W/G)	BACK DOOR NO. 1 WIRE AND BACK DOOR NO. 2 WIRE

▽ : GROUND POINTS

CODE	SEE PAGE	GROUND POINTS LOCATION
IH	42	INSTRUMENT PANEL BRACE RH

F11, F12 BLACK



J 3

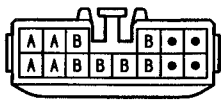

(HINT:SEE PAGE 7)

J 5

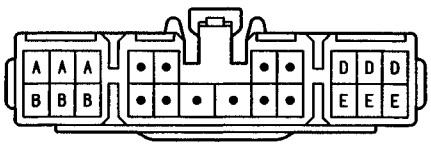

(HINT:SEE PAGE 7)

R 3 (B) BLUE

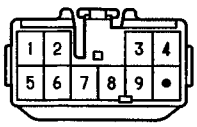

R 4 (A) BLUE

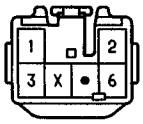

R12, R13

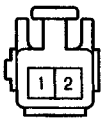

R14, R15

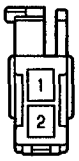

RADIO AND PLAYER (W/G 6 SPEAKER)

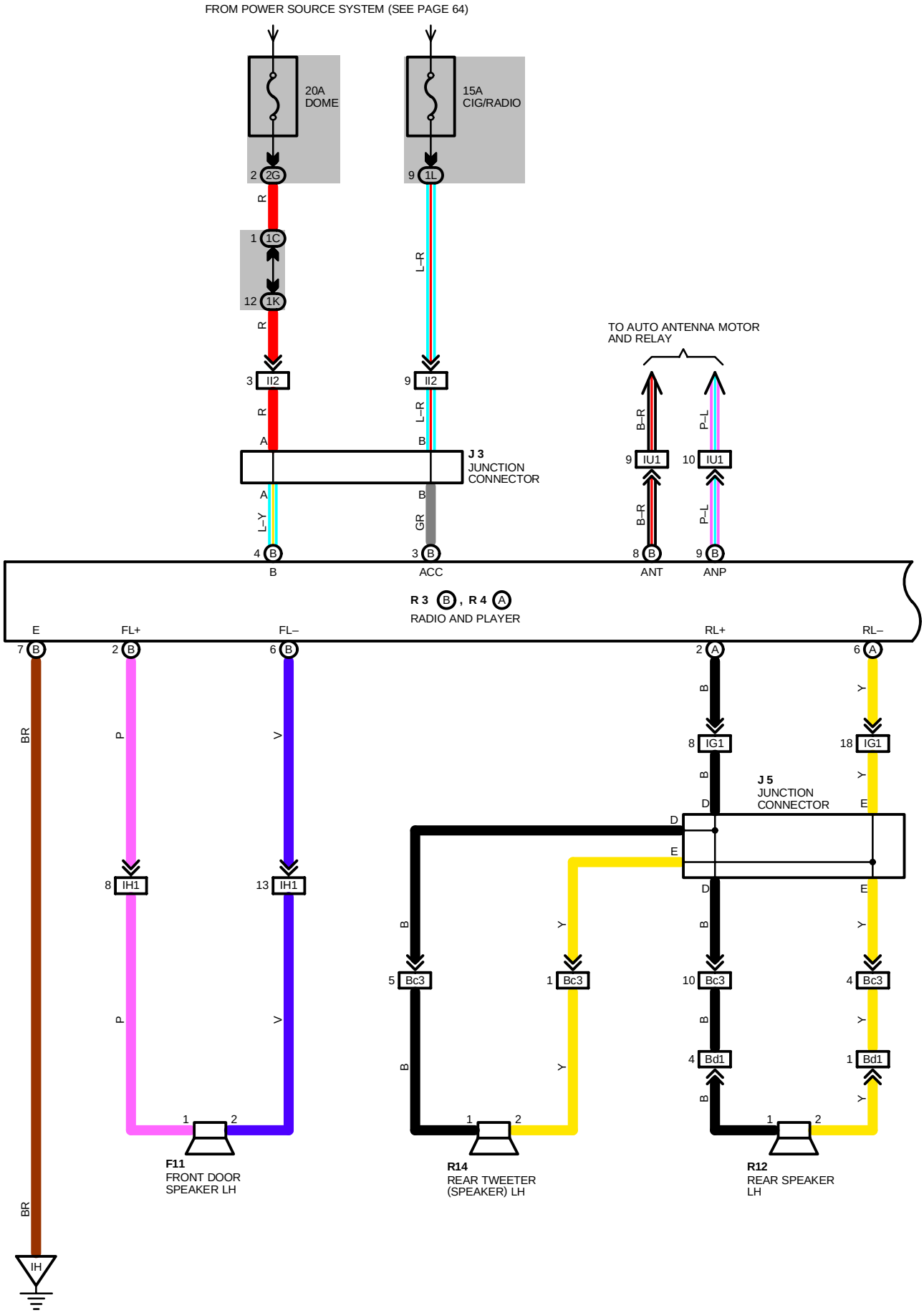

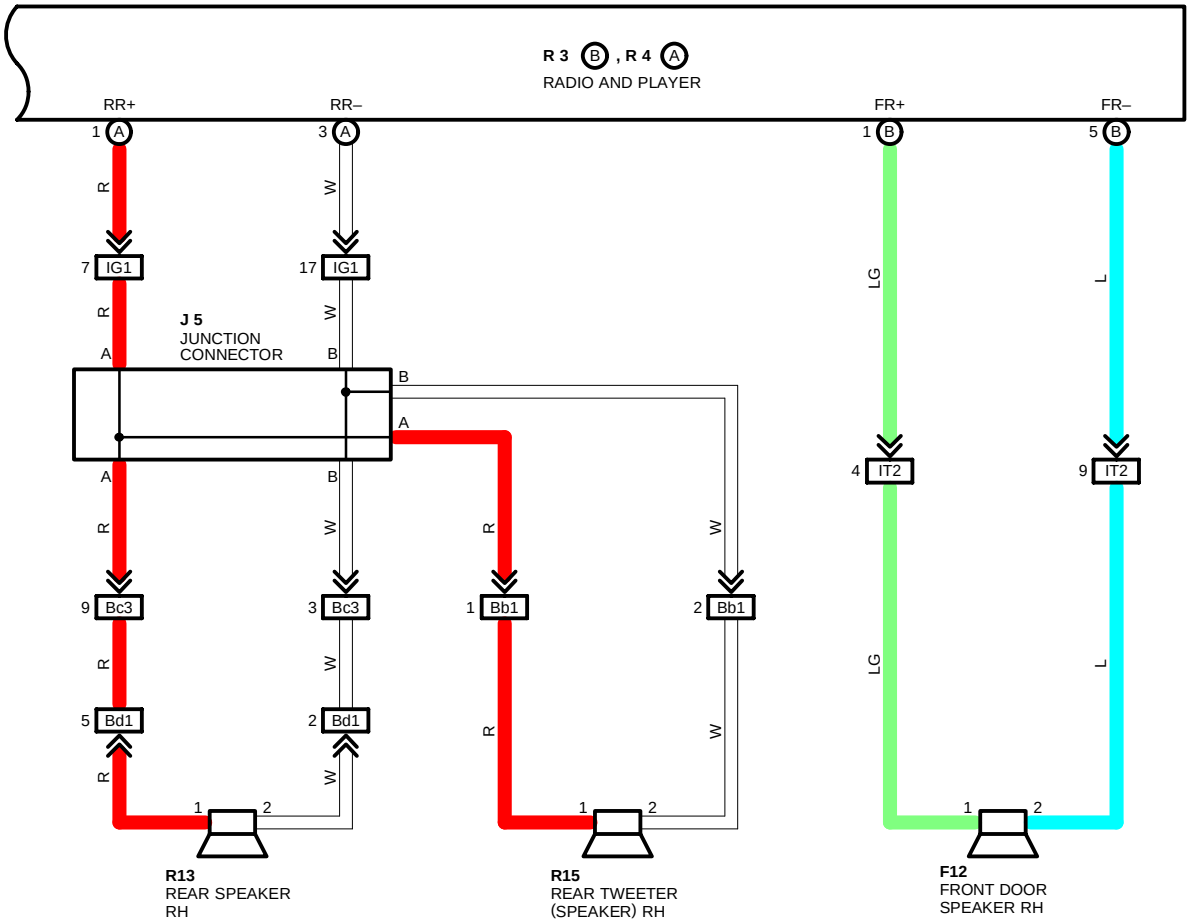
R 3 B , R 4 A
RADIO AND PLAYER
RR+
RR–
FR+
FR–
1 A
3 A
1 B
5 B
R
W
LG
L
7 IG1
17 IG1
4 IT2
9 IT2
J 5
JUNCTION
CONNECTOR
A
B
9 Bc3
3 Bc3
1 Bb1
2 Bb1
5 Bd1
2 Bd1
1
2
R13
REAR SPEAKER
RH
R15
REAR TWEETER
(SPEAKER) RH
F12
FRONT DOOR
SPEAKER RH

COMBINATION METER

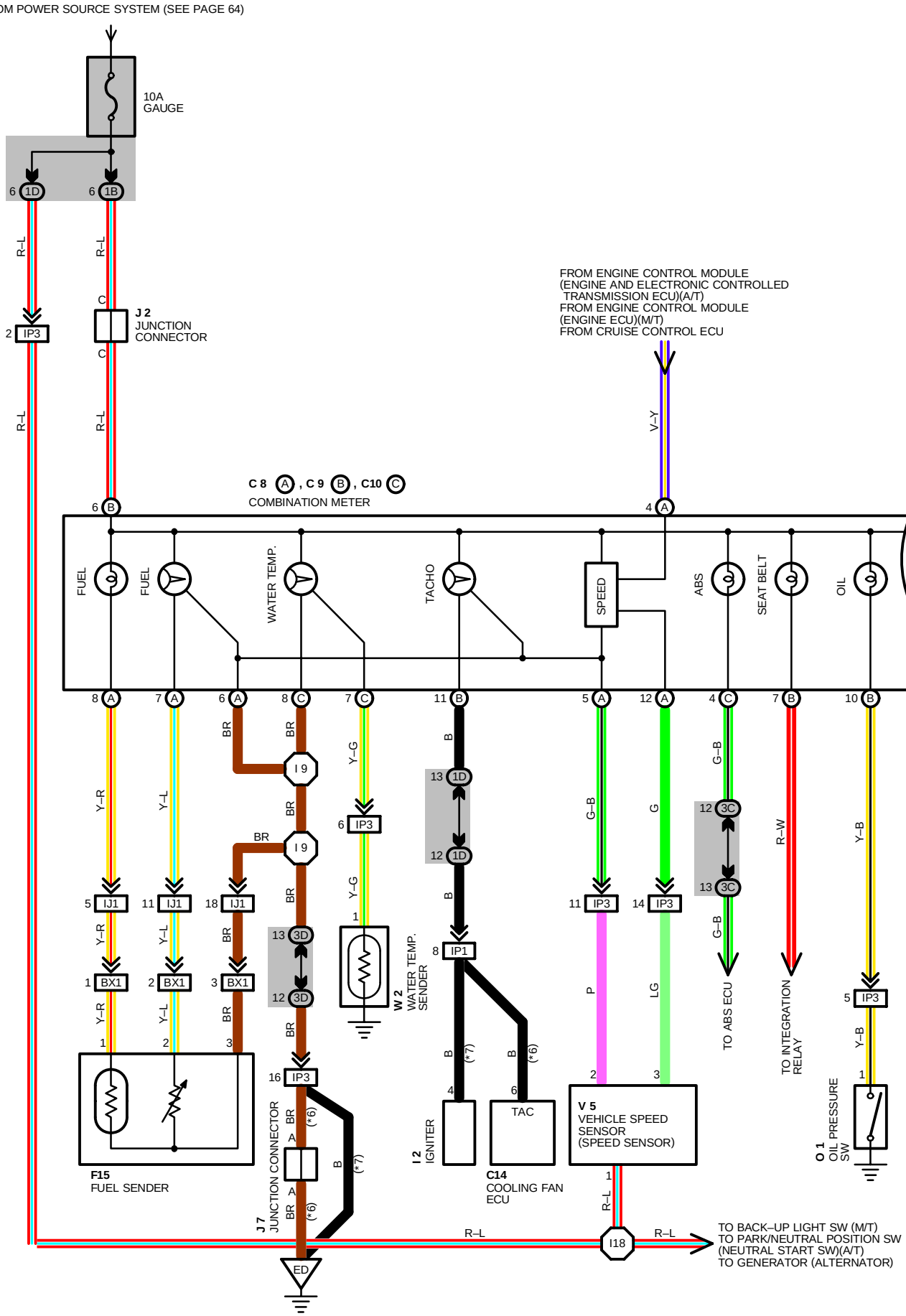

*1 : W/O A/T INDICATOR LIGHT
*2 : W/ A/T INDICATOR LIGHT
*3 : MALFUNCTION INDICATOR LAMP (CHECK ENGINE WARNING LIGHT)
*4 : TMC MADE
*5 : TMM MADE
*6 : 1MZ–FE
*7 : 5S–FE

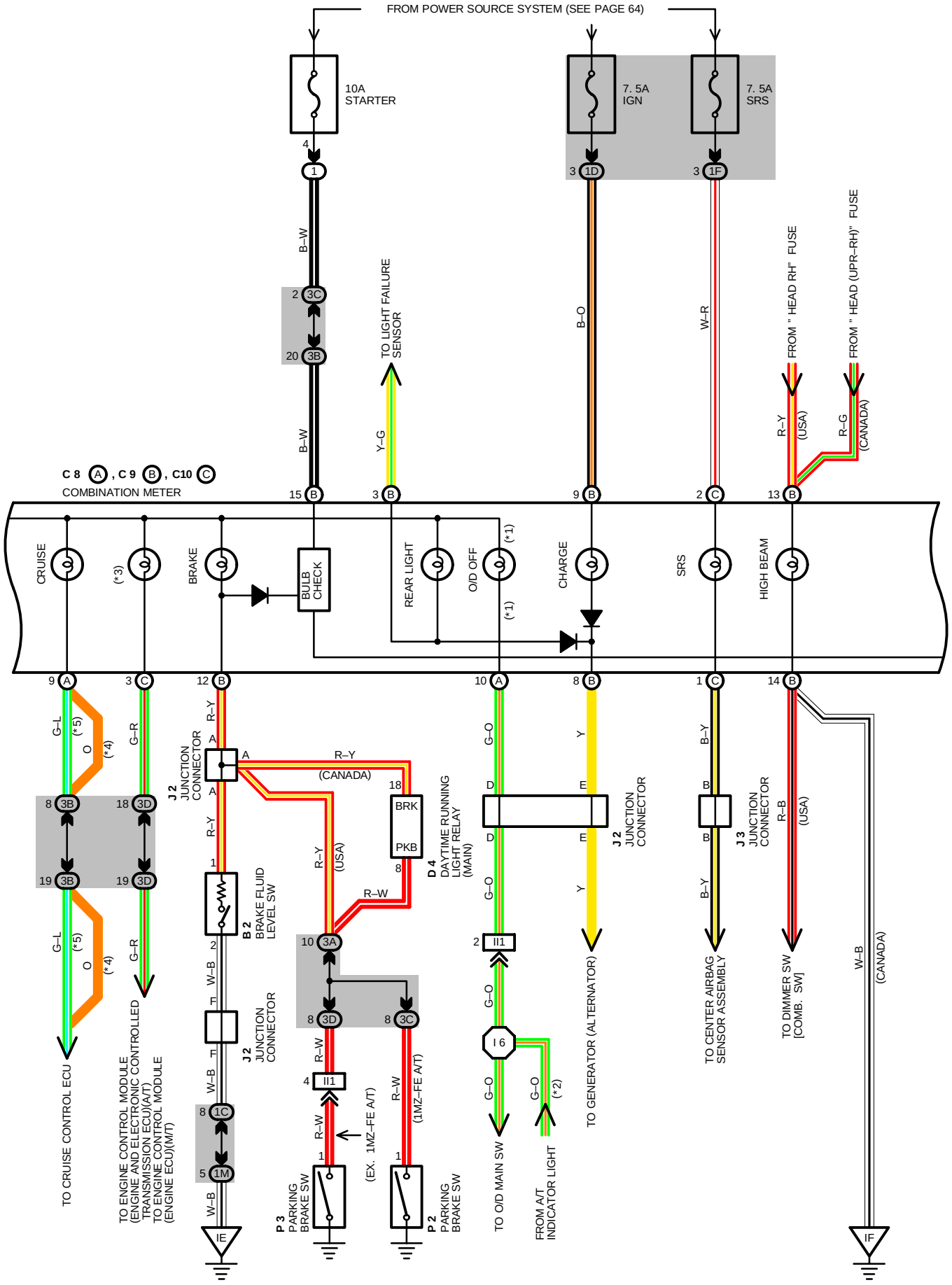

*1 : W/O A/T INDICATOR

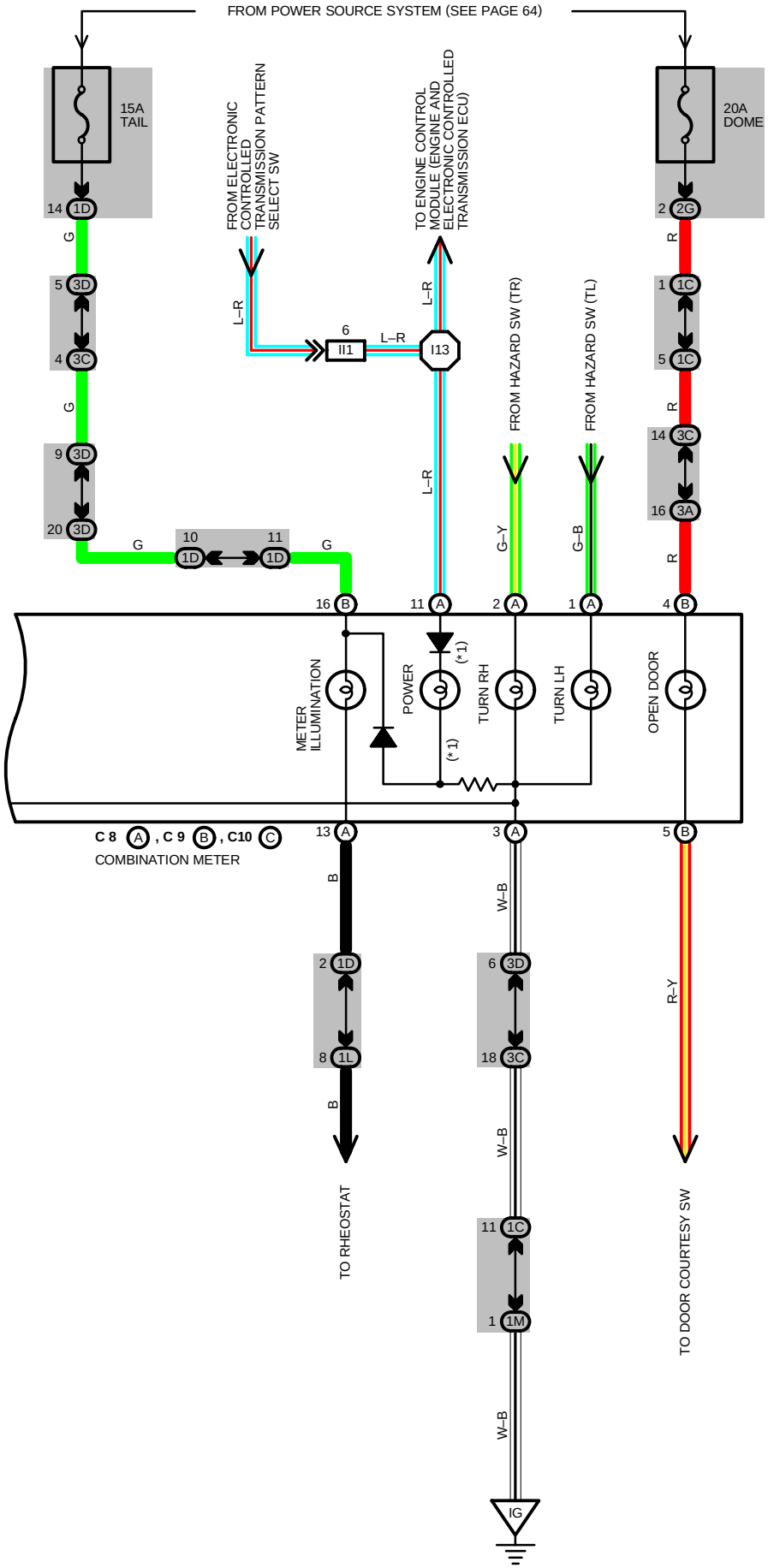

SERVICE HINTS

B 2 BRAKE FLUID LEVEL SW

1–2 : CLOSED WITH FLOAT DOWN

C 8(A), C 9(B), C10(C) COMBINATION METER

(A)2, **(B)**6, **(B)**9–GROUND : APPROX. **12** VOLTS WITH IGNITION SW AT **ON** POSITION
(A)3, **(B)**14, **(C)**8–GROUND : ALWAYS CONTINUITY

F15 FUEL SENDER

2–3 : APPROX. **3** WITH FUEL FULL
APPROX. **110.0** WITH FUEL EMPTY

O 1 OIL PRESSURE SW

1–GROUND : CLOSED WITH OIL PRESSURE BELOW **0.2** KG/CM^2 (**2.84** PSI, **19.61** KPA)

P 2 PARKING BRAKE SW (1MZ–FE A/T)

1–GROUND : CLOSED WITH PARKING BRAKE PEDAL DEPRESSED

P 3 PARKING BRAKE SW (EX. 1MZ–FE A/T)

1–GROUND : CLOSED WITH PARKING BRAKE LEVER PULLED UP

: PARTS LOCATION

CODE		SEE PAGE	CODE	SEE PAGE	CODE	SEE PAGE
B 2		28 (1MZ–FE), 30 (5S–FE)	**D 4**	32	**P 2**	33
C 8	A	32	**F15**	34 (S/D), 35 (C/P), 36 (W/G)	**P 3**	33
C 9	B	32	**I 2**	28 (1MZ–FE), 30 (5S–FE)	**V 5**	28 (1MZ–FE), 30 (5S–FE)
C10	C	32	**J 2**	33	**W 2**	28 (1MZ–FE), 30 (5S–FE)
C14		32	**O 1**	28 (1MZ–FE), 30 (5S–FE)		

: RELAY BLOCKS

CODE	SEE PAGE	RELAY BLOCKS (RELAY BLOCK LOCATION)
1	25	R/B NO. 1 (LEFT KICK PANEL)

: JUNCTION BLOCK AND WIRE HARNESS CONNECTOR

CODE	SEE PAGE	JUNCTION BLOCK AND WIRE HARNESS (CONNECTOR LOCATION)
1B	20	COWL WIRE AND J/B NO. 1 (INSTRUMENT PANEL LEFT)
1C		
1D		
1F		
1L		
1M		
2G	22	COWL WIRE AND J/B NO. 2 (ENGINE COMPARTMENT LEFT)
3A	24	COWL WIRE AND J/B NO. 3 (BEHIND COMBINATION METER)
3B		
3C		
3D		

: CONNECTOR JOINING WIRE HARNESS AND WIRE HARNESS

CODE	SEE PAGE	JOINING WIRE HARNESS AND WIRE HARNESS (CONNECTOR LOCATION)
II1	42	COWL WIRE AND INSTRUMENT PANEL WIRE
IJ1	42	FLOOR NO. 1 WIRE AND COWL WIRE
IP1	44	ENGINE WIRE AND COWL WIRE
IP3		
BX1	46 (S/D)	FUEL GAUGE WIRE AND FLOOR NO. 1 WIRE
	48 (C/P)	
	50 (W/G)	

: GROUND POINTS

CODE	SEE PAGE	GROUND POINTS LOCATION
ED	38 (1MZ–FE)	INTAKE MANIFOLD LH
	40 (5S–FE)	
IE	42	LEFT KICK PANEL
IF		
IG	42	INSTRUMENT PANEL BRACE LH

: SPLICE POINTS

CODE	SEE PAGE	WIRE HARNESS WITH SPLICE POINTS	CODE	SEE PAGE	WIRE HARNESS WITH SPLICE POINTS
I 6	44	INSTRUMENT PANEL WIRE	**I13**	44	COWL WIRE
I 9	44	COWL WIRE	**I18**	44	ENGINE WIRE

COMBINATION METER

B 2 GRAY



C 6 GRAY



C 8 (A) BLUE

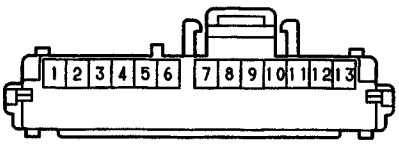

C 9 (B)

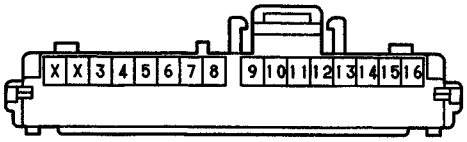

C10 (C) GRAY

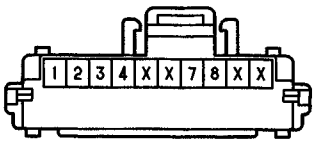

D 4 GRAY

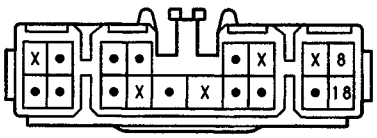

F15 DARK GRAY

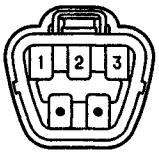

I 2 BLACK

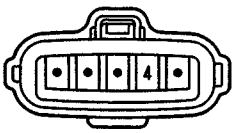

J 2 DARK GRAY

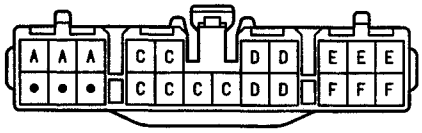

(HINT:SEE PAGE 7)

J 3

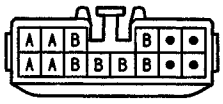

(HINT:SEE PAGE 7)

J 7 BLUE

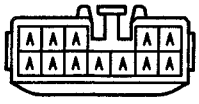

(HINT:SEE PAGE 7)

O 1 BLACK



P 2



P 3



V 5 GRAY



W 2 GRAY



: PARTS LOCATION

CODE	SEE PAGE	CODE	SEE PAGE	CODE	SEE PAGE
A 1	30	**E 5**	30 (5S–FE)		
A 2	30 (5S–FE)	**R 1**	30 (5S–FE)		

: RELAY BLOCKS

CODE	SEE PAGE	RELAY BLOCKS (RELAY BLOCK LOCATION)
5	26	R/B NO. 5 (ENGINE COMPARTMENT LEFT)

: JUNCTION BLOCK AND WIRE HARNESS CONNECTOR

CODE	SEE PAGE	JUNCTION BLOCK AND WIRE HARNESS (CONNECTOR LOCATION)
1A	20	COWL WIRE AND J/B NO. 1 (INSTRUMENT PANEL LEFT)
2B	22	ENGINE ROOM MAIN WIRE AND J/B NO. 2 (ENGINE COMPARTMENT LEFT)
2E		
3A	24	COWL WIRE AND J/B NO. 3 (BEHIND COMBINATION METER)
3C		

: CONNECTOR JOINING WIRE HARNESS AND WIRE HARNESS

CODE	SEE PAGE	JOINING WIRE HARNESS AND WIRE HARNESS (CONNECTOR LOCATION)
EA1	40 (5S–FE)	ENGINE ROOM MAIN WIRE AND ENGINE ROOM NO. 3 WIRE

: GROUND POINTS

CODE	SEE PAGE	GROUND POINTS LOCATION
EB	40 (5S–FE)	FRONT LEFT FENDER

: SPLICE POINTS

CODE	SEE PAGE	WIRE HARNESS WITH SPLICE POINTS	CODE	SEE PAGE	WIRE HARNESS WITH SPLICE POINTS
E 5	40 (5S–FE)	ENGINE ROOM MAIN WIRE			

RADIATOR FAN AND CONDENSER FAN (5S–FE)

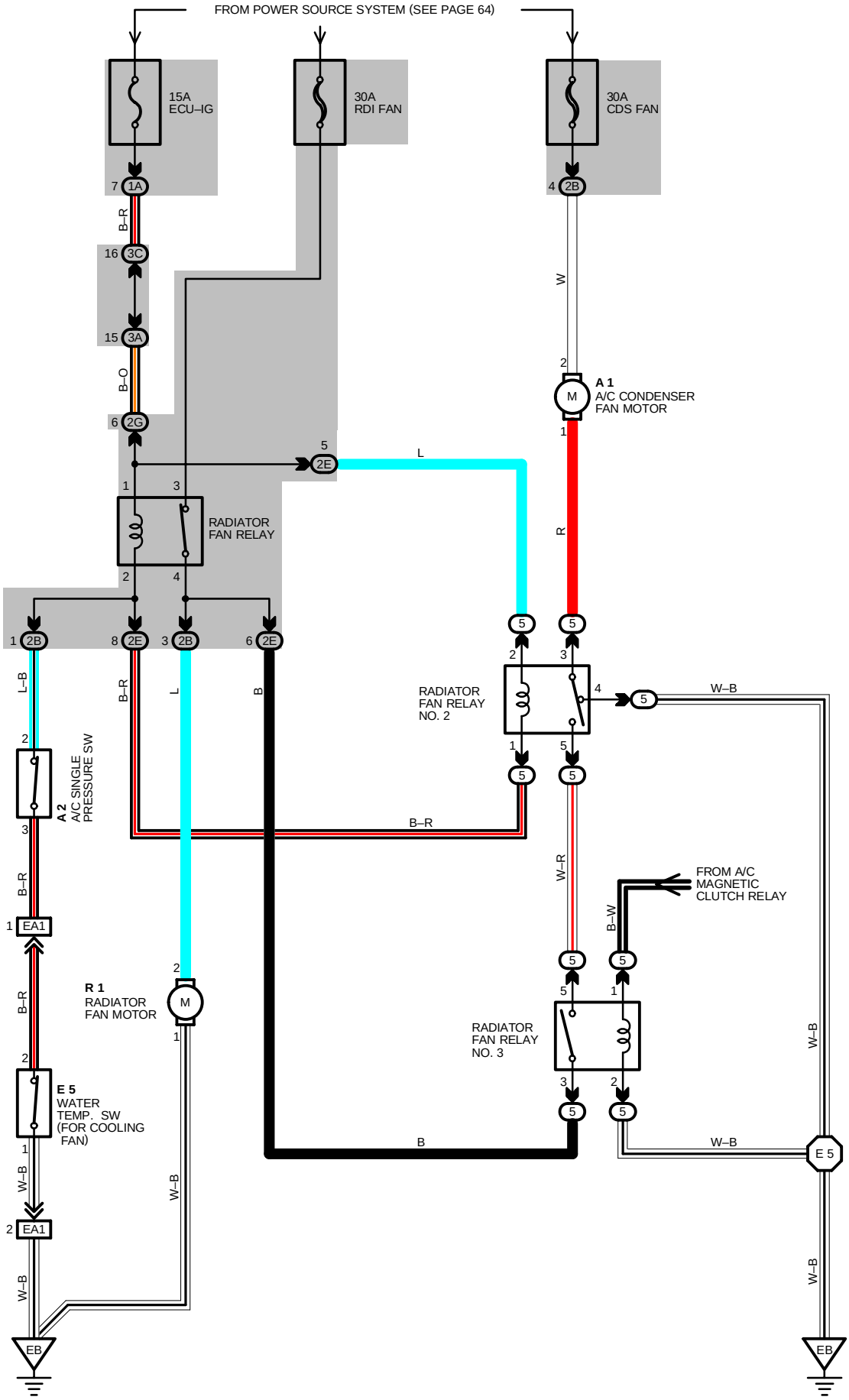

SYSTEM OUTLINE

FAN MOTOR OPERATION

WITH THE IGNITION SW IS TURNED ON, CURRENT FLOWS FROM **ECU–IG** FUSE TO RADIATOR FAN RELAY NO. 1 (COIL SIDE) AND RADIATOR FAN RELAY NO. 2 (COIL SIDE) → **TERMINAL 2** OF THE A/C SINGLE PRESSURE SW → **TERMINAL 3** → **TERMINAL 2** OF THE WATER TEMP. SW → **TERMINAL 1** → **GROUND**, AND RADIATOR FAN RELAY NO. 1 AND NO. 2 ARE TURNED ON.

* RADIATOR FAN MOTOR OPERATION

  WHEN THE IGNITION SW IS TURNED ON, RADIATOR FAN RELAY NO. 1 IS TURNED ON. IF AT THIS TIME THE ENGINE COOLANT TEMPERATURE IS APPROX. **90**˚C (**194**˚F) OR HIGHER, THE WATER TEMP. SW IS TURNED OFF, RADIATOR FAN RELAY NO. 1 IS TURNED OFF.

  AS A RESULT, CURRENT FROM THE **RDI FAN** FUSE TO RADIATOR FAN RELAY NO. 1 (POINT SIDE) → **TERMINAL 2** OF THE RADIATOR FAN MOTOR → **TERMINAL 1** → **GROUND**, THUS ACTIVATING THE ROTATION OF THE RADIATOR FAN MOTOR.

* LOW SPEED OPERATION

  WHEN THE IGNITION SW IS TURNED ON AND THE A/C ACTIVATED, RADIATOR FAN RELAY NO. 1 AND RADIATOR FAN RELAY NO. 2 ARE TURNED ON, CURRENT FLOWS FROM A/C MAGNETIC CLUTCH RELAY (POINT SIDE) TO RADIATOR FAN RELAY NO. 3 (COIL SIDE) → **GROUND**, AND RADIATOR FAN RELAY NO. 3 IS TURNED ON.

  AS A RESULT, CURRENT FLOWS FROM **CDS FAN** FUSE TO **TERMINAL 2** OF THE A/C CONDENSER FAN MOTOR → **TERMINAL 1** → RADIAOTR FAN RELAY NO. 2 (POINT SIDE) → RADIATOR FAN RELAY NO. 3 (POINT SIDE) → **TERMINAL 2** OF THE RADIATOR FAN MOTOR → **TERMINAL 1** → **GROUND**, FLOWING TO EACH FAN MOTOR IN SERIES, CAUSING THE FAN TO AT LOW SPEED.

* HIGH SPEED OPERATION OF THE FAN MOTOR DUARING A/C OPERATION

  WHEN THE A/C OPERATION, THE REFRIGERRANT PRESSURE BECOME HIGHER THAN OR DINARY LEVEL (APPROX. **15.58** KG/CM^2 (**221.2** PSI, **1527** KPA)) THE A/C SINGLE PRESSURE SW IS TURNED OFF. AS A RESULT, RADIATOR FAN RELAY NO. 1 AND RADIATOR FAN RELAY NO. 2 ARE TURNED OFF, AND CURRENT FLOWS FROM **RDI** FUSE TO RADIATOR FAN RELAY NO. 1 (POINT SIDE) → **TERMINAL 2** OF THE RADIATOR FAN MOTOR → **TERMINAL 1** → **GROUND,** AND CURRENT FLOWS FROM **CDS FAN** FUSE TO **TERMINAL 2** OF THE A/C CONDENSER FAN MOTOR → **TERMINAL 1** → RADIATOR FAN RELAY NO. 2 (POINT SIDE) → **GROUND**, AND TO EACH FAN MOTOR IN PARALLEL, THUS CAUSING THE FAN MOTORS OPERATE HIGH SPEED.

  NOTE THAT, BECAUSE THE CURRENT FLOWS IN THE SAME MENNER EVEN IF THE ENGINE COOLANT TEMPERATURE IS APPROX. **90**˚C (**194**˚F) OR HIGHER, THE FAN MOTOR OPERATE AT HIGH SPEED.

SERVICE HINTS

A 2 A/C SINGLE PRESSURE SW

2–3 : OPEN ABOVE APPROX. **15.58** KG/CM^2 (**221.2** PSI, **1527** KPA)
CLOSE BELOW APPROX. **15.56** KG/CM^2 (**178.4** PSI, **1231** KPA)

A 1 BLACK



A 2 BLACK

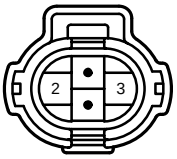

E 5



R 1 GRAY

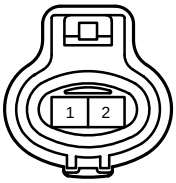

ELECTRONICALLY CONTROLLED HYDRAULIC COOLING FAN (1MZ–FE)

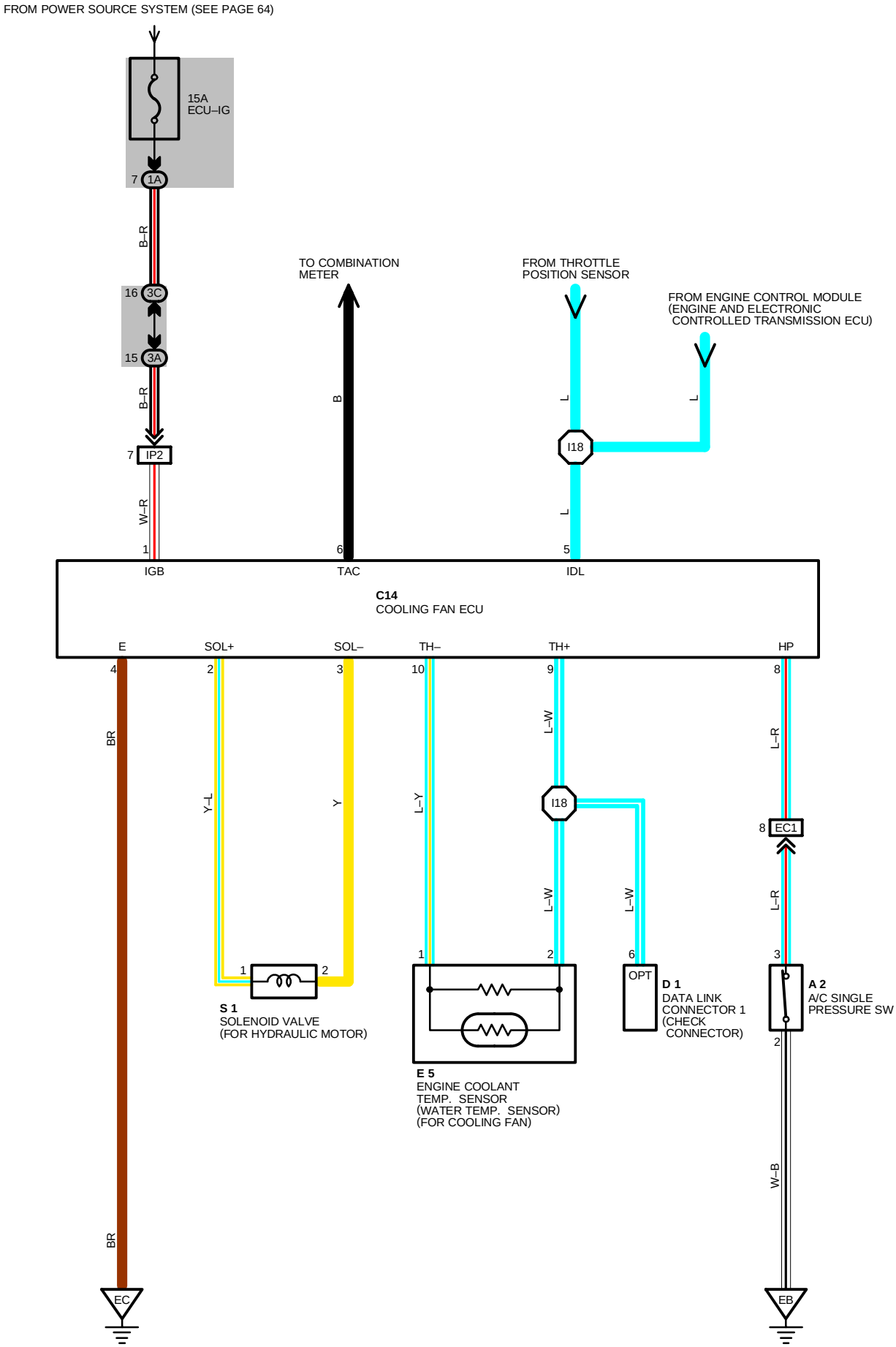

SYSTEM OUTLINE

THE COOLING FAN ECU RECEIVES VARIOUS SIGNAL, I.E., THE ENGINE RPM SIGNAL FROM THE IGNITER, COOLANT TEMPERATURE SIGNAL FROM THE ENGINE COOLANT TEMP. SENSOR (WATER TEMP. SENSOR), A/C REFRIGERANT PRESSURE SIGNAL FROM A/C SINGLE PRESSURE SW.

THE COOLING FAN ECU JUDGES THE ENGINE BASED ON SIGNALS FROM ABOVE MENTION, DRIVES THE SOLENOID VALVE AND CONTROLS THE SPEED OF THE COOLING FAN STEPLESSLY

FAIL–SAFE FUNCTION

WHEN THE MALFANCTION IS DETECTED BY THE ENGINE COOLANT TEMP. SENSOR (WATER TEMP. SENSOR) OR SOLENOID VALVE, THE FAIL–SAFE FUNCTION OF THE COOLING FAN ECU JUDGES THE SITUATION TO ALLOWS THE COOLING SYSTEM TO CONTINUE OPERATION.

SERVICE HINTS

A 2 A/C SINGLE PRESSURE SW

2–3 : OPEN ABOVE APPROX. **15.58**KG/CM^2 (**221.2**PSI, **1527**KPA)
CLOSED BELOW APPROX. **12.56** KG/CM^2 (**178.4**PSI, **1231**KPA)

C14 COOLING FAN ECU

1–GROUND : APPROX. **12** VOLTS WITH THE IGNITION SW ON
9–10 : **2.5** VOLTS AT **20**˚C (**68**˚F) AND IGNITION SW ON
1.2 VOLTS AT **80**˚C (**176**˚F) AND IGNITION SW ON
8– 4 : **10–14** VOLTS AT A/C PRESSURE SW ON (OPEN)
0–3 VOLTS AT A/C PRESSURE SW OFF (CLOSE)
4–GROUND : ALWAYS CONTINUITY

E 5 ENGINE COOLANT TEMP. SENSOR (WATER TEMP. SENSOR) (FOR COOLING FAN)

1–2 : **1.5**K AT **80**˚C (**176**˚F)
0.7K AT **110**˚C (**230**˚F)

: PARTS LOCATION

CODE	SEE PAGE	CODE	SEE PAGE	CODE	SEE PAGE
A 2	28	**D 1**	28	**S 1**	29
C14	32	**E 5**	30		

: JUNCTION BLOCK AND WIRE HARNESS CONNECTOR

CODE	SEE PAGE	JUNCTION BLOCK AND WIRE HARNESS (CONNECTOR LOCATION)
1A	20	COWL WIRE AND J/B NO. 1 (INSTRUMENT PANEL LEFT)
3A	24	COWL WIRE AND J/B NO. 3 (BEHIND COMBINATION METER)
3C		

: CONNECTOR JOINING WIRE HARNESS AND WIRE HARNESS

CODE	SEE PAGE	JOINING WIRE HARNESS AND WIRE HARNESS (CONNECTOR LOCATION)
EC1	38 (1MZ–FE)	ENGINE WIRE AND ENGINE ROOM MAIN WIRE
IP2	44	ENGINE WIRE AND COWL WIRE

: GROUND POINTS

CODE	SEE PAGE	GROUND POINTS LOCATION
EB	38 (1MZ–FE)	FRONT LEFT FENDER
EC	38 (1MZ–FE)	INTAKE MANIFOLD RH

: SPLICE POINTS

CODE	SEE PAGE	WIRE HARNESS WITH SPLICE POINTS	CODE	SEE PAGE	WIRE HARNESS WITH SPLICE POINTS
I18	44	ENGINE WIRE			

A 2 BLACK

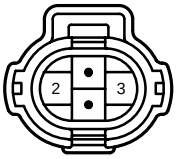

C14 GRAY

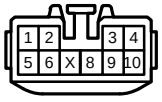

D 1 BLACK

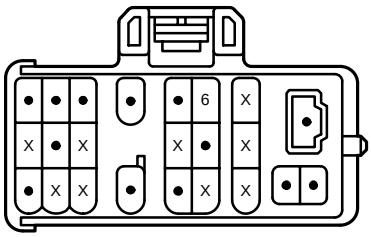

E 5 BROWN



S 1



AIR CONDITIONING (PUSH CONTROL SW TYPE)

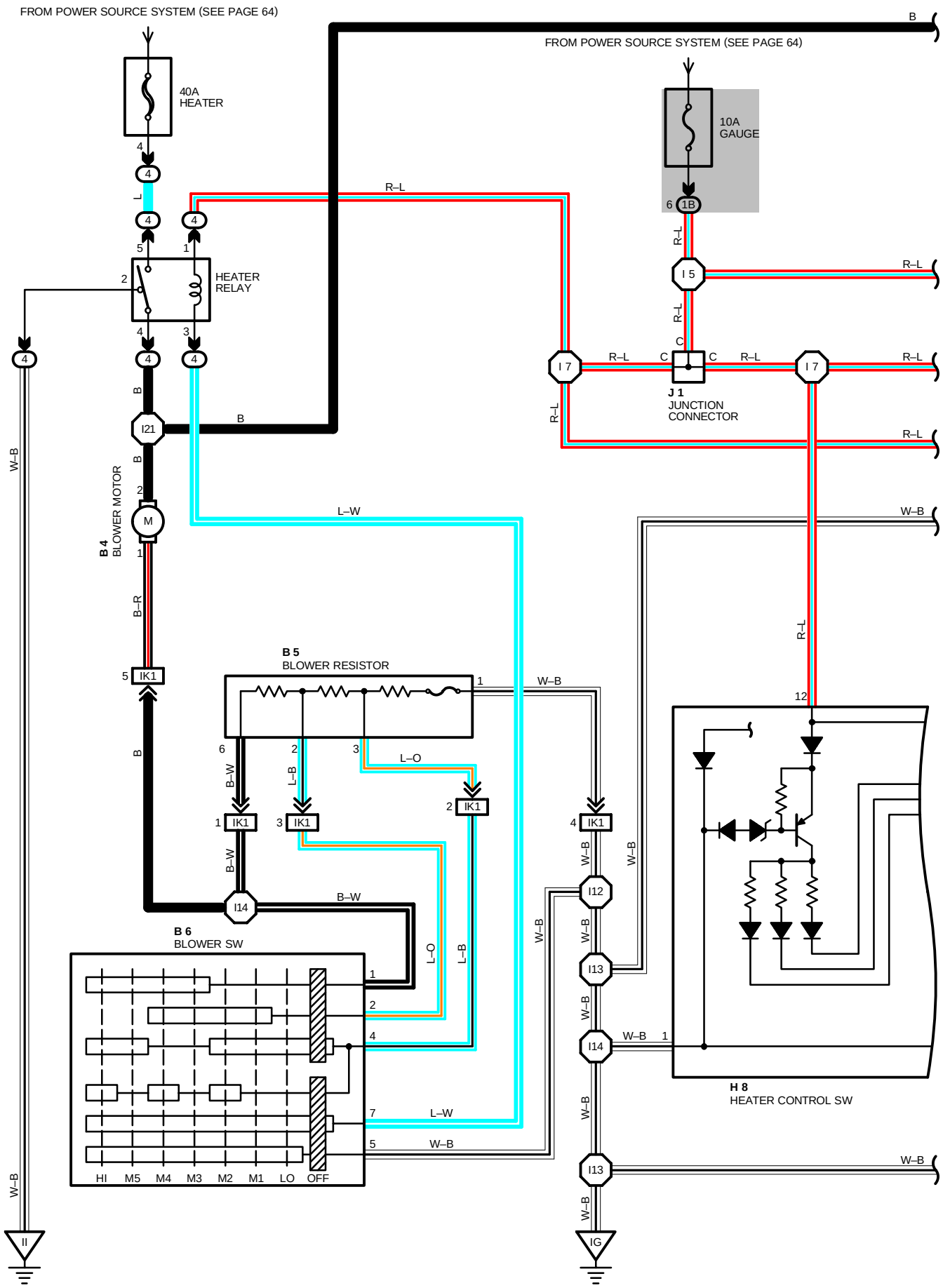

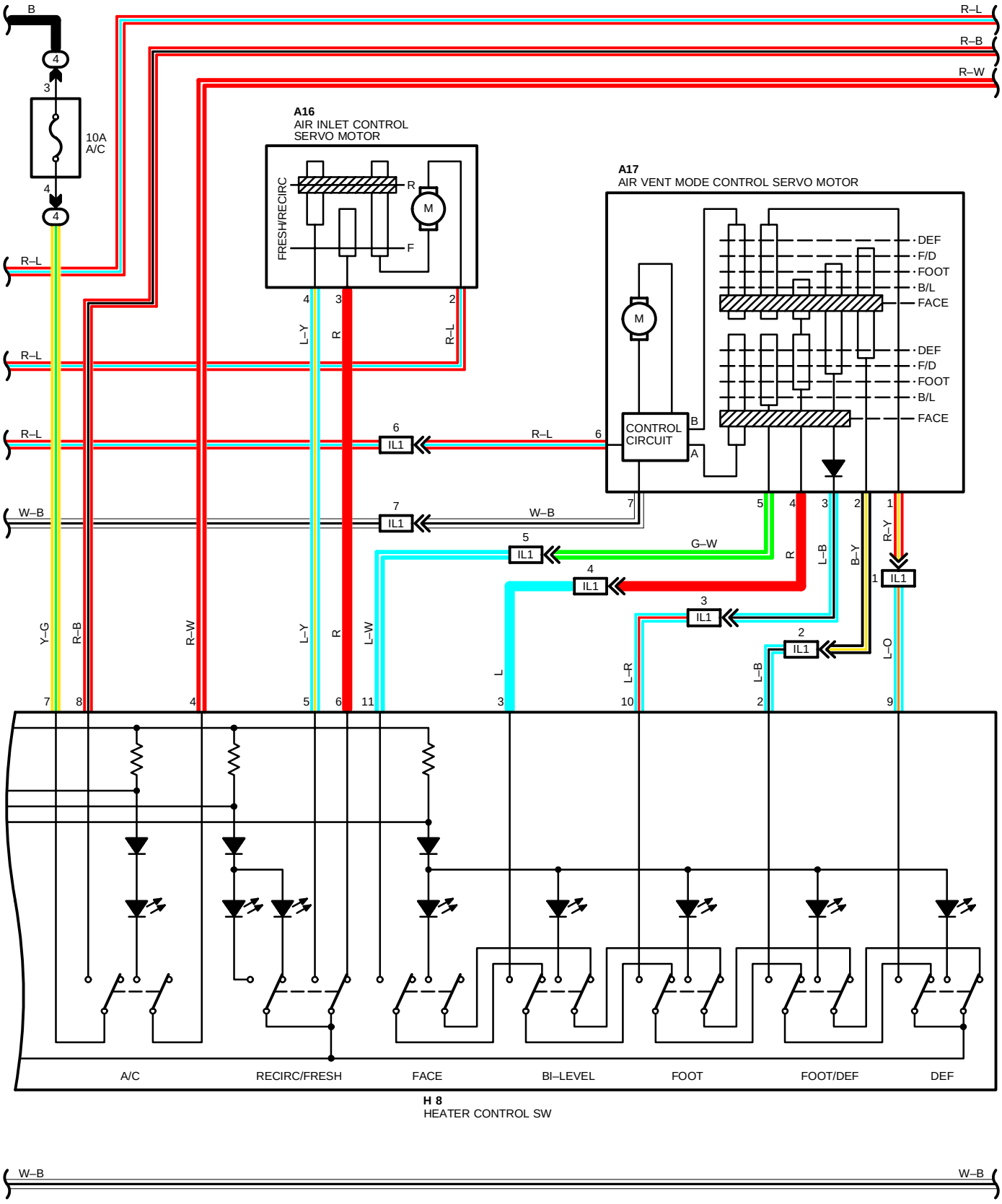

H 8
HEATER CONTROL SW

AIR CONDITIONING (PUSH CONTROL SW TYPE)

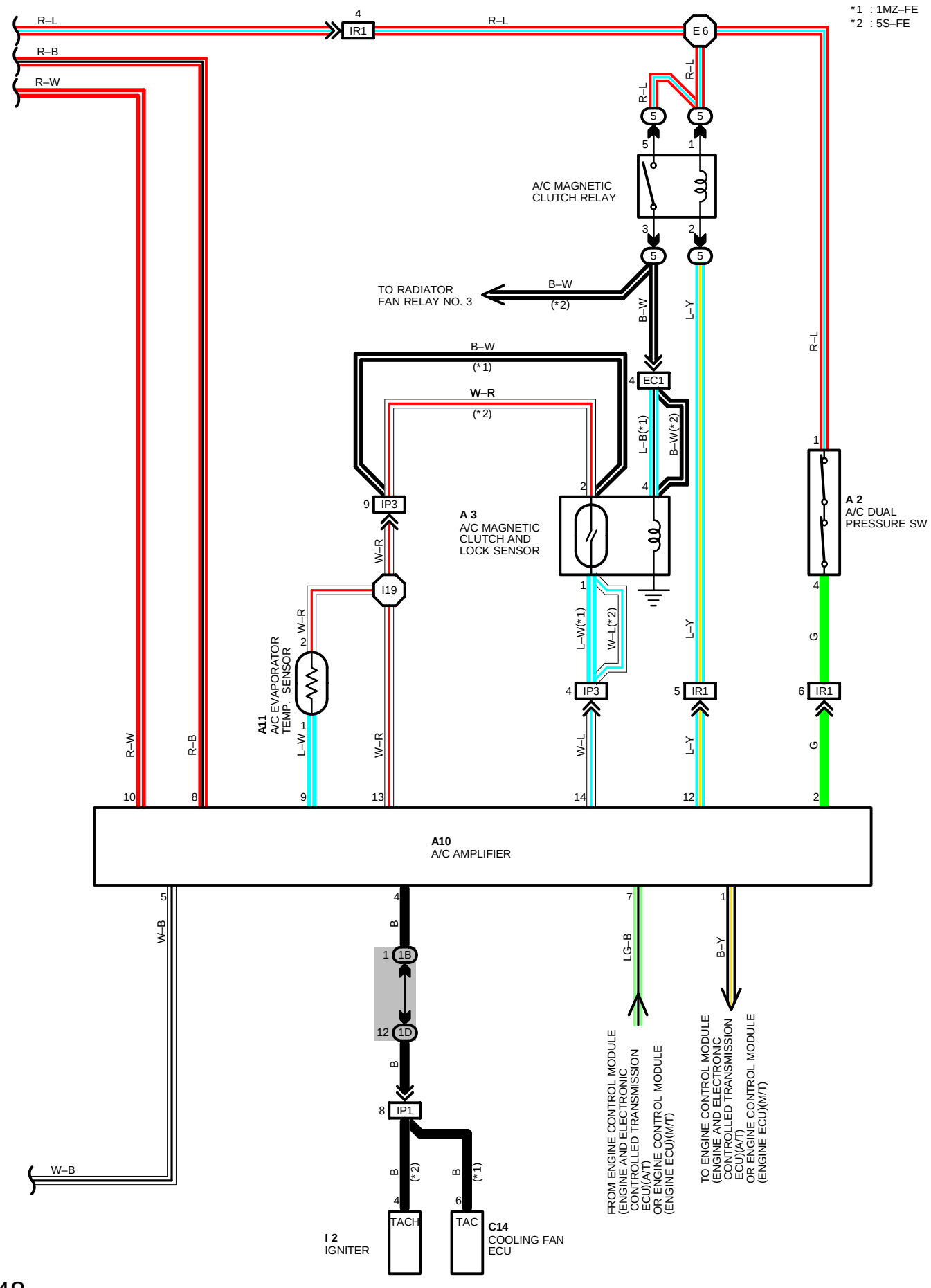

SYSTEM OUTLINE

1. AIR INLET CONTROL SERVO MOTOR OPERATION (FOR PUSH SW TYPE)

(SWITCHING FROM FRESH TO RECIRC)

WITH THE IGNITION SW ON, CURRENT FROM THE **GAUGE** FUSE FLOWS TO **TERMINAL 1** OF THE SERVO MOTOR. WHEN THE RECIRC SW IS TURNED ON, THE CURRENT FLOWS FROM SERVO MOTOR → **TERMINAL 3** → **TERMINAL 5** OF THE HEATER CONTROL SW → **TERMINAL 1** → **GROUND**, THE MOTOR ROTATES AND THE DAMPER MOVES TO THE RECIRC SIDE. WHEN IT IS IN THE RECIRC POSITION, THE CIRCUIT IS CUT INSIDE THE SERVO MOTOR AND THE DAMPER STOPS IN THAT POSITION.

WHEN THE CIRCUIT FOR THE INDICATOR LIGHT, CURRENT FLOWS FROM THE **GAUGE** FUSE → **TERMINAL 12** OF THE HEATER CONTROL SW → INDICATOR LIGHT → **TERMINAL 1** → GROUND AND THE INDICATOR LIGHT CONTINUES TO LIGHT UP WHILE THE RECIRC SW IS ON.

(SWITCHING FROM RECIRC TO FRESH)

WHEN THE IGNITION IS ON AND THE FRESH SW IS TURNED ON, CURRENT FLOWS FROM **TERMINAL 2** OF THE SERVO MOTOR → **TERMINAL 6** OF THE HEATER CONTROL SW → **TERMINAL 1** → **GROUND**, THE MOTOR ROTATES AND THE DAMPER MOVES TO THE FRESH SIDE. WHEN THE DAMPER IS IN THE FRESH POSITION, THE CIRCUIT IS CUT INSIDE THE SERVO MOTOR AND THE DAMPER STOPS IN THAT POSITION.

2. OPERATION OF AIR VENT MODE CONTROL SERVO MOTOR

WHEN THE IGNITION SW ON, CURRENT FLOWS FROM THE **GAUGE** FUSE TO **TERMINAL 12** OF THE HEATER CONTROL SW, **TERMINAL 6** OF THE AIR VENT MODE CONTROL SERVO MOTOR.

WHEN THE DAMPER IS IN FACE POSITION AND THE BI–LEVEL OF THE HEATER CONTROL SW IS THEN TURNED ON, CURRENT FLOWS FROM **TERMINAL 3** OF THE HEATER CONTROL SW → **TERMINAL 4** OF THE AIR VENT MODE CONTROL SERVO MOTOR SO THAT A SINGAL THAT THE GROUND CIRCUIT IS ACTIVATED IS INPUT TO **TERMINAL "B"** OF THE CONTROL CIRCUIT INSIDE THE AIR VENT MODE CONTROL SERVO MOTOR.

SIMULTANEOUSLY, A SIGNAL THAT THE GROUND CIRCUIT IS NOT ACTIVATED IS INPUT TO **TERMINAL "A"** OF THE CONTROL CIRCUIT INSIDE THE SERVO MOTOR. THESE TWO SIGNALS ACTIVATE THE CONTROL CIRCUIT SO THAT CURRENT FROM THE **GAUGE** FUSE TO THE SERVO MOTOR, CAUSING THE SERVO MOTOR TO OPERATE AND THE DAMPER TO MOVE TO BI–LEVEL POSITION. WHEN THE DAMPER REACHES BI–LEVEL POSITION, A GROUND CUT SIGNAL IS INPUT TO **TERMINAL "B"** OF THE CONTROL CIRCUIT, THE CONTROL CIRCUIT OPERATES, THE SERVO MOTOR STOPS ROTATING AND THE DAMPER STOPS AT BI–LEVEL.

WHEN ANOTHER MODE POSITION IS SWITCHED TO, INPUT OF SIGNALS TO **TERMINAL "A"** AND **TERMINAL "B"** OF THE CONTROL CIRCUIT THAT GROUND IS MADE OR GROUND IS NOT MADE (AS EXPLAINED ABOVE) ACTIAVTES THE CONTROL CIRCUIT AND MOVES THE SERVO MOTOR TO THE DESIRED POSITION.

3. AIR CONDITIONING OPERATION

WHEN THE IGNITION SW ON, CURRENT FLOWS FROM **GAUGE** FUSE TO **TERMINAL 12** OF THE HEATER CONTROL SW, **TERMINAL 6** OF THE AIR VENT MODE CONTROL SERVO MOTOR.

WHEN THE BLOWER SW IS ON, CURRENT FLOWS FROM THE **GAUGE** FUSE → HEATER RELAY (COIL SIDE) → **TERMINAL 7** OF THE BLOWER SW → **TERMINAL 5** → **GROUND**, ACTIVATING THE HEATER RELAY. THIS CAUSES CURRENT TO FLOW FROM THE **HEATER** FUSE TO THE HEATER RELAY (POINT SIDE) → **A/C** FUSE → **TERMINAL 7** OF THE HEATER CONTROL SW (A/C SW). IF THE HEATER CONTROL (A/C SW) IS THEN TURNED ON AT THIS TIME, A SIGNAL IS INPUT TO THE A/C AMPLIFIRE. THIS ACTIVATES THE A/C AMPLIFIER AND A/C MAGNETIC CLUTCH RELAY SO THAT CURRENT FLOWS FROM THE **GAUGE** FUSE TO THE A/C MAGNETIC CLUTCH RELAY (POINT SIDE) → A/C MAGNETIC CLUTCH, CAUSING THE COMPRESSOR TO OPERATE. THE VSV (FOR A/C IDLE–UP) IS TURNED ON SIMULTANEOUSLY TO PREVENT A DECREASE IN ENGINE SPEED DUE TO A/C OPERATION.

SERVICE HINTS

HEATER RELAY

(4)5– **(4)**4 : CLOSED WITH THE IGNITION SW ON AND BLOWER SW ON

A/C MAGNETIC CLUTCH RELAY

(4)5– **(4)**3 : CLOSED WITH THE IGNITION SW ON AND BLOWER SW ON AND A/C SW ON

A 2 A/C DUAL PRESSURE SW

1–4 : OPEN WITH PRESSURE **2.1** KG/CM (**30** PSI, **206** KPA) OR ABOVE **27** KG/CM (**384** PSI, **2646** KPA)

B 5 BLOWER RESISTOR

6–2 : APPROX. **1.12** Ω
2–3 : APPROX. **0.5** Ω
3–1 : APPROX. **0.2** Ω

AIR CONDITIONING (PUSH CONTROL SW TYPE)

: PARTS LOCATION

CODE	SEE PAGE	CODE	SEE PAGE	CODE	SEE PAGE
A 2	28 (1MZ–FE), 30 (5S–FE)	**A17**	32	**H 8**	33
A 3	28 (1MZ–FE), 30 (5S–FE)	**B 4**	32	**I 2**	30 (5S–FE)
A10	32	**B 5**	32	**J 1**	33
A11	32	**B 6**	32		
A16	32	**C14**	32		

: RELAY BLOCKS

CODE	SEE PAGE	RELAY BLOCKS (RELAY BLOCK LOCATION)
4	25	R/B NO. 4 (RIGHT KICK PANEL)
5	26	R/B NO. 5 (ENGINE COMPARTMENT LEFT)

: JUNCTION BLOCK AND WIRE HARNESS CONNECTOR

CODE	SEE PAGE	JUNCTION BLOCK AND WIRE HARNESS (CONNECTOR LOCATION)
1B	20	COWL WIRE AND J/B NO. 1 (INSTRUMENT PANEL LEFT)
1D		

: CONNECTOR JOINING WIRE HARNESS AND WIRE HARNESS

CODE	SEE PAGE	JOINING WIRE HARNESS AND WIRE HARNESS (CONNECTOR LOCATION)
EC1	38 (1MZ–FE) 40 (5S–FE)	ENGINE WIRE AND ENGINE ROOM MAIN WIRE
IK1	42	COWL WIRE AND A/C SUB WIRE
IL1	42	COWL WIRE AND SERVO MOTOR SUB WIRE
IP1	44	ENGINE WIRE AND COWL WIRE
IP3		
IR1	44	ENGINE ROOM MAIN WIRE AND COWL WIRE

: GROUND POINTS

CODE	SEE PAGE	GROUND POINTS LOCATION
IG	42	INSTRUMENT PANEL BRACE LH
II	42	RIGHT KICK PANEL

: SPLICE POINTS

CODE	SEE PAGE	WIRE HARNESS WITH SPLICE POINTS	CODE	SEE PAGE	WIRE HARNESS WITH SPLICE POINTS
E 6	38 (1MZ–FE) 40 (5S–FE)	ENGINE ROOM MAIN WIRE	**I12**	44	COWL WIRE
			I13		
I 5	44	COWL WIRE	**I14**		
I 7			**I19**		

A 2 BLACK

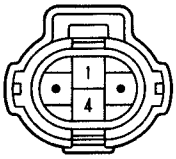

A 3 GRAY



A10

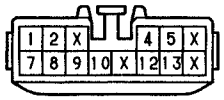

A11

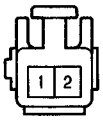

A16

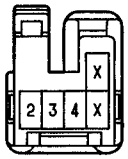

A17

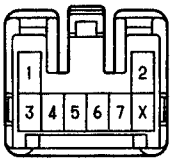

B 4

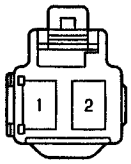

B 5

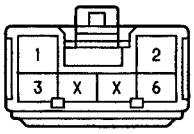

B 6 BLACK

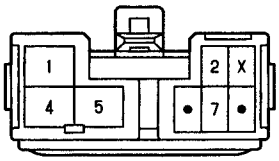

C14 GRAY

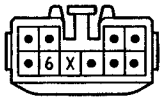

H 8 BLACK

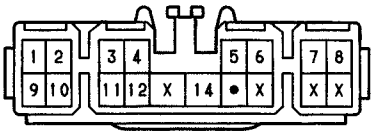

I 2 BLACK

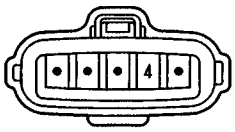

J 1 DARK GRAY

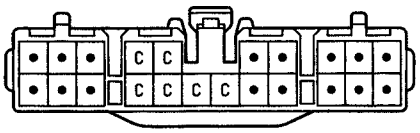

(HINT:SEE PAGE 7)

AIR CONDITIONING (LEVER CONTROL SW TYPE)

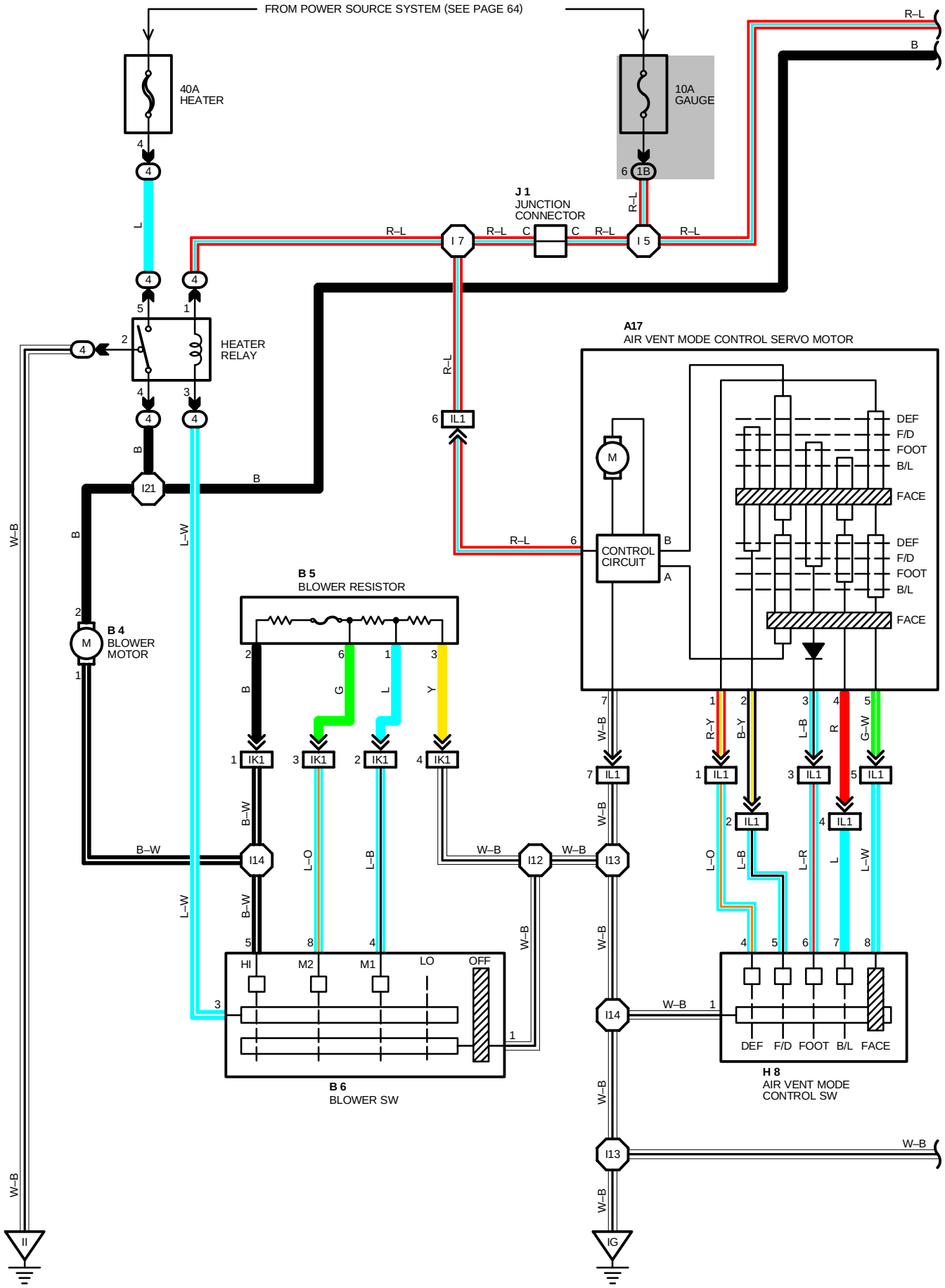

*1 : 1MZ–FE
*2 : 5S–FE

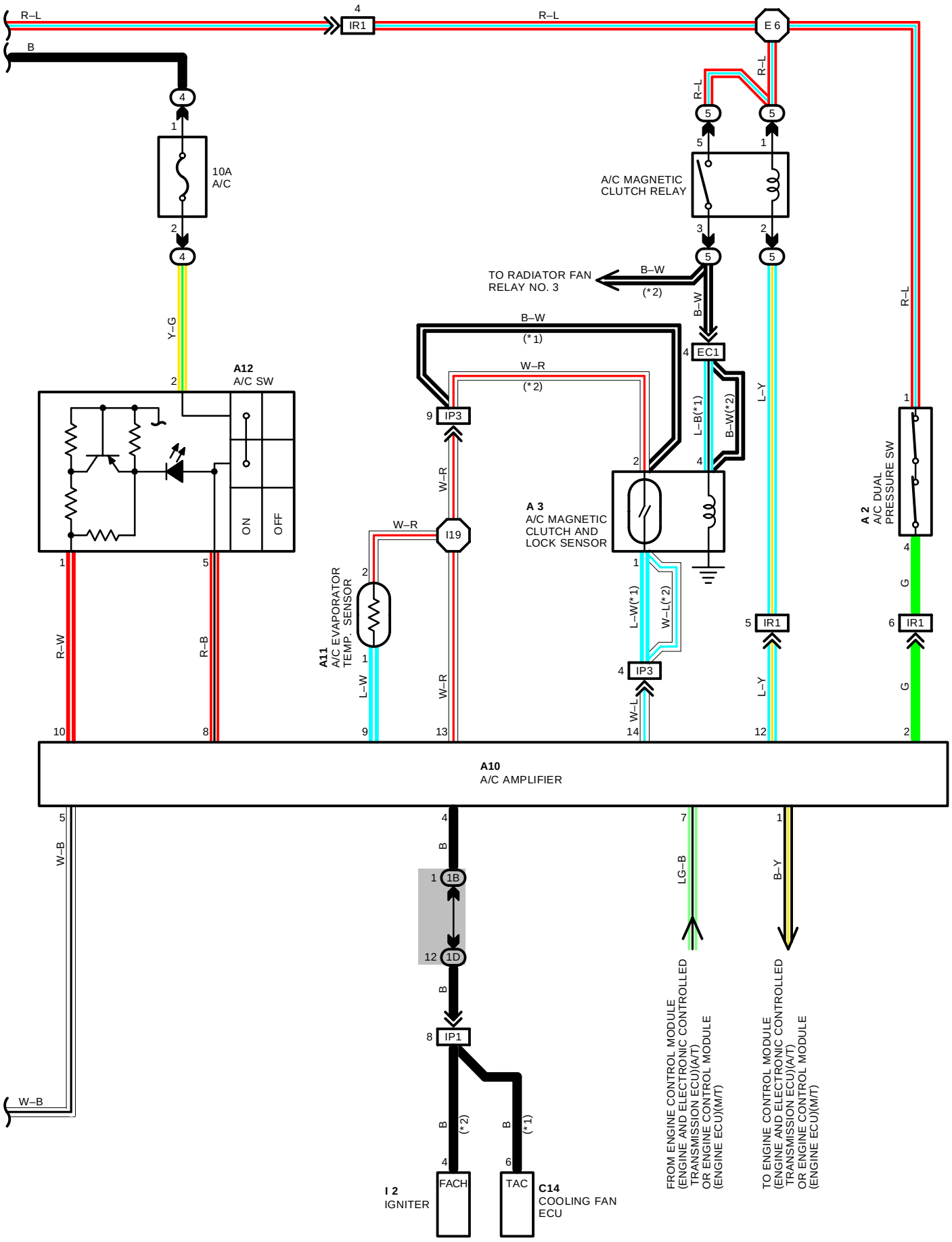

AIR CONDITIONING (LEVER CONTROL SW TYPE)

SYSTEM OUTLINE

CURRENT ALWAYS FLOWS FROM THE **HEATER** FUSE TO **TERMINAL 5** OF THE HEATER RELAY. WHEN THE IGNITION SW IS TURNED ON, CURRENT FLOWS FROM **GAUGE** FUSE TO **TERMINAL 2** OF THE AIR VENT MODE CONTROL SERVO MOTOR AND A/C MAGNETIC CLUTCH RELAY (COIL SIDE) → **TERMINAL 12** OF THE A/C AMPLIFIER, **TERMINAL 1** OF THE A/C DUAL PRESSURE SW → **TERMINAL 4** → **TERMINAL 2** OF THE A/C AMPLIFIER, HEATER RELAY (COIL SIDE) → **TERMINAL 3** OF THE BLOWER SW.

1. OPERATION OF AIR VENT MODE CONTROL SERVO MOTOR

WHEN THE DAMPER IS IN **FACE** POSITION AND THE BI–LEVEL OF THE AIR VENT MODE CONTROL SW IS THEN TURNED ON, CURRENT FLOWS FROM **TERMINAL 7** OF THE AIR VENT MODE CONTROL SW → **TERMINAL 5** OF THE AIR VENT MODE CONTROL SERVO MOTOR SO THAT A SIGNAL THAT THE GROUND CIRCUIT IS ACTIVATED IS INPUT TO **TERMINAL "B"** OF THE CONTROL CIRCUIT INSIDE THE AIR VENT MODE CONTROL SERVO MOTOR. SIMULTANEOUSLY, A SIGNAL THAT THE GROUND CIRCUIT IS NOT ACTIVATED IS INPUT TO **TERMINAL "A"** OF THE CONTROL CIRCUIT INSIDE THE SERVO MOTOR. THESE TWO SIGNALS ACTIVATE THE CONTROL CIRCUIT SO THAT CURRENT FROM THE **GAUGE** FUSE TO THE SERVO MOTOR, CAUSING THE SERVO MOTOR TO OPERATE AND THE DAMPER TO MOVE TO BI–LEVEL POSITION. WHEN THE DAMPER REACHES BI–LEVEL POSITION. A GROUND CUT SIGNAL IS INPUT TO **TERMINAL "B"** OF THE CONTROL CIRCUIT, THE CONTROL CIRCUIT OPERATES, THE SERVO MOTOR STOPS ROTATING AND THE DAMPER STOPS AT BI–LEVEL.

WHEN ANOTHER MODE POSITION IS SWITCHED TO, INPUT OF SIGNALS TO **TERMINAL "A"** AND **TERMINAL "B"** OF THE CONTROL CIRCUIT THAT GROUND IS NOT MADE (AS EXPLAINED ABOVE) ACTIVATES THE CONTROL CIRCUIT AND MOVES THE SERVO MOTOR TO THE DESIRED POSITION.

2. AIR CONDITIONING OPERATION

WHEN THE BLOWER SW IS ON, CURRENT FLOWS THE **GAUGE** FUSE → HEATER RELAY (COIL SIDE) → **TERMINAL 3** OF THE BLOWER SW → **TERMINAL 1** → **GROUND**, ACTIVATING THE HEATER RELAY. THIS CAUSES CURRENT TO FLOW FROM THE **HEATER** FUSE TO THE HEATER RELAY (POINT SIDE) → **A/C** FUSE → **TERMINAL 2** OF THE A/C SW. IF THE A/C SW IS THEN TURNED ON AT THIS TIME. A SIGNAL IS INPUT TO THE A/C AMPLIFIER. THIS ACTIVATES THE A/C AMPLIFER AND A/C MAGNETIC CLUTCH RELAY SO THAT CURRENT FLOWS FROM THE **GAUGE** FUSE TO THE A/C MAGNETIC CLUTCH RELAY (POINT SIDE) → A/C MAGNETIC CLUTCH. CAUSING THE COMPRESSOR TO OPERATE. THE VSV (FOR A/C IDLE–UP) IS TURNED ON SIMULTANEOUSLY TO PREVENT A DECREASE IN ENGINE SPEED DUE TO A/C OPERATION.

SERVICE HINTS

HEATER RELAY

(4)5– **(4)**4 : CLOSED WITH THE IGNITION SW ON AND BLOWER SW ON

A/C MAGNETIC CLUTCH RELAY

(5)5– **(5)**3 : CLOSED WITH THE IGNITION SW ON AND BLOWER SW ON AND A/C SW ON

A 2 A/C DUAL PRESSURE SW

1–4 : OPEN WITH PRESSURE **2.1** KG/CM (**30** PSI, **206** KPA) OR ABOVE **27** KG/CM (**384** PSI, **2646** KPA)

B 5 BLOWER RESISTOR

6–1 : APPROX. **3.17** Ω

6–3 : APPROX. **1.38** Ω

2–6 : APPROX. **0.38** Ω

: PARTS LOCATION

CODE	SEE PAGE	CODE	SEE PAGE	CODE	SEE PAGE
A 2	28 (1MZ–FE), 30 (5S–FE)	**A17**	32	**H 8**	33
A 3	28 (1MZ–FE), 30 (5S–FE)	**B 4**	32	**I 2**	30 (5S–FE)
A10	32	**B 5**	32	**J 1**	33
A11	32	**B 6**	32		
A12	32	**C14**	32		

: RELAY BLOCKS

CODE	SEE PAGE	RELAY BLOCKS (RELAY BLOCK LOCATION)
4	25	R/B NO. 4 (RIGHT KICK PANEL)
5	26	R/B NO. 5 (ENGINE COMPARTMENT LEFT)

: JUNCTION BLOCK AND WIRE HARNESS CONNECTOR

CODE	SEE PAGE	JUNCTION BLOCK AND WIRE HARNESS (CONNECTOR LOCATION)
1B	20	COWL WIRE AND J/B NO. 1 (INSTRUMENT PANEL LEFT)
1D		

: CONNECTOR JOINING WIRE HARNESS AND WIRE HARNESS

CODE	SEE PAGE	JOINING WIRE HARNESS AND WIRE HARNESS (CONNECTOR LOCATION)
EC1	38 (1MZ–FE)	ENGINE WIRE AND ENGINE ROOM MAIN WIRE
	40 (5S–FE)	
IK1	42	COWL WIRE AND A/C SUB WIRE
IL1	42	COWL WIRE AND SERVO MOTOR SUB WIRE
IP1	44	ENGINE WIRE AND COWL WIRE
IP3		
IR1	44	ENGINE ROOM MAIN WIRE AND COWL WIRE

: GROUND POINTS

CODE	SEE PAGE	GROUND POINTS LOCATION
IG	42	INSTRUMENT PANEL BRACE LH
II	42	RIGHT KICK PANEL

: SPLICE POINTS

CODE	SEE PAGE	WIRE HARNESS WITH SPLICE POINTS	CODE	SEE PAGE	WIRE HARNESS WITH SPLICE POINTS
E 6	38 (1MZ–FE)	ENGINE ROOM MAIN WIRE	**I13**	44	COWL WIRE
	40 (5S–FE)		**I14**		
I 5	44	COWL WIRE	**I19**		
I 7					

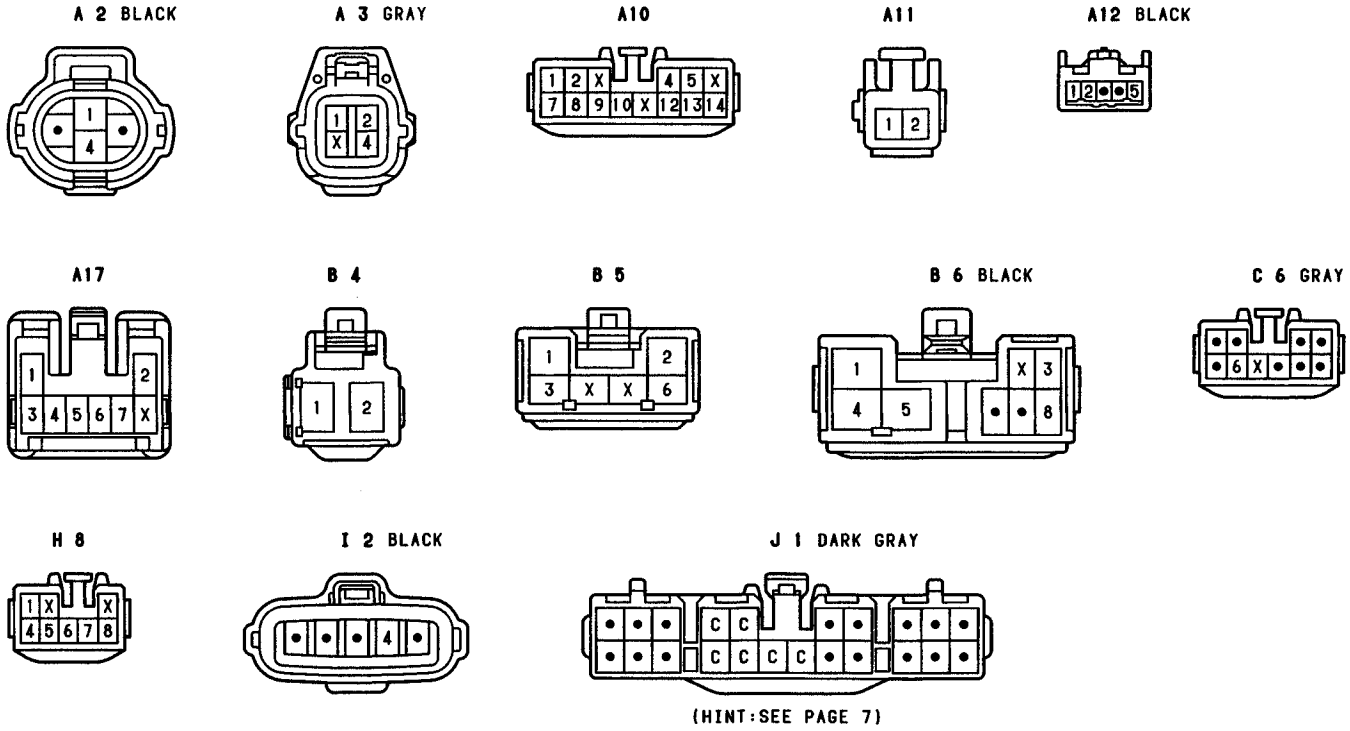

GROUND POINT

*1 : TMC MADE
*2 : TMM MADE
*3 : W/ POWER WINDOW
*4 : W/O POWER WINDOW
*5 : AIR CONDITIONING (PUSH CONTROL SW TYPE)
*6 : AIR CONDITIONING (LEVER CONTROL SW TYPE)

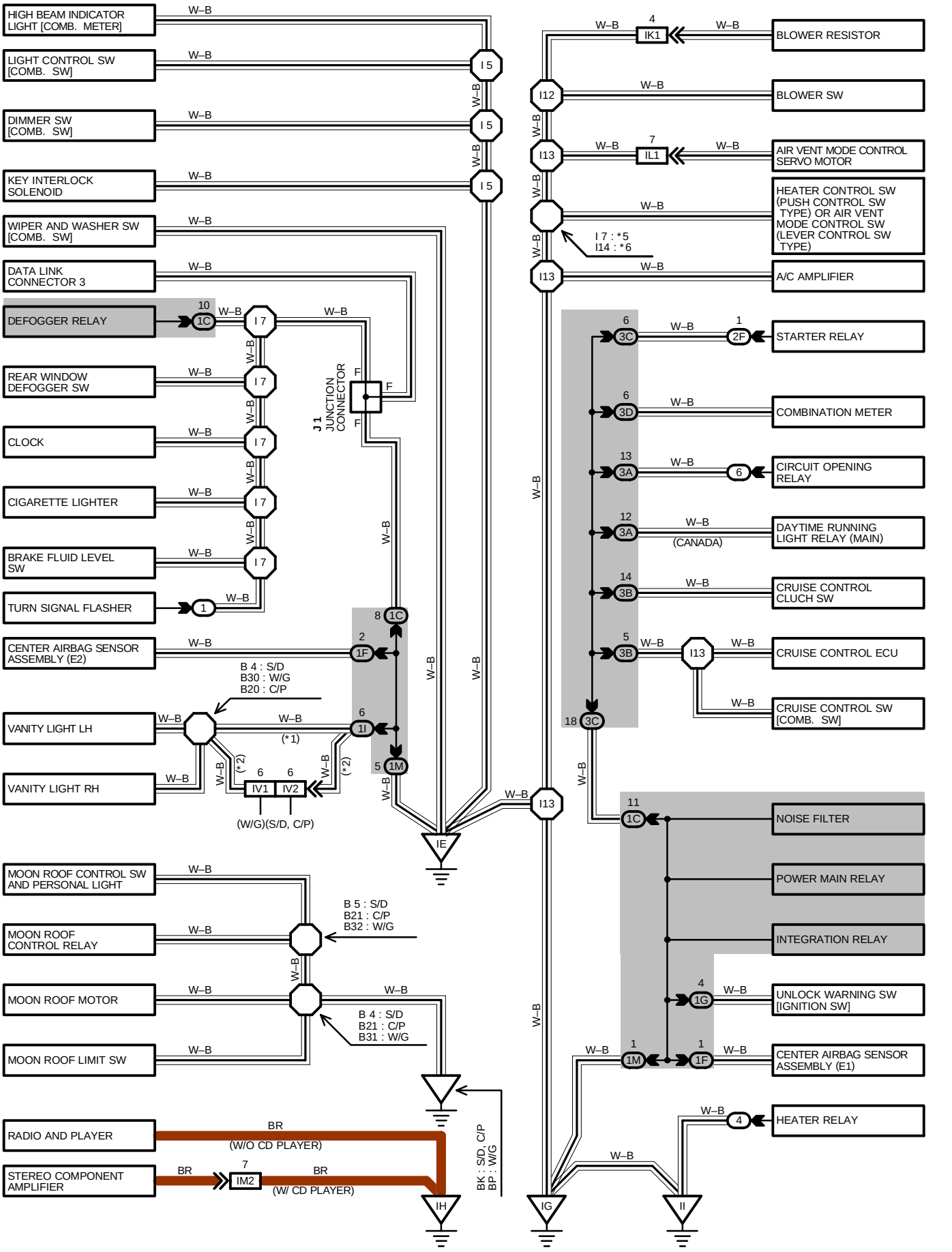

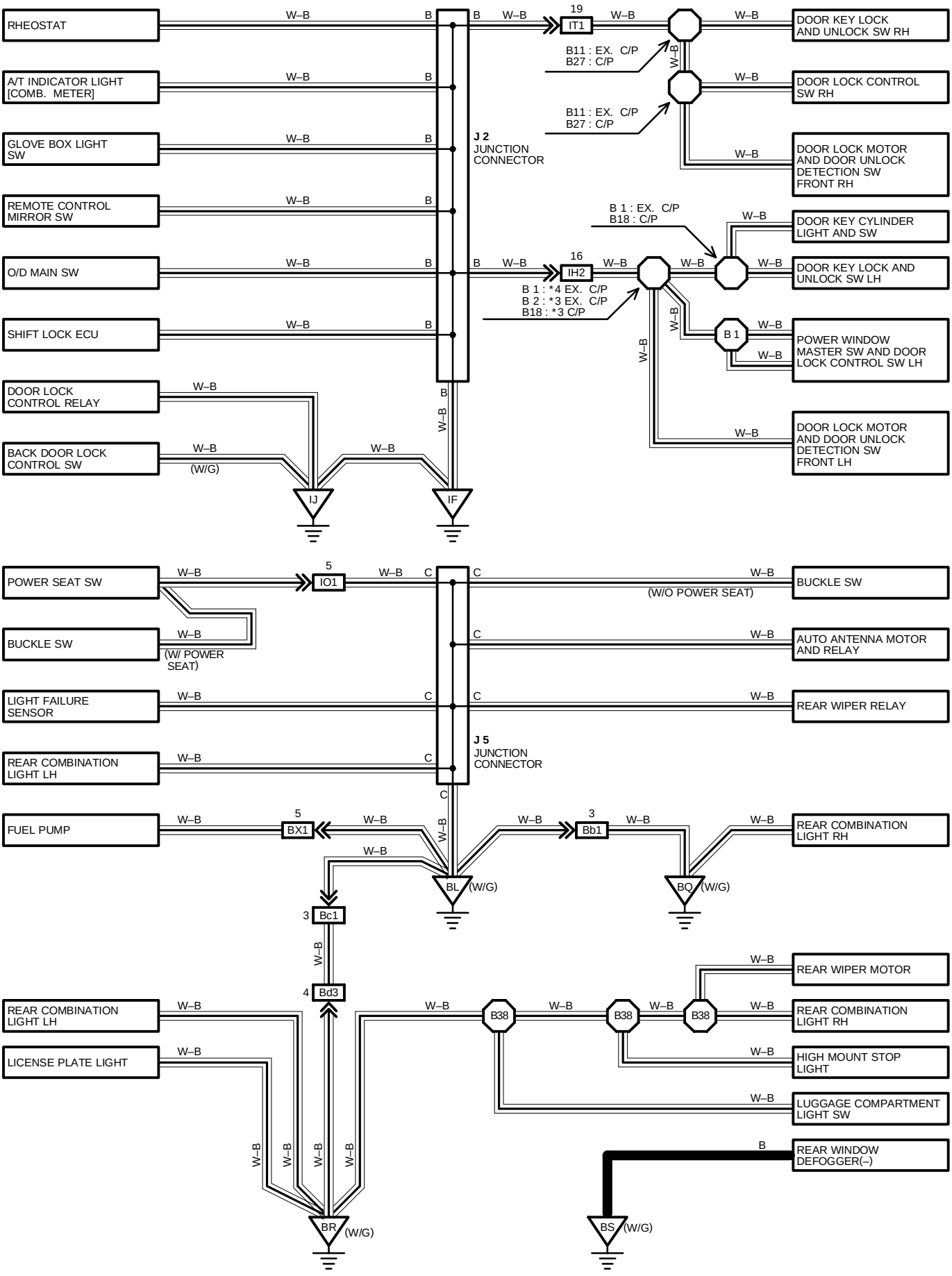
RHEOSTAT
A/T INDICATOR LIGHT [COMB. METER]
GLOVE BOX LIGHT SW
REMOTE CONTROL MIRROR SW
O/D MAIN SW
SHIFT LOCK ECU
DOOR LOCK CONTROL RELAY
BACK DOOR LOCK CONTROL SW
W–B
B
J 2 JUNCTION CONNECTOR
19
IT1
16
IH2
B11 : EX. C/P
B27 : C/P
B 1 : EX. C/P
B18 : C/P
B 1 : *4 EX. C/P
B 2 : *3 EX. C/P
B18 : *3 C/P
DOOR KEY LOCK AND UNLOCK SW RH
DOOR LOCK CONTROL SW RH
DOOR LOCK MOTOR AND DOOR UNLOCK DETECTION SW FRONT RH
DOOR KEY CYLINDER LIGHT AND SW
DOOR KEY LOCK AND UNLOCK SW LH
B 1
POWER WINDOW MASTER SW AND DOOR LOCK CONTROL SW LH
DOOR LOCK MOTOR AND DOOR UNLOCK DETECTION SW FRONT LH
(W/G)
IJ
IF
POWER SEAT SW
BUCKLE SW
(W/ POWER SEAT)
LIGHT FAILURE SENSOR
REAR COMBINATION LIGHT LH
FUEL PUMP
5
IO1
BX1
3
Bb1
Bc1
4
Bd3
C
J 5 JUNCTION CONNECTOR
(W/O POWER SEAT)
BUCKLE SW
AUTO ANTENNA MOTOR AND RELAY
REAR WIPER RELAY
REAR COMBINATION LIGHT RH
BL (W/G)
BQ (W/G)
REAR WIPER MOTOR
B38
REAR COMBINATION LIGHT RH
LICENSE PLATE LIGHT
HIGH MOUNT STOP LIGHT
LUGGAGE COMPARTMENT LIGHT SW
REAR WINDOW DEFOGGER(–)
BR (W/G)
BS (W/G)

GROUND POINT

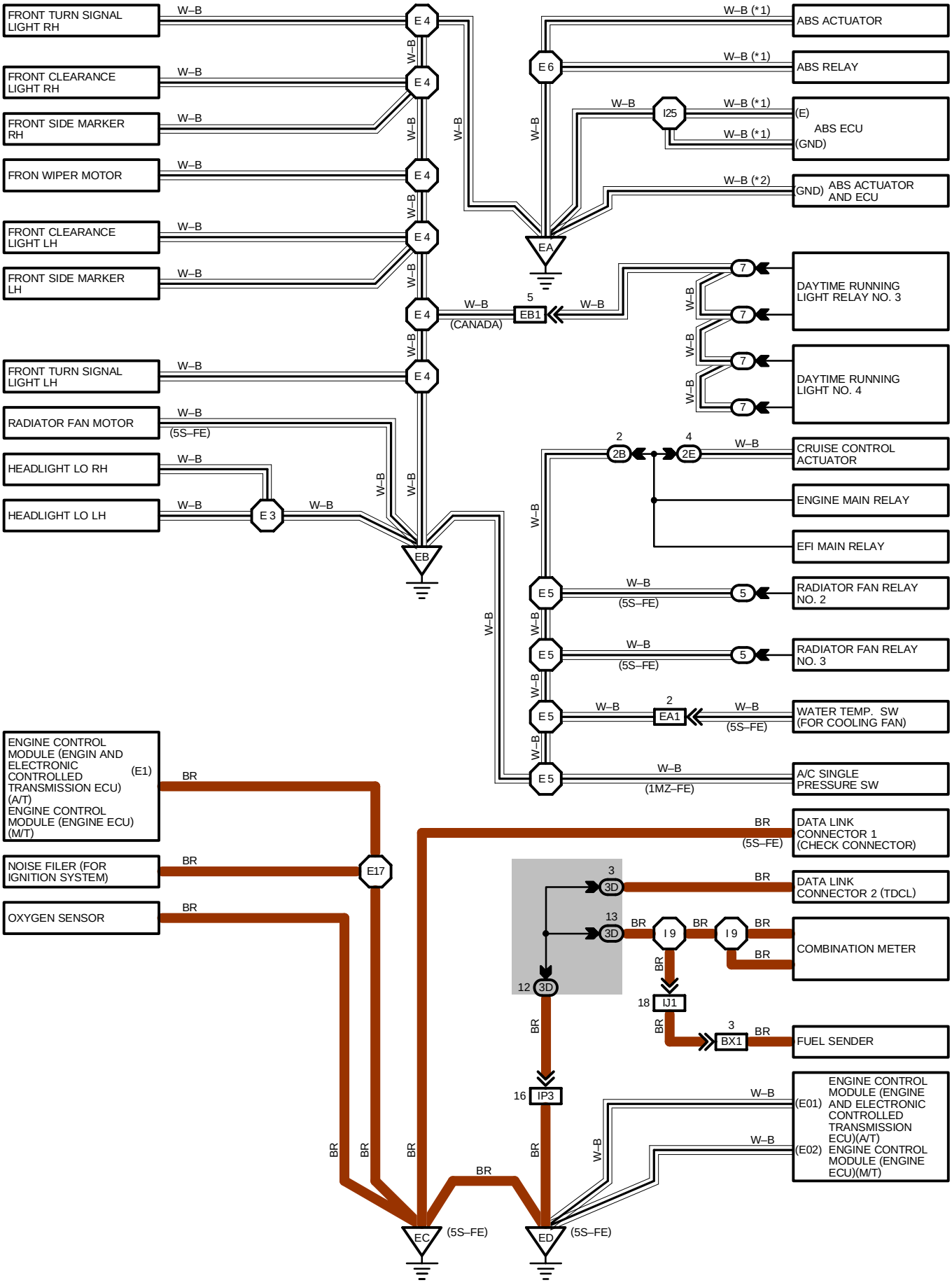

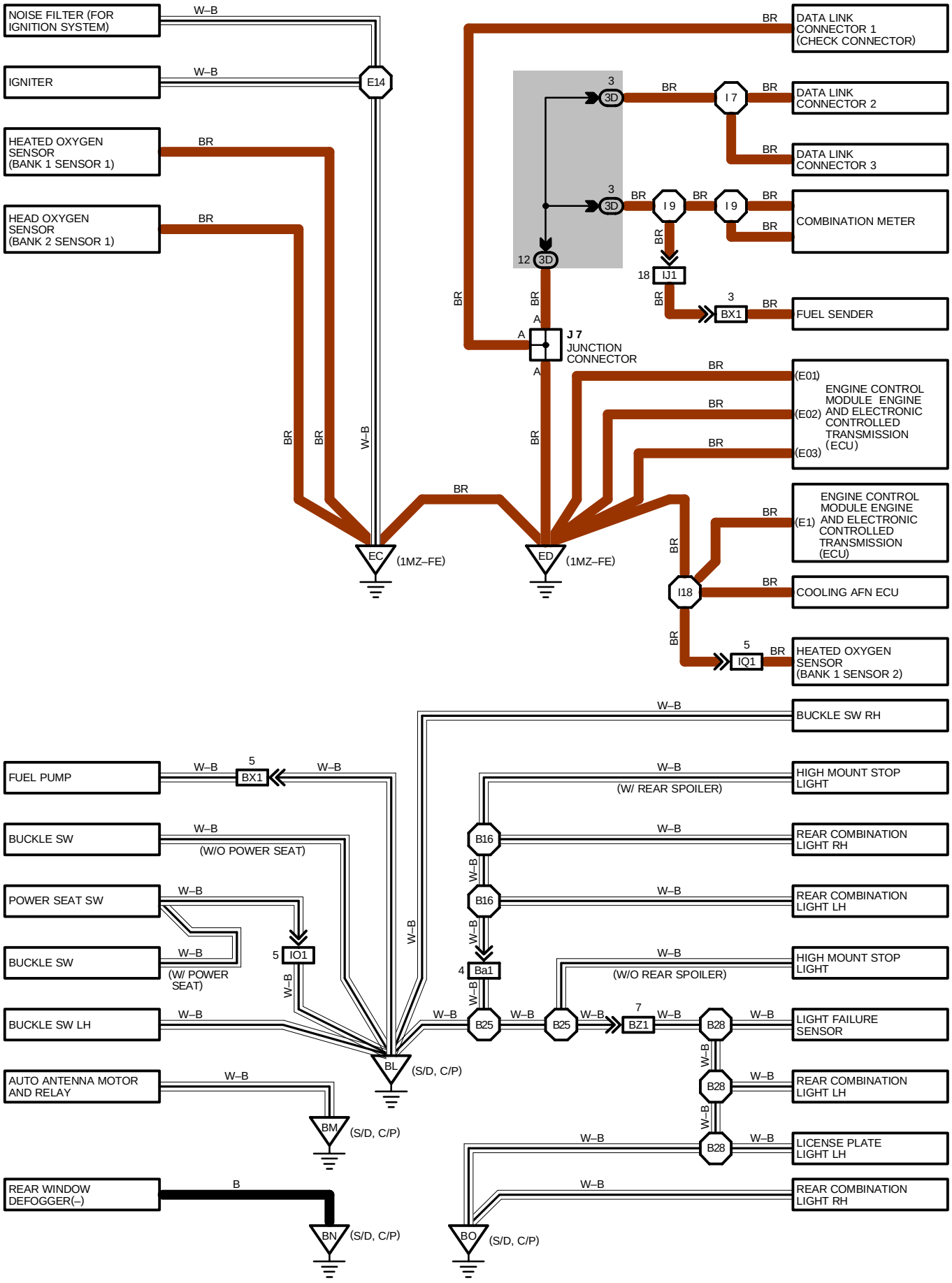
NOISE FILTER (FOR IGNITION SYSTEM)
IGNITER
HEATED OXYGEN SENSOR (BANK 1 SENSOR 1)
HEAD OXYGEN SENSOR (BANK 2 SENSOR 1)
W–B
BR
E14
DATA LINK CONNECTOR 1 (CHECK CONNECTOR)
DATA LINK CONNECTOR 2
DATA LINK CONNECTOR 3
COMBINATION METER
FUEL SENDER
3D
I7
I9
IJ1
BX1
J7 JUNCTION CONNECTOR
(E01)
(E02)
(E03)
ENGINE CONTROL MODULE ENGINE AND ELECTRONIC CONTROLLED TRANSMISSION (ECU)
(E1)
ENGINE CONTROL MODULE ENGINE AND ELECTRONIC CONTROLLED TRANSMISSION (ECU)
COOLING AFN ECU
HEATED OXYGEN SENSOR (BANK 1 SENSOR 2)
IQ1
EC
(1MZ–FE)
ED
(1MZ–FE)
BUCKLE SW RH
FUEL PUMP
BUCKLE SW
(W/O POWER SEAT)
POWER SEAT SW
BUCKLE SW
(W/ POWER SEAT)
BUCKLE SW LH
AUTO ANTENNA MOTOR AND RELAY
REAR WINDOW DEFOGGER(–)
IO1
Ba1
B16
B25
BZ1
B28
BL
(S/D, C/P)
BM
BN
BO
HIGH MOUNT STOP LIGHT
(W/ REAR SPOILER)
REAR COMBINATION LIGHT RH
REAR COMBINATION LIGHT LH
HIGH MOUNT STOP LIGHT
(W/O REAR SPOILER)
LIGHT FAILURE SENSOR
REAR COMBINATION LIGHT LH
LICENSE PLATE LIGHT LH
REAR COMBINATION LIGHT RH

GROUND POINT

*1 : TMC MADE
*2 : TMM MADE

: PARTS LOCATION

CODE	SEE PAGE	CODE	SEE PAGE	CODE	SEE PAGE
J 1	33	**J 5**	36 (W/G)		
J 2	33	**J 7**	33		

: RELAY BLOCKS

CODE	SEE PAGE	RELAY BLOCKS (RELAY BLOCK LOCATION)
1	25	R/B NO. 1 (LEFT KICK PANEL)
4	25	R/B NO. 4 (RIGHT KICK PANEL)
5	26	R/B NO. 5 (ENGINE COMPARTMENT LEFT)
6	26	R/B NO. 6 (BEHIND GLOVE BOX)
7	27	R/B NO. 7 (NEAR THE BATTERY)

: JUNCTION BLOCK AND WIRE HARNESS CONNECTOR

CODE	SEE PAGE	JUNCTION BLOCK AND WIRE HARNESS (CONNECTOR LOCATION)
1C	20	COWL WIRE AND J/B NO. 1 (INSTRUMENT PANEL LEFT)
1F		
1G		
1I	20 (*1)	ROOF WIRE AND J/B NO. 1 (INSTRUMENT PANEL) TMC MADE
	20 (*2)	COWL WIRE AND J/B NO. 1 (INSTRUMENT PANEL) TMM MADE
1M	20	COWL WIRE AND J/B NO. 1 (INSTRUMENT PANEL LEFT)
2B	22	ENGINE ROOM MAIN WIRE AND J/B NO. 2 (ENGINE COMPARTMENT LEFT)
2E		
2F	22	COWL WIRE AND J/B NO. 2 (ENGINE COMPARTMENT LEFT)
3A	24	COWL WIRE AND J/B NO. 3 (BEHIND COMBINATION METER)
3B		
3C		
3D		

: CONNECTOR JOINING WIRE HARNESS AND WIRE HARNESS

CODE	SEE PAGE	JOINING WIRE HARNESS AND WIRE HARNESS (CONNECTOR LOCATION)
EA1	38 (1MZ–FE)	ENGINE ROOM MAIN WIRE AND ENGINE ROOM NO. 3 WIRE
EB1	38 (1MZ–FE)	ENGINE ROOM MAIN WIRE AND RELAY WIRE
	40 (5S–FE)	
IH2	42	FRONT DOOR LH WIRE AND INSTRUMENT PANEL WIRE
IJ1	42	FLOOR NO. 1 WIRE AND COWL WIRE
IK1	42	COWL WIRE AND A/C SUB WIRE
IL1	42	COWL WIRE AND SERVO MOTOR SUB WIRE
IM2	42	INSTRUMENT PANEL WIRE AND CONSOLE BOX WIRE
IO1	42	FLOOR NO. 1 WIRE AND SEAT WIRE
IP3	44	ENGINE WIRE AND COWL WIRE
IQ1	44	ENGINE WIRE AND INSTRUMENT PANEL WIRE
IT1	44	FRONT DOOR RH WIRE AND INSTRUMENT PANEL WIRE
IV1	44	ROOF WIRE AND COWL WIRE
IV2	44	ROOF WIRE AND COWL WIRE MADE IN USA
BX1	46 (S/D)	FUEL GAUGE WIRE AND FLOOR NO. 1 WIRE
	48 (C/P)	
	50 (W/G)	
BZ1	46 (S/D)	LUGGAGE ROOM NO. 1 WIRE AND FLOOR NO. 1 WIRE
	48 (C/P)	
Ba1	46 (S/D)	FLOOR NO. 1 WIRE AND LUGGAGE ROOM NO. 2 WIRE
	48 (C/P)	
Bb1	50 (W/G)	LUGGAGE ROOM NO. 1 WIRE AND FLOOR NO. 1 WIRE
Bc1	50 (W/G)	BACK DOOR NO. 1 WIRE AND FLOOR NO. 1 WIRE
Bd3	50 (W/G)	BACK DOOR NO. 1 WIRE AND BACK DOOR NO. 2 WIRE

: GROUND POINTS

CODE	SEE PAGE	GROUND POINTS LOCATION
EA	38 (1MZ–FE)	FRONT RIGHT FENDER
	40 (5S–FE)	
EB	38 (1MZ–FE)	FRONT LEFT FENDER
	40 (5S–FE)	
EC	38 (1MZ–FE)	INTAKE MANIFOLD RH
	40 (5S–FE)	
ED	38 (1MZ–FE)	INTAKE MANIFOLD LH
	40 (5S–FE)	
IE	42	LEFT KICK PANEL
IF		
IG	42	INSTRUMENT PANEL BRACE LH
IH	42	INSTRUMENT PANEL BRACE RH
II	42	RIGHT KICK PANEL
IJ		
BK	46 (S/D)	ROOF LEFT
	48 (C/P)	
BL	46 (S/D)	UNDER THE LEFT QUARTER PILLAR
	48 (C/P)	
	50 (W/G)	
BM	46 (S/D)	
	48 (C/P)	
BN	46 (S/D)	UNDER THE RIGHT QUARTER PILLAR
	48 (C/P)	
BO	46 (S/D)	LEFT QUARTER PILLAR
	48 (C/P)	
BP	50 (W/G)	BACK PANEL CENTER
BQ	50 (W/G)	LOWER BACK PANEL CENTER
BR	50 (W/G)	BACK DOOR CENTER
BS	50 (W/G)	BACK DOOR RIGHT

: SPLICE POINTS

CODE	SEE PAGE	WIRE HARNESS WITH SPLICE POINTS	CODE	SEE PAGE	WIRE HARNESS WITH SPLICE POINTS
E 3	38 (1MZ–FE)	ENGINE ROOM MAIN WIRE	**B 2**	46 (S/D)	FRONT DOOR LH WIRE
	40 (5S–FE)			50 (W/G)	
E 4	38 (1MZ–FE)		**B 4**	46 (S/D)	ROOF WIRE
	40 (5S–FE)		**B 5**		
E 5	38 (1MZ–FE)		**B11**	46 (S/D)	FRONT DOOR RH WIRE
	40 (5S–FE)			50 (W/G)	
E 6	38 (1MZ–FE)		**B16**	46 (S/D)	LUGGAGE ROOM NO. 2 WIRE
	40 (5S–FE)		**B18**	48 (C/P)	FRONT DOOR LH WIRE
E14	38 (1MZ–FE)	ENGINE WIRE	**B21**	48 (C/P)	ROOF WIRE
E17	40 (5S–FE)		**B25**	48 (C/P)	FLOOR NO. 1 WIRE
I 5	44	COWL WIRE	**B26**		
I 7			**B27**	48 (C/P)	FRONT DOOR RH WIRE
I 9			**B28**	48 (C/P)	LUGGAGE ROOM NO. 1 WIRE
I13			**B30**	50 (W/G)	ROOF WIRE
I14			**B31**		
I18	44	ENGINE WIRE	**B32**		
B 1	46 (S/D)	FRONT DOOR LH WIRE	**B38**	50 (W/G)	BACK DOOR NO. 2 WIRE
	50 (W/G)				

J 1 DARK GRAY

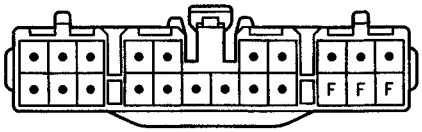

(HINT:SEE PAGE 7)

J 2

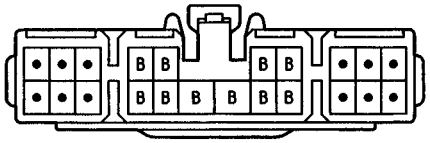

(HINT:SEE PAGE 7)

J 5

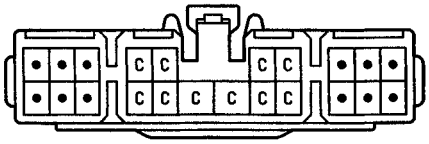

(HINT:SEE PAGE 7)

J 7 BLUE



(HINT:SEE PAGE 7)

HOW TO USE THIS MANUAL

* The system shown here is an EXAMPLE ONLY. It is different to the actual circuit shown in the wiring diagram section.

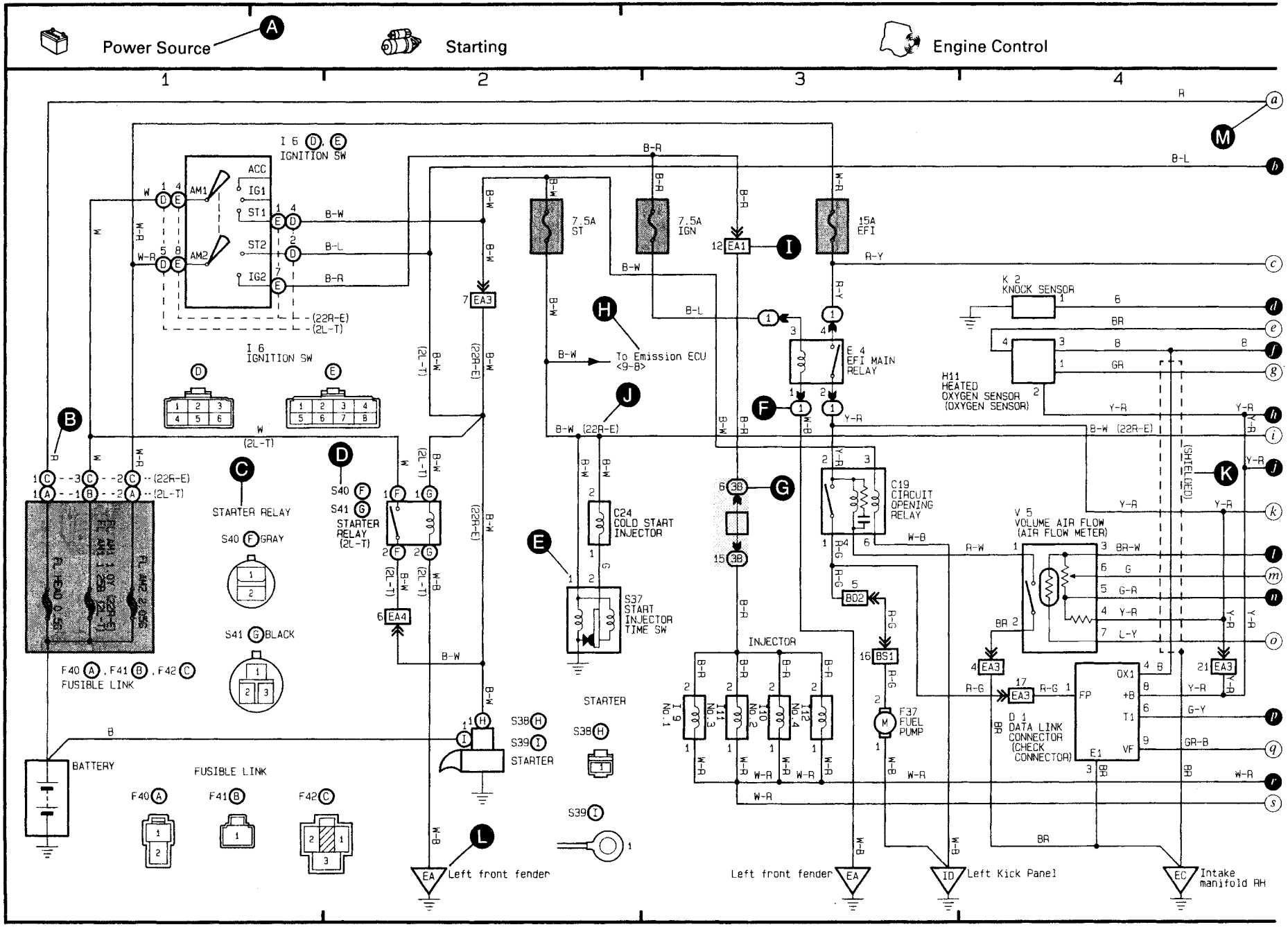

Ⓐ: System Title

Ⓑ: Indicates the wiring color.

Wire colors are indicated by an alphabetical code.

B	= Black	L	= Blue	R	= Red
BR	= Brown	LG	= Light Green	V	= Violet
G	= Green	O	= Orange	W	= White
GR	= Gray	P	= Pink	Y	= Yellow

The first letter indicates the basic wire color and the second letter indicates the color of the stripe.

Example: L – Y

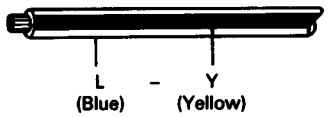

Ⓒ: Indicates the connector to be connected to a part (the numeral indicates the pin No.)

Ⓓ: The position of the parts is the same as shown in the wiring diagram and wire routing.

Ⓔ: Indicates the pin number of the connector. The numbering system is different for female and male connectors.

Example: **Numbered in order from upper left to lower right** **Numbered in order from upper right to lower left**

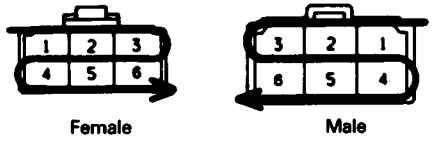

The numbering system for the overall wiring diagram is the same as above.

Ⓕ: Indicates a Relay Block. No Shading is used and only the Relay Block No. is shown to distinguish it from the J/B.

Example: ① Indicates Relay Block No. 1.

Ⓖ: Junction Block (The number in the circle is the J/B No. and connector code is shown beside it). Junction Blocks are shaded to clearly separate them from other parts (different junction blocks are shaded differently for further clarification.).

Example:

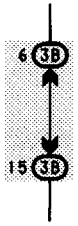

3B indicates that it is inside Junction Block No. 3.

Ⓗ: Indicates related system.

Ⓘ: Indicates the wiring harness and wiring harness connector. The wiring harness with male terminal is shown with arrows **(≫)**.

Outside numerals are pin numbers.

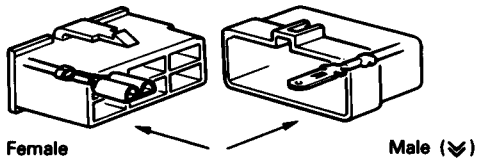

Ⓙ: ( ) is used to indicate different wiring and connector, etc. when the vehicle model, engine type, or specification is different.

Ⓚ: Indicates a shielded cable.



Ⓛ: Indicates and located on ground point.

Ⓜ: The same code occuring on the next page indicates that the wire harness is continuous.

SYSTEM INDEX

1994 Model (Location No. 1 to 36)

SYSTEMS	LOCATION
ABS (Anti–Lock Brake System)	25–2 (TMC Made) 26–2 (TMM Made)
Air Conditioning	35–1(Lever Con–trol SW Type) 36–1(Push Con–trol SW Type)
Auto Antenna	27–3 (W/G) 28–3 (S/D,C/P)
Back–Up Light	6–7 (1MZ–FE) 7–7 (5S–FE)
Back Door Lock (w/o Power Window)	22–4 (W/G)
Charging	2–4
Cigarette Lighter and Clock	22–3
Combination Meter	33–1
Cruise Control	24–2
Door Lock	19–1
Electrical Controlled Transmission and A/T Indicator	6–2 (1MZ–FE) 7–2 (5S–FE)
Electrically Controlled Hydraulic Cooling Fan	27–2 (1MZ–FE)
Electric Tension Reducer	36–7
Engine Control	3–1 (1MZ–FE) 4–1 (5S–FE A/T and California M/T) 5–1 (5S–FE Ex. A/T and California M/T)
Front Wiper and Washer	18–2
Headlight	8–3 (for USA) 10–1 (for Canada)
Horn	18–4
Illumination	15–2
Interior Light	11–1 (S/D, C/P w/ Key Illuminated Entry) 12–1 (W/G w/ Key Illuminated Entry) 13–1 (S/D, C/P w/o Key Illuminated Entry) 14–1 (W/G w/o Key Illuminated Entry)
Light Auto Turn Off	34–2
Moon Roof	21–1
Power Seat	21–3
Power Source	1~36–1
Power Window	20–2
Radiator Fan and Condenser Fan	34–3 (5S–FE)
Radio and Player	29–1(S/D, C/P 6 Speaker) 30–1(W/G 8 Speaker) 31–1(S/D, C/P 4 Speaker) 32–2(W/G 6 Speaker)
Rear Window Defogger	24–4 (W/G) 28–1 (S/D,C/P)
Rear Wiper and Washer	22–2
Remote Control Mirror	20–1
Shift Lock	23–2
SRS (Supplemental Restraint System)	23–3
Starting and Ignition	1–2 (1MZ–FE) 2–2 (5S–FE)
Stop Light	8–1 (W/G) 9–1 (S/D, C/P)
Taillight	16–1 (S/D, C/P) 17–1 (W/G)
Turn Signal and Hazard Warning Light	9–3 (S/D, C/P) 18–2 (W/G)
Unlock and Seat Belt Warning	34–1

1 CAMRY ELECTRICAL WIRING DIAGRAM

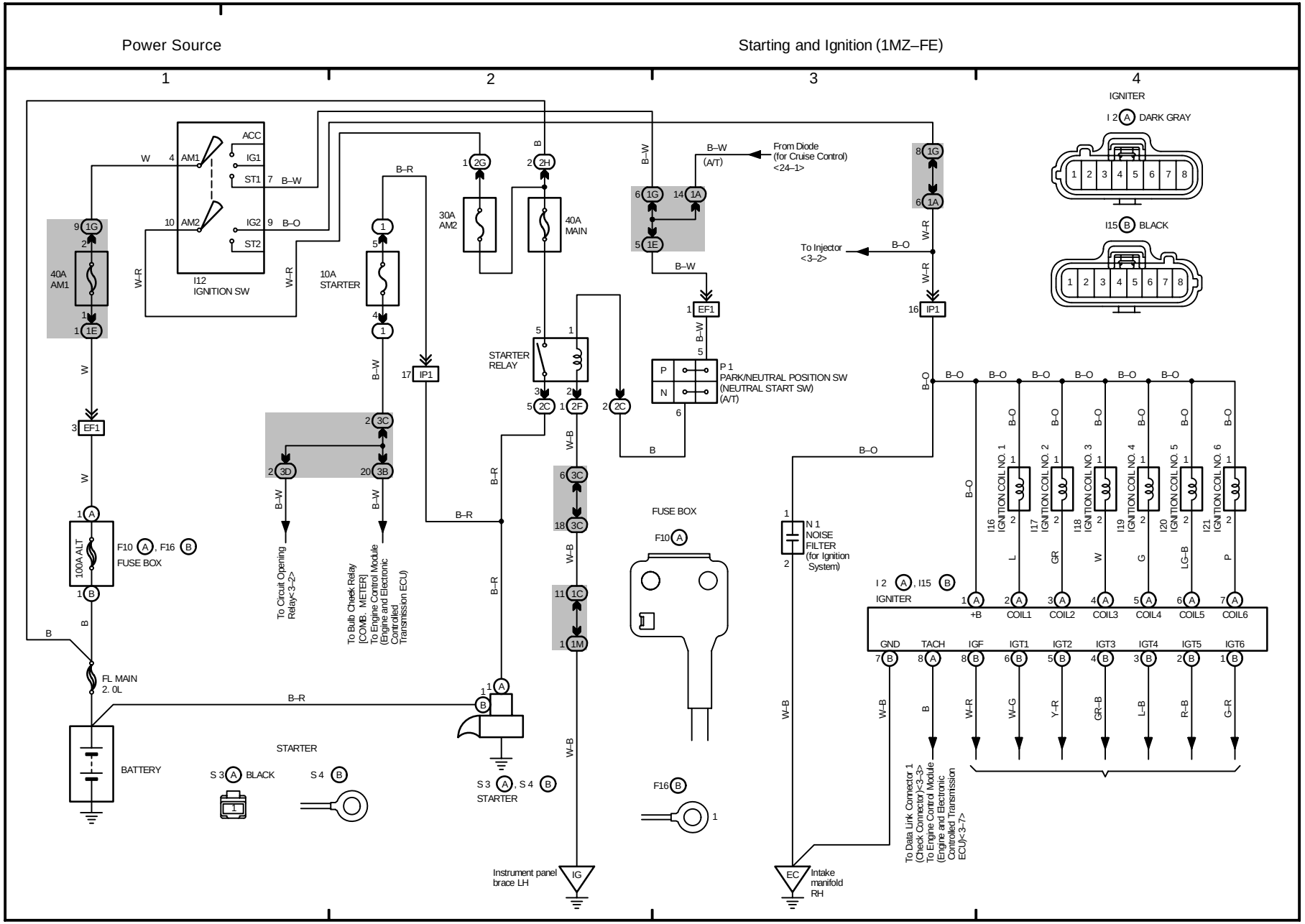

2 CAMRY

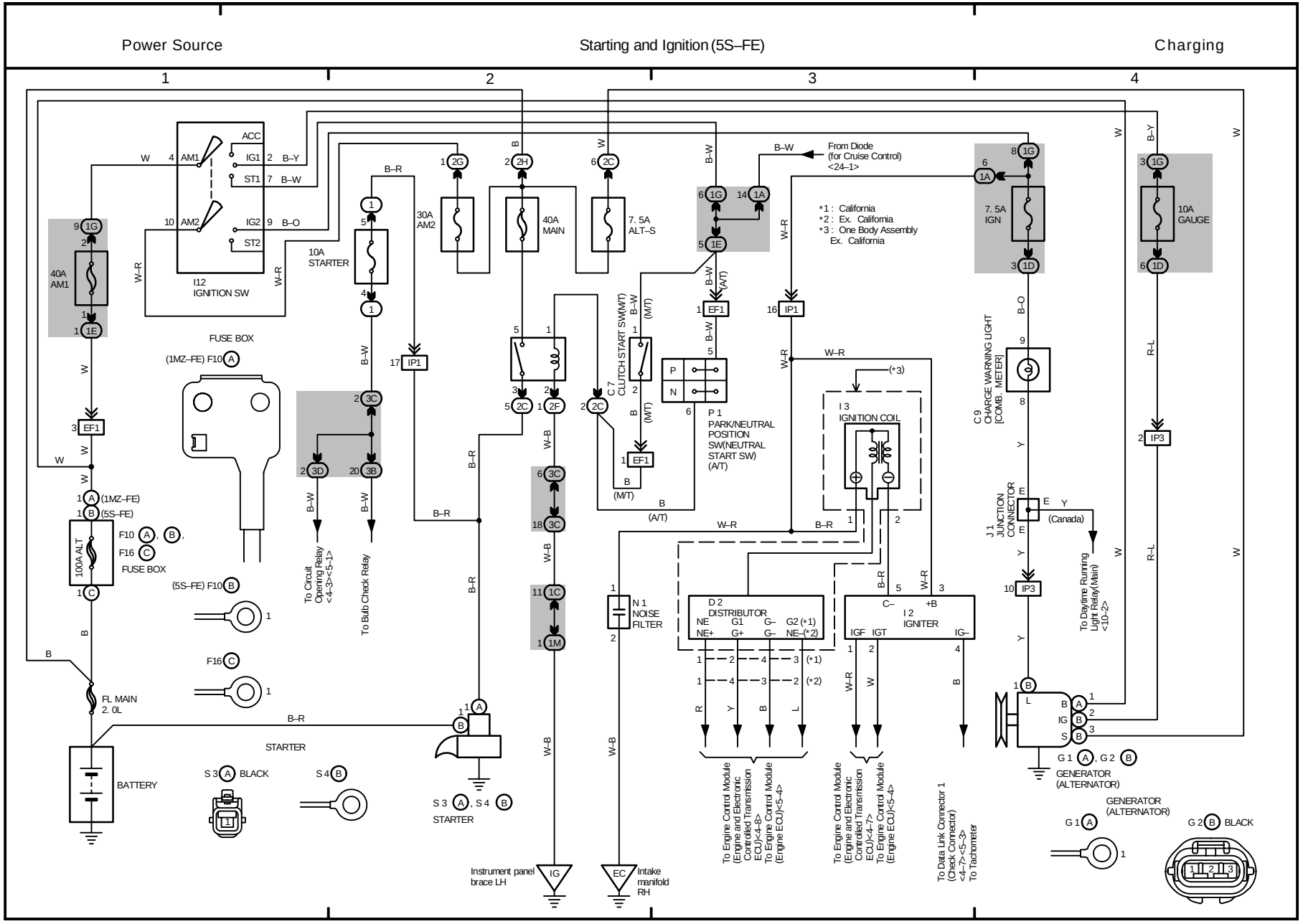
Power Source
Starting and Ignition (5S–FE)
Charging
1
2
3
4
ACC
IG1
ST1
IG2
ST2
AM1
AM2
I12
IGNITION SW
40A
AM1
30A
AM2
40A
MAIN
7. 5A
ALT–S
10A
STARTER
7. 5A
IGN
10A
GAUGE
From Diode
(for Cruise Control)
<24–1>
*1 : California
*2 : Ex. California
*3 : One Body Assembly
Ex. California
FUSE BOX
(1MZ–FE) F10
(5S–FE) F10
F10 , ,
F16
FUSE BOX
100A ALT
FL MAIN
2. 0L
BATTERY
STARTER
S3 BLACK
S4
S3 , S4
STARTER
To Circuit
Opening Relay
<4–3><5–1>
To Bulb Check Relay
C7
CLUTCH START SW(M/T)
P 1
PARK/NEUTRAL
POSITION
SW(NEUTRAL
START SW)
(A/T)
I 3
IGNITION COIL
C9
CHARGE WARNING LIGHT
[COMB METER]
J1
JUNCTION
CONNECTOR
(Canada)
To Daytime Running
Light Relay(Main)
<10–2>
N 1
NOISE
FILTER
D 2
DISTRIBUTOR
NE
NE+
G1
G+
G–
G–
G2 (*1)
NE–(*2)
I 2
IGNITER
C–
+B
IGF
IGT
IG–
To Engine Control Module
(Engine and Electronic
Controlled Transmission
ECU)<4–8>
To Engine Control Module
(Engine ECU)<5–4>
To Engine Control Module
(Engine and Electronic
Controlled Transmission
ECU)<4–7>
To Engine Control Module
(Engine ECU)<5–4>
To Data Link Connector 1
(Check Connector)
<4–7><5–3>
To Tachometer
GENERATOR
(ALTERNATOR)
G1 , G2
GENERATOR
(ALTERNATOR)
G1
G2 BLACK
Instrument panel
brace LH
IG
EC
Intake
manifold
RH

(Cont. next page)

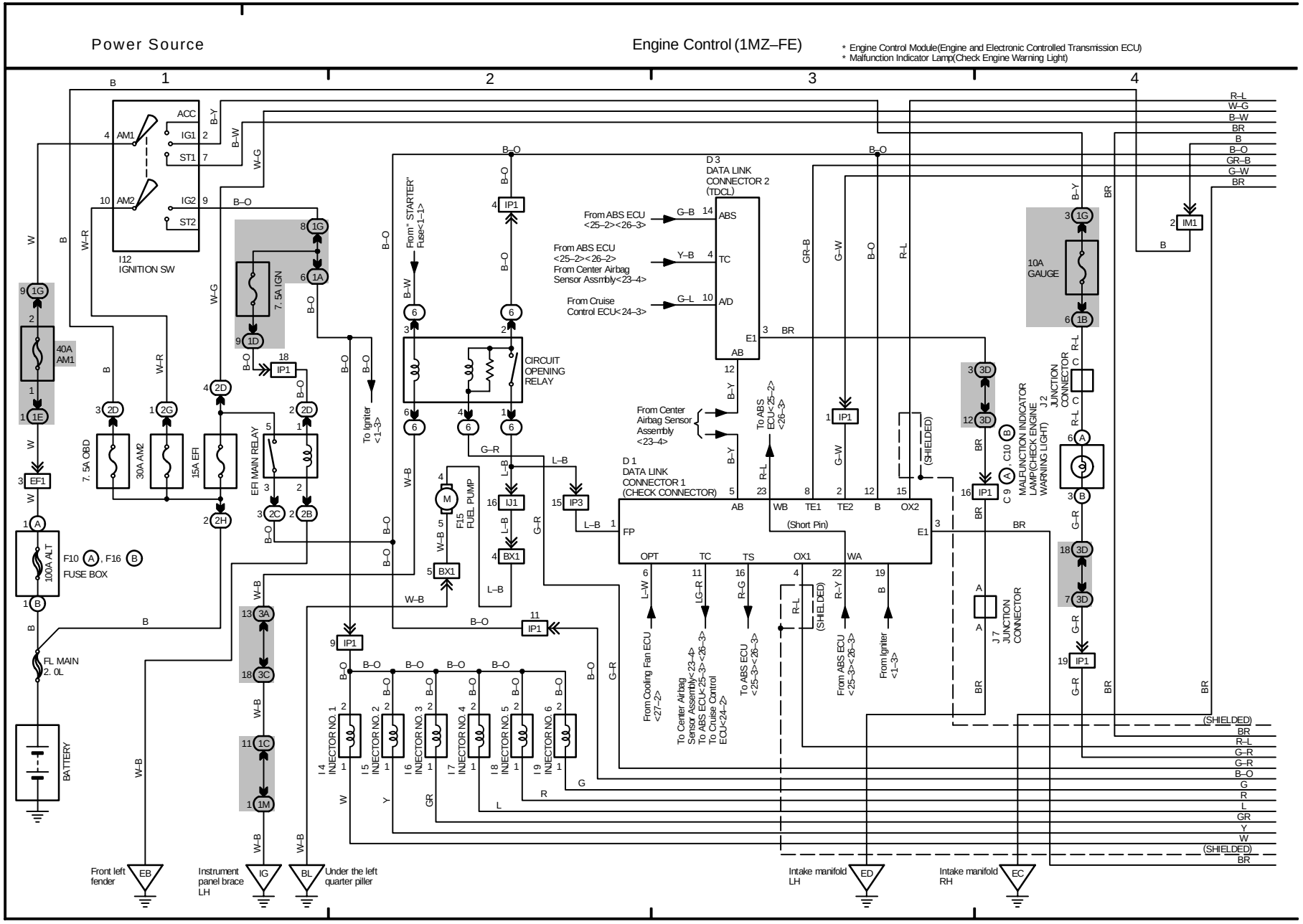

3 CAMRY (Cont' d)

(Cont. next page)

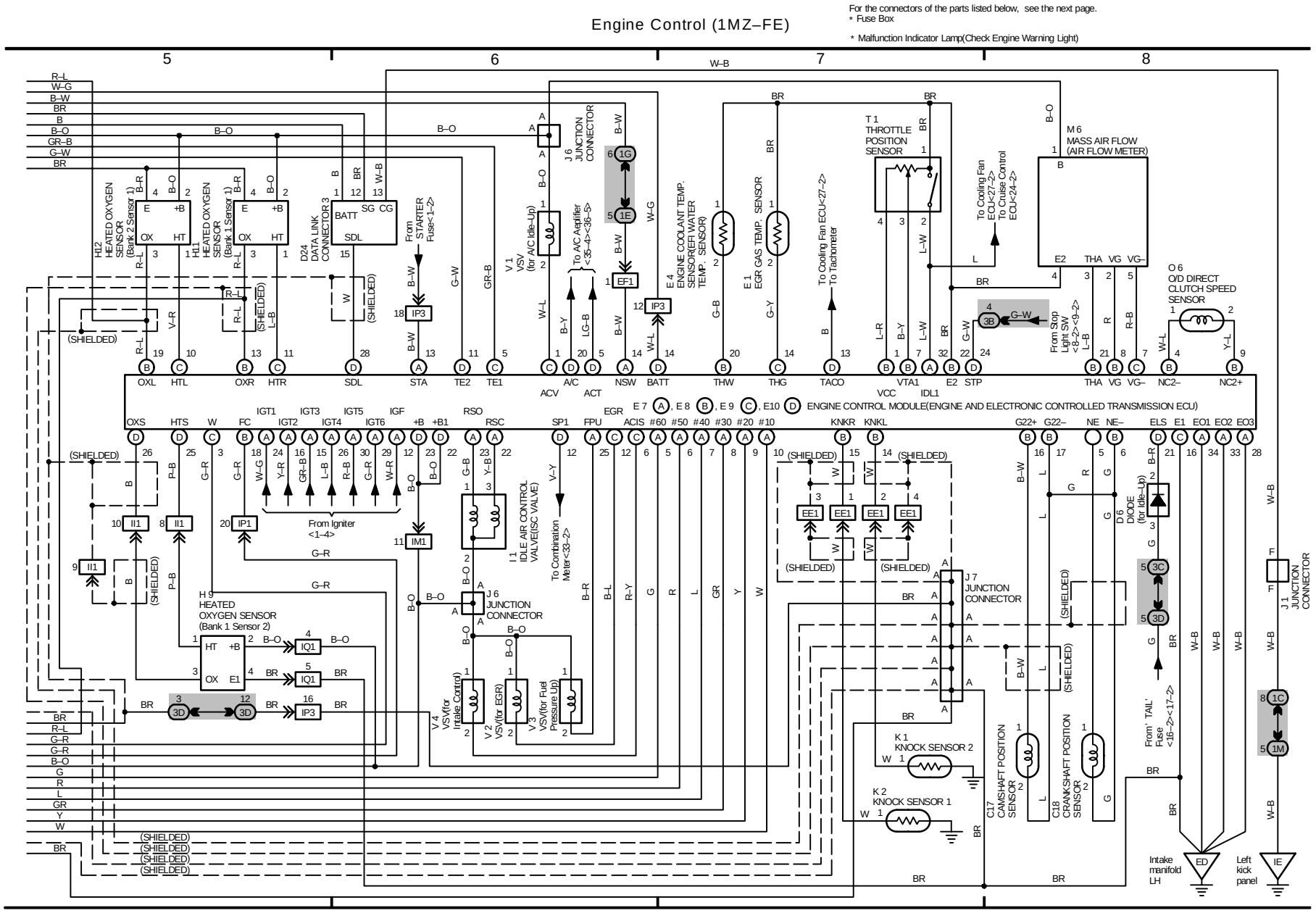

Engine Control (1MZ–FE)

9 10 11 12

FUSE BOX

F10 (A)

F16 (B)

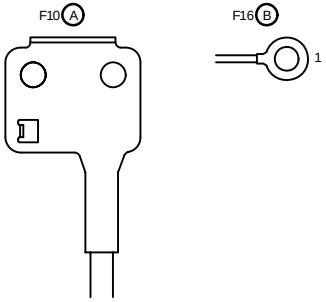

ENGINE CONTROL MODULE
(ENGINE AND ELECTRONIC CONTROLLED TRANSMISSION ECU)

E 7 (A) DARK GRAY

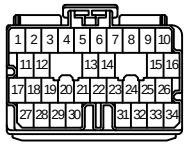

E 8 (B) DARK GRAY



E 9 (C) DARK GRAY

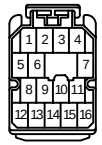

E10 (D) DARK GRAY

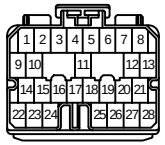

MALFUNCTION INDICATOR LAMP
(CHECK ENGINE WARNING LIGHT)
[COMB. METER]

C 9 (A)

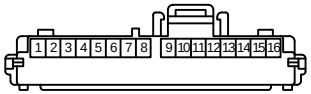

C10 (B) GRAY

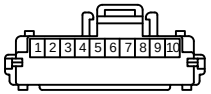

(Cont. next page)

Power Source

Engine Control (5S–FE A/T and California M/T)

*1 : California
*2 : Ex. California

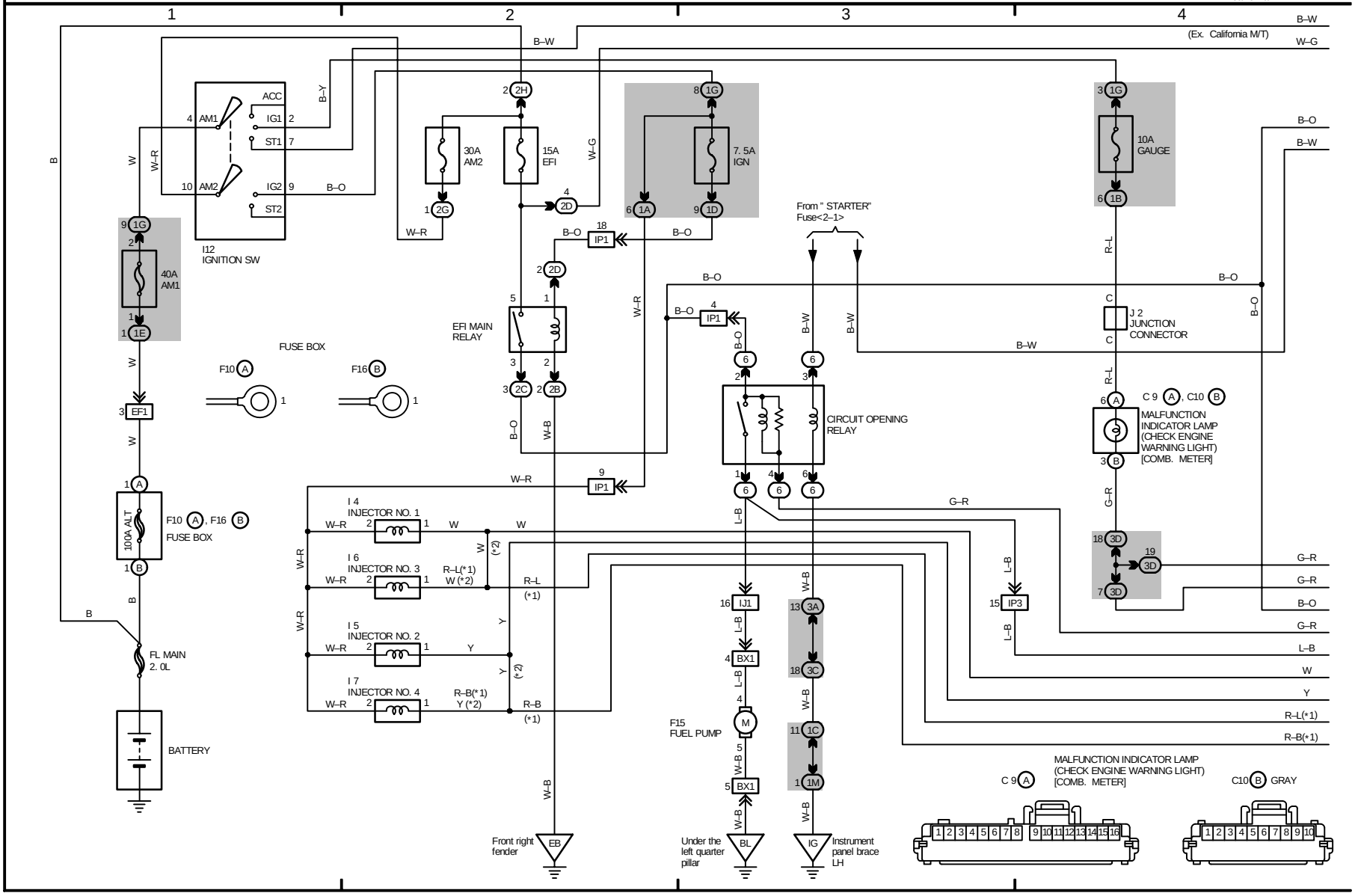

4 CAMRY (Cont' d)

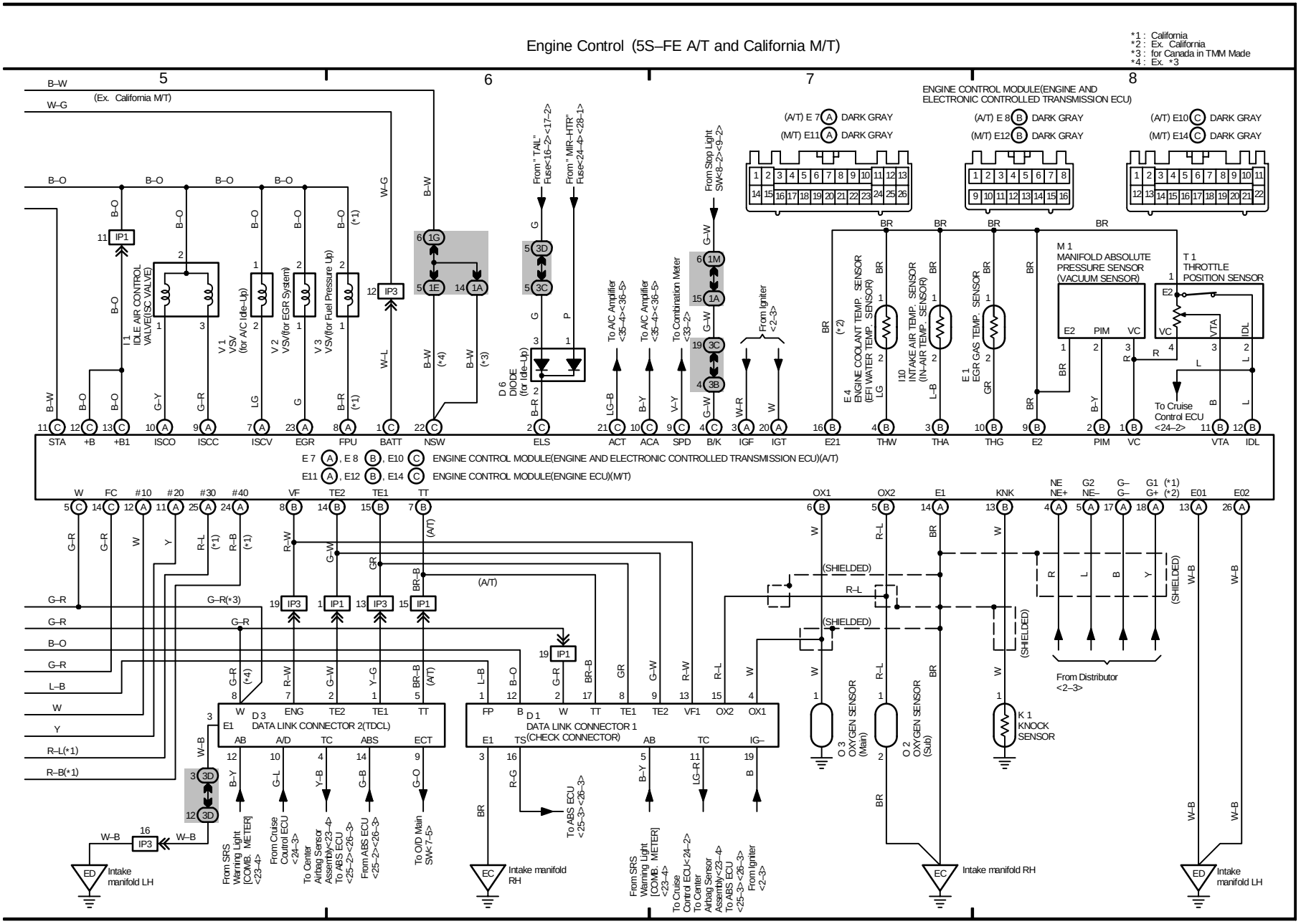

(Cont. next page)

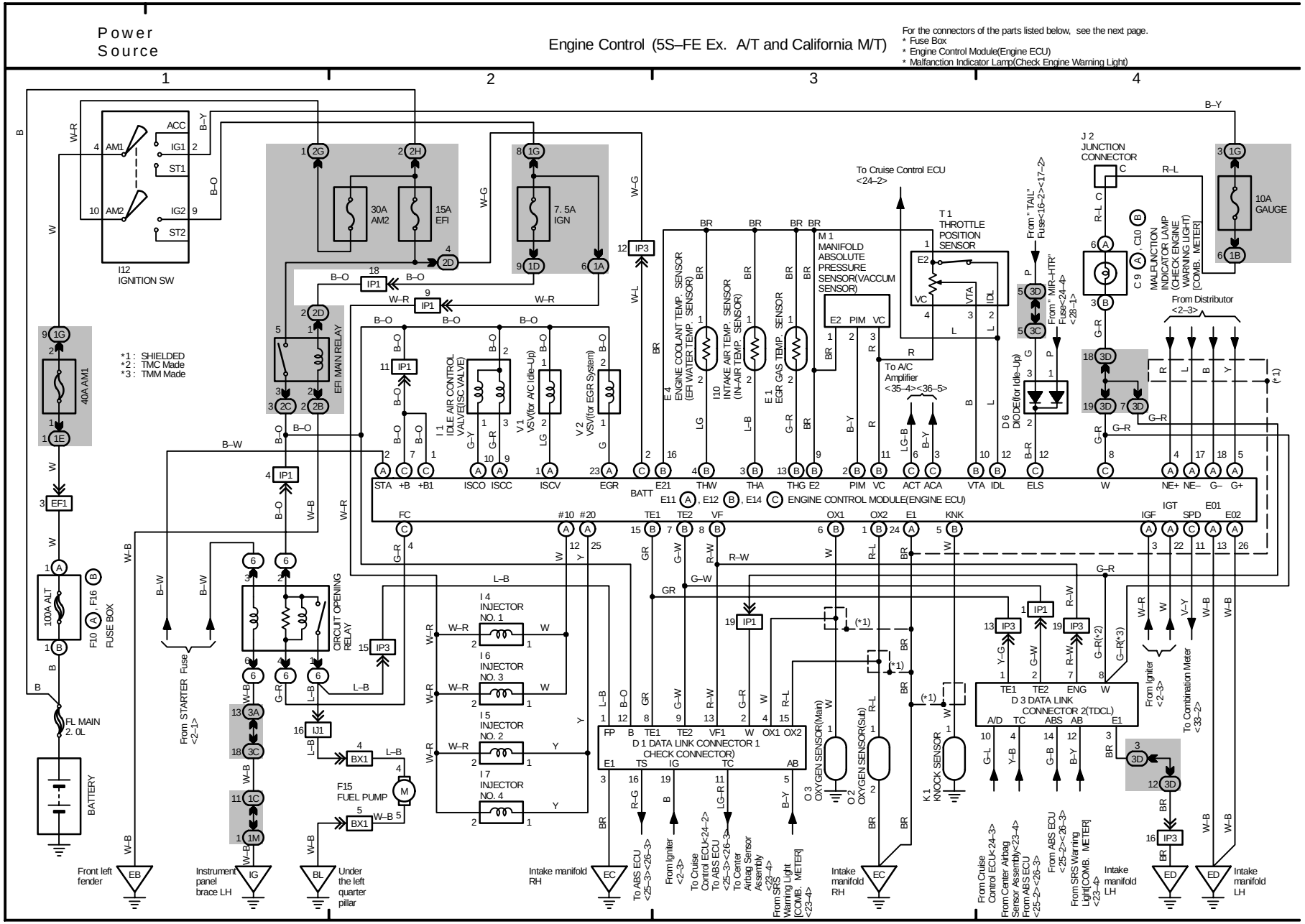

Engine Control (5S–FE Ex. A/T and California M/T)

5 6 7 8

FUSE BOX

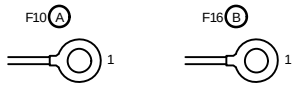

ENGINE CONTROL MODULE(ENGINE ECU)

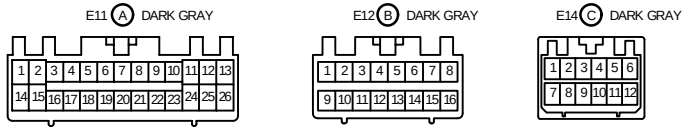

MALFUNCTION INDICATOR LAMP
(CHECK ENGINE WARNING LIGHT)[COMB. METER]

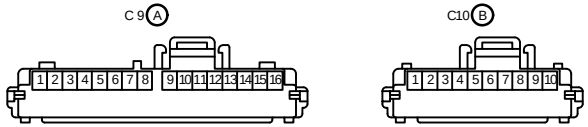

(Cont. next page)

Power Source

Electronic Controlled Transmission and A/T Indicator (1MZ–FE)

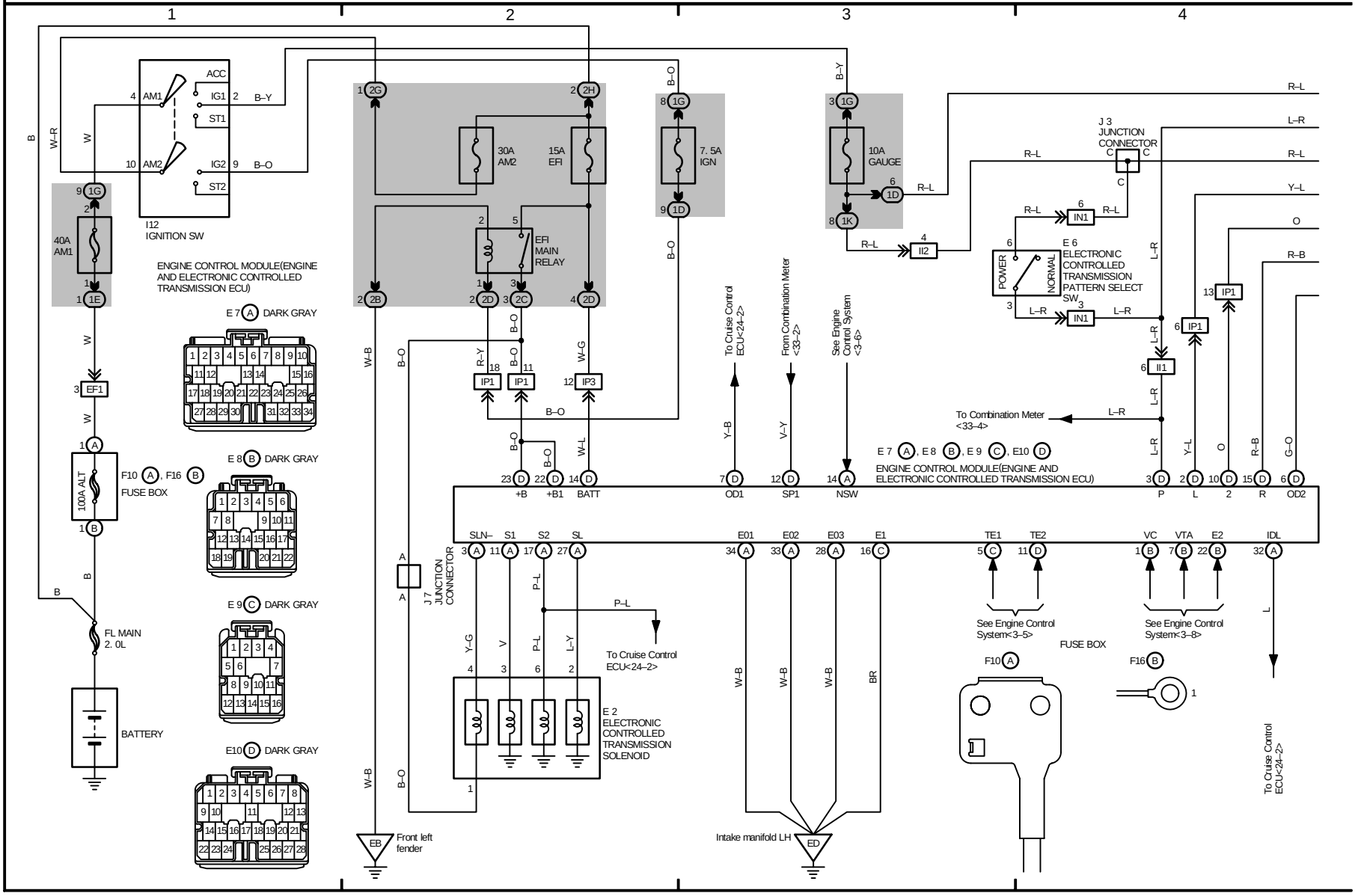

6 CAMRY (Cont' d)

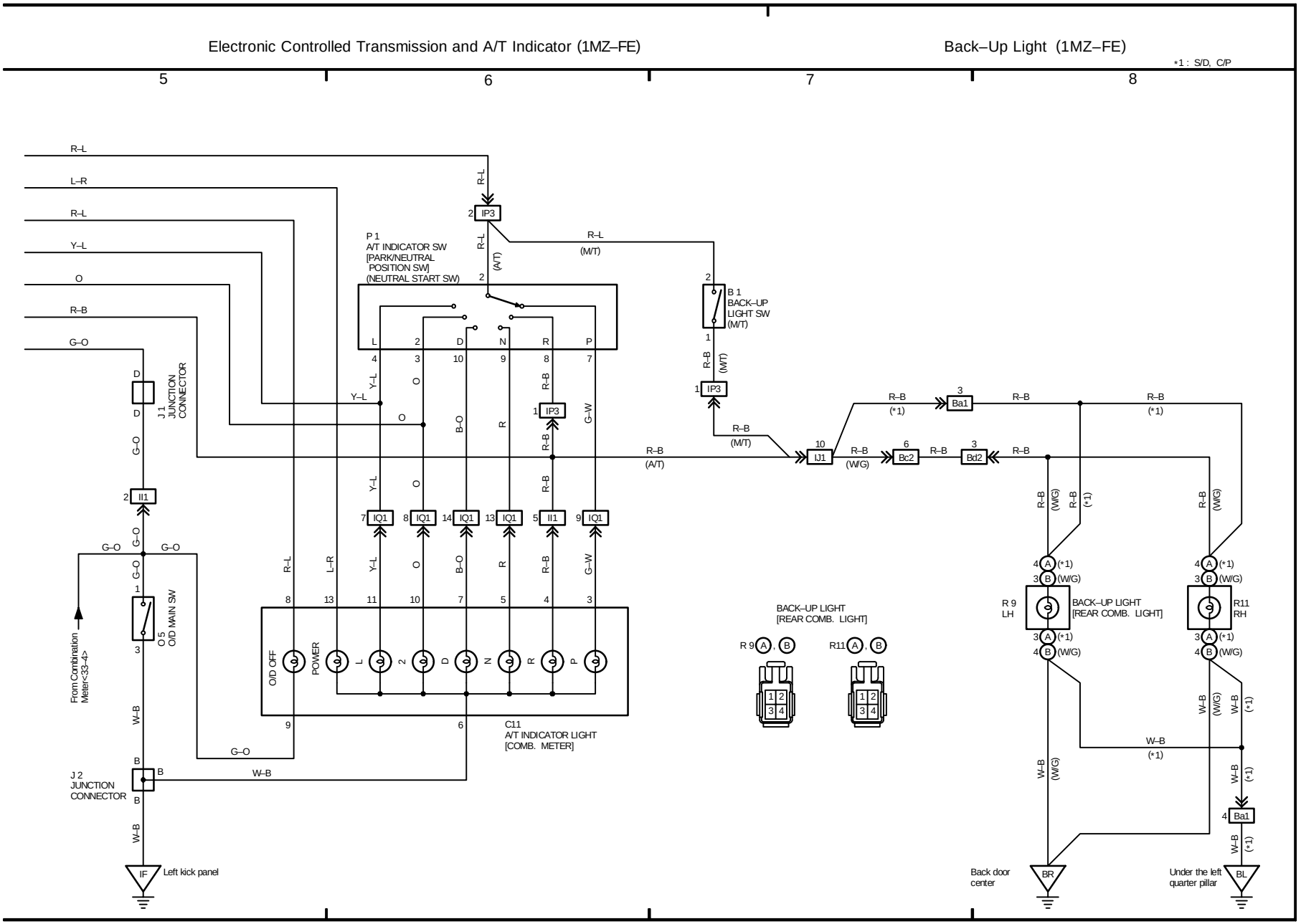

(Cont. next page)

Power Source

Electronic Controlled Transmission and A/T Indicator (5S–FE)

*2 : w/o A/T Indicator Light

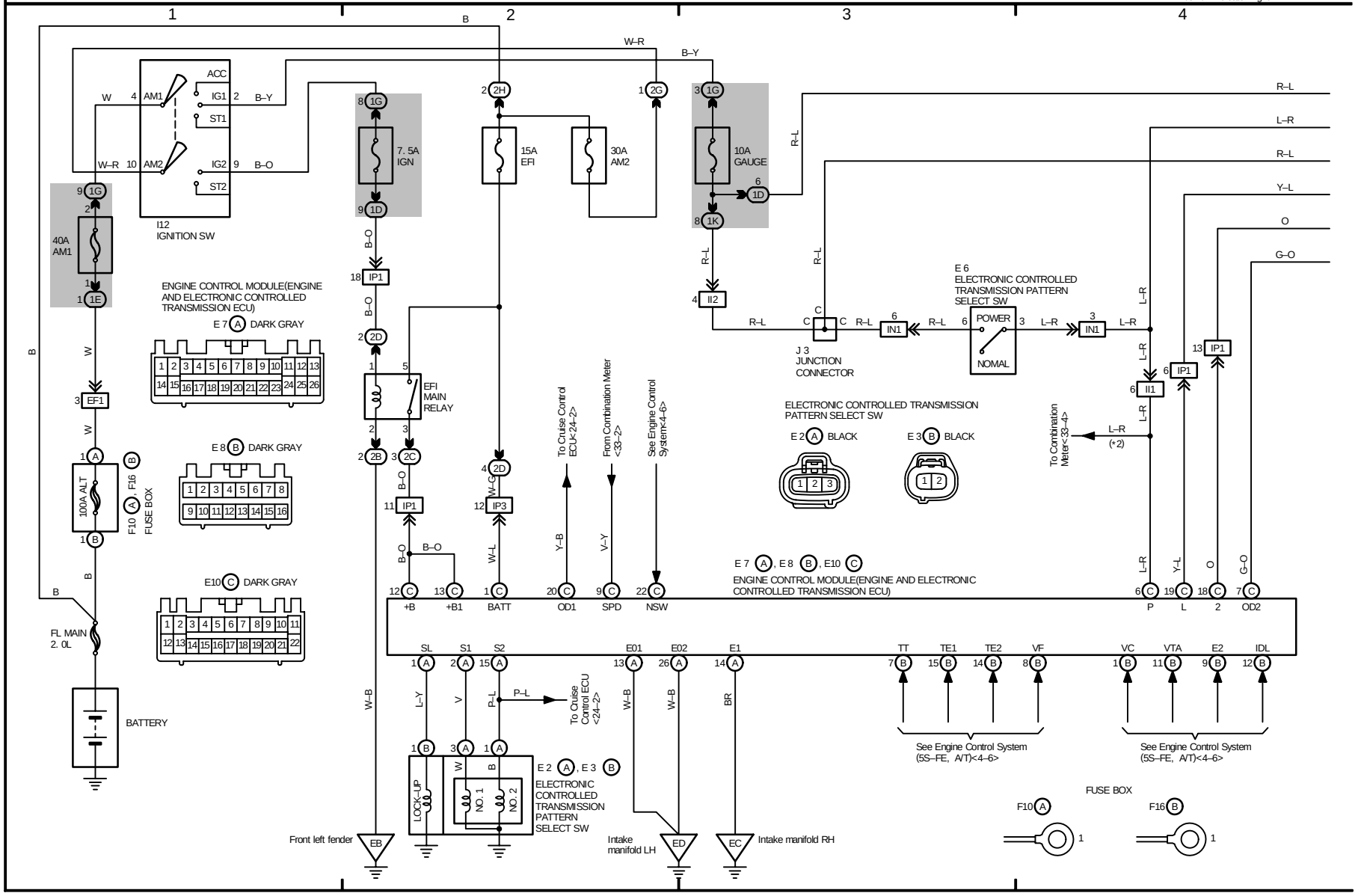

7 CAMRY (Cont' d)

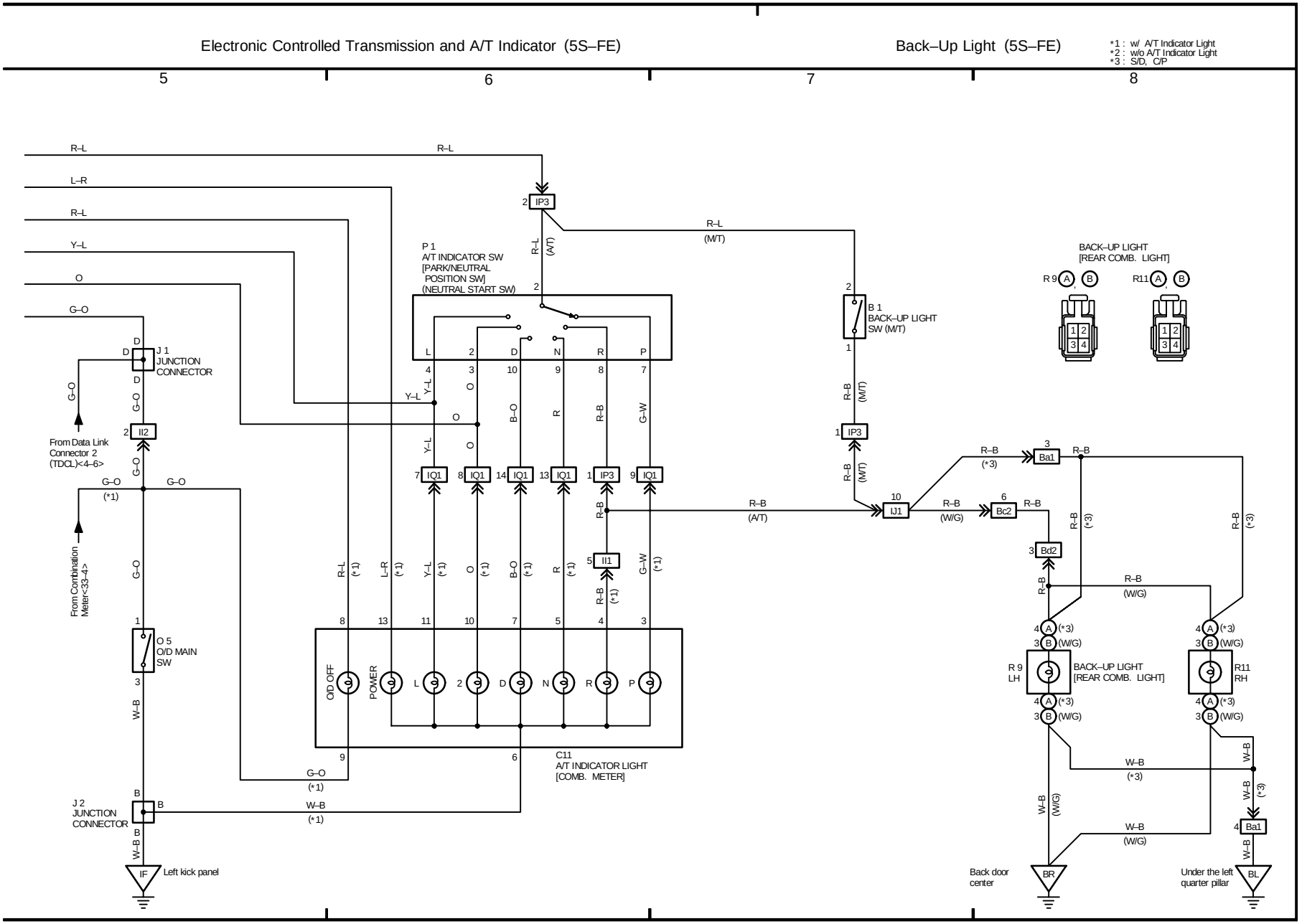

8 CAMRY

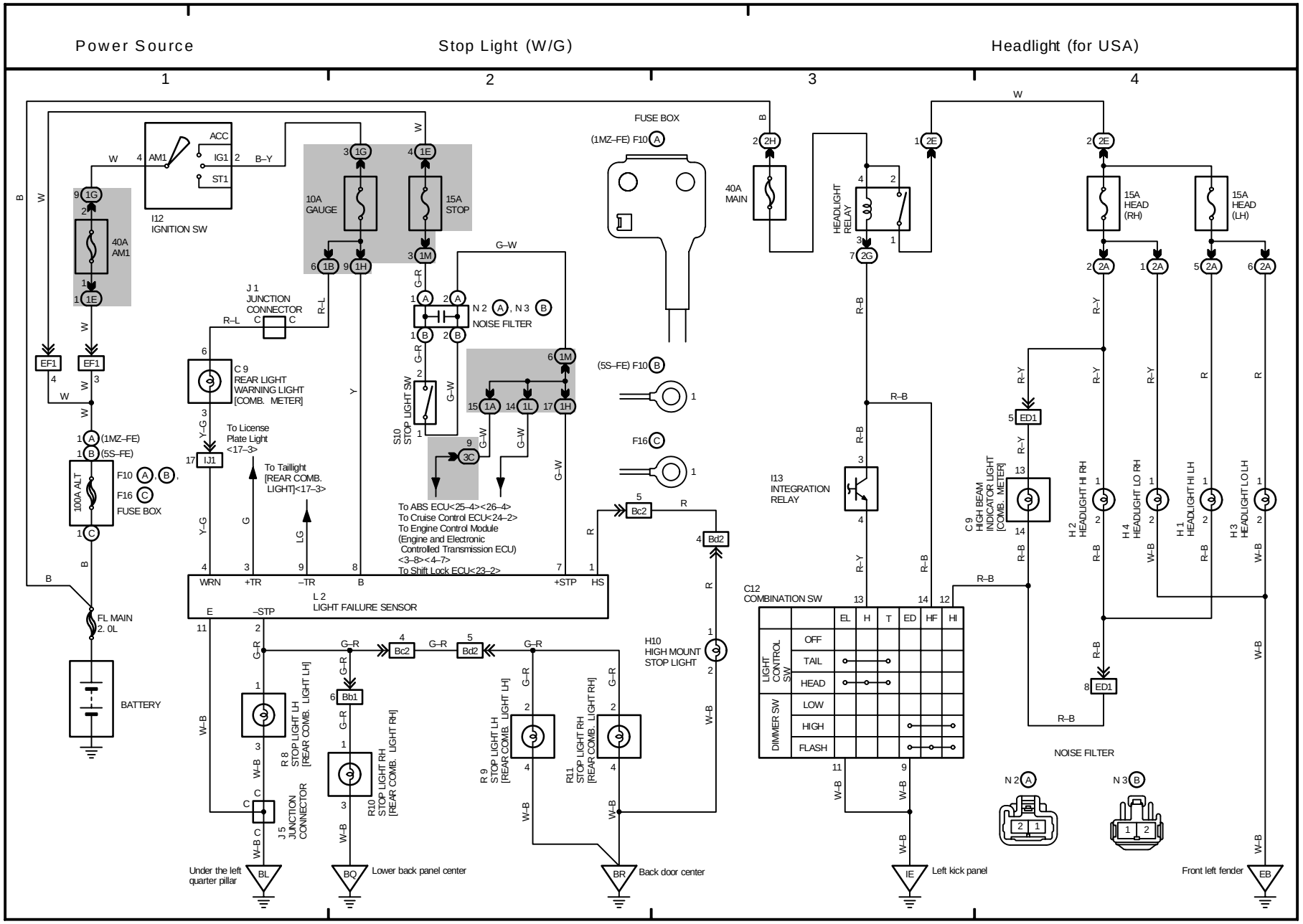
Power Source
Stop Light (W/G)
Headlight (for USA)
1
2
3
4
I12 IGNITION SW
ACC
IG1
ST1
AM1
40A AM1
10A GAUGE
15A STOP
J 1 JUNCTION CONNECTOR
N 2 A, N 3 B
NOISE FILTER
S10 STOP LIGHT SW
C 9 REAR LIGHT WARNING LIGHT [COMB. METER]
To License Plate Light <17–3>
To Taillight [REAR COMB. LIGHT]<17–3>
To ABS ECU<25–4><26–4>
To Cruise Control ECU<24–2>
To Engine Control Module (Engine and Electronic Controlled Transmission ECU) <3–8><4–7>
To Shift Lock ECU<23–2>
L 2 LIGHT FAILURE SENSOR
WRN
+TR
–TR
B
+STP
HS
E
–STP
FUSE BOX
(1MZ–FE) F10 A
(5S–FE) F10 B
F16 C
100A ALT
FL MAIN 2. 0L
BATTERY
40A MAIN
HEADLIGHT RELAY
I13 INTEGRATION RELAY
15A HEAD (RH)
15A HEAD (LH)
C9 HIGH BEAM INDICATOR LIGHT [COMB. METER]
H 2 HEADLIGHT HI RH
H 4 HEADLIGHT LO RH
H 1 HEADLIGHT HI LH
H 3 HEADLIGHT LO LH
C12 COMBINATION SW
LIGHT CONTROL SW
DIMMER SW
OFF
TAIL
HEAD
LOW
HIGH
FLASH
EL
H
T
ED
HF
HI
NOISE FILTER
H10 HIGH MOUNT STOP LIGHT
R 8 STOP LIGHT LH [REAR COMB. LIGHT LH]
R10 STOP LIGHT RH [REAR COMB. LIGHT RH]
R 9 STOP LIGHT LH [REAR COMB. LIGHT LH]
R11 STOP LIGHT RH [REAR COMB. LIGHT RH]
J 5 JUNCTION CONNECTOR
Under the left quarter pillar
Lower back panel center
Back door center
Left kick panel
Front left fender

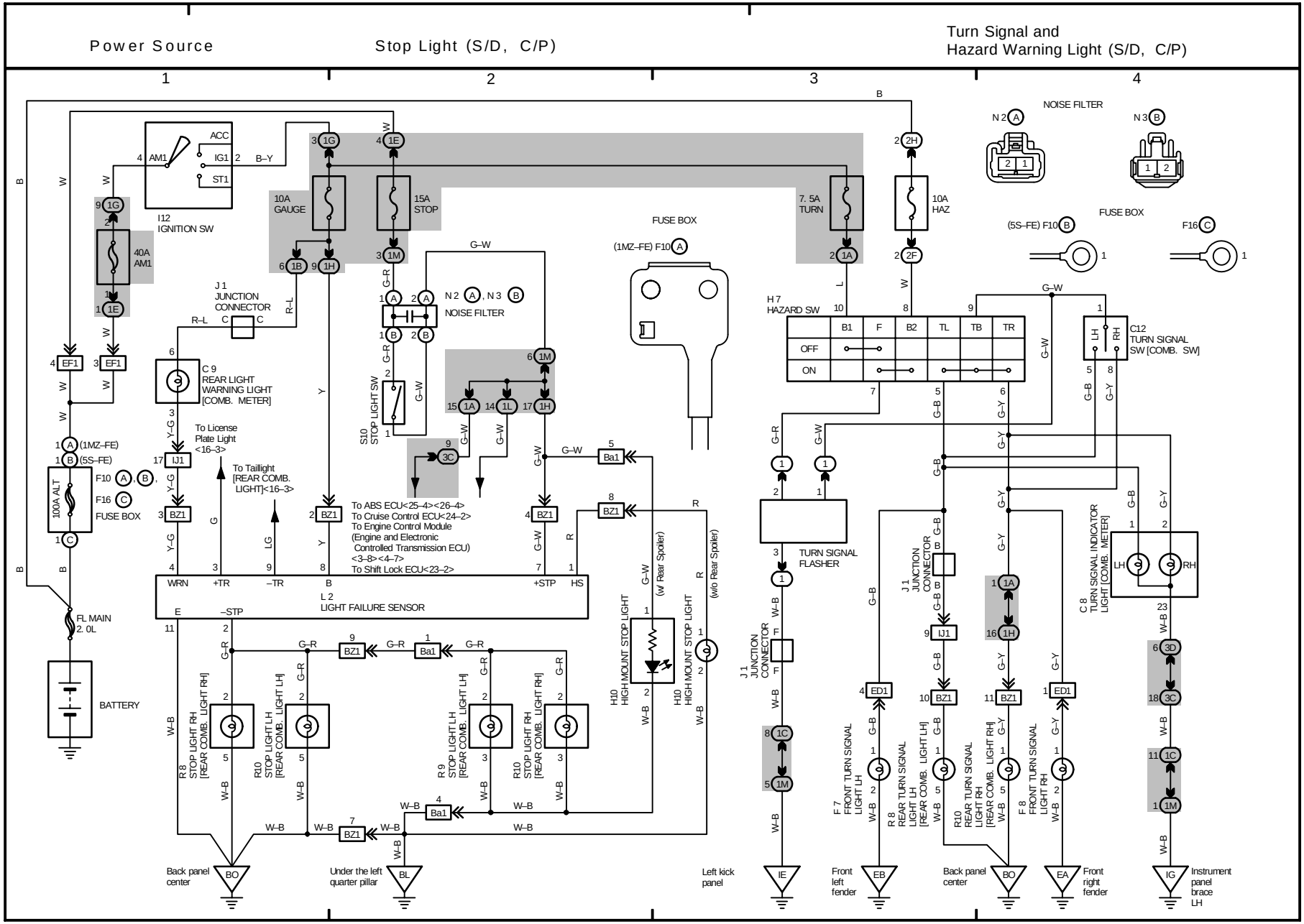
Power Source
Stop Light (S/D, C/P)
Turn Signal and Hazard Warning Light (S/D, C/P)
1
2
3
4
ACC
IG1
ST1
AM1
I12 IGNITION SW
40A AM1
10A GAUGE
15A STOP
7. 5A TURN
10A HAZ
FUSE BOX
(1MZ–FE) F10 A
(5S–FE) F10 B
F16 C
NOISE FILTER
N 2 A
N 3 B
J 1 JUNCTION CONNECTOR
C 9 REAR LIGHT WARNING LIGHT [COMB. METER]
To License Plate Light <16–3>
To Taillight [REAR COMB. LIGHT]<16–3>
S10 STOP LIGHT SW
H 7 HAZARD SW
B1 F B2 TL TB TR
OFF
ON
C12 TURN SIGNAL SW [COMB. SW]
TURN SIGNAL FLASHER
C 8 TURN SIGNAL INDICATOR LIGHT [COMB. METER]
100A ALT
FL MAIN 2. 0L
BATTERY
To ABS ECU<25–4><26–4>
To Cruise Control ECU<24–2>
To Engine Control Module (Engine and Electronic Controlled Transmission ECU) <3–8><4–7>
To Shift Lock ECU<23–2>
L 2 LIGHT FAILURE SENSOR
WRN +TR –TR B +STP HS E –STP
H10 HIGH MOUNT STOP LIGHT
(w/ Rear Spoiler)
(w/o Rear Spoiler)
R 8 STOP LIGHT RH [REAR COMB. LIGHT RH]
R10 STOP LIGHT LH [REAR COMB. LIGHT LH]
R 9 STOP LIGHT LH [REAR COMB. LIGHT LH]
R10 STOP LIGHT RH [REAR COMB. LIGHT RH]
F 7 FRONT TURN SIGNAL LIGHT LH
R 8 REAR TURN SIGNAL LIGHT LH [REAR COMB. LIGHT LH]
R10 REAR TURN SIGNAL LIGHT RH [REAR COMB. LIGHT RH]
F 8 FRONT TURN SIGNAL LIGHT RH
Back panel center
Under the left quarter pillar
Left kick panel
Front left fender
Back panel center
Front right fender
Instrument panel brace LH

10 CAMRY

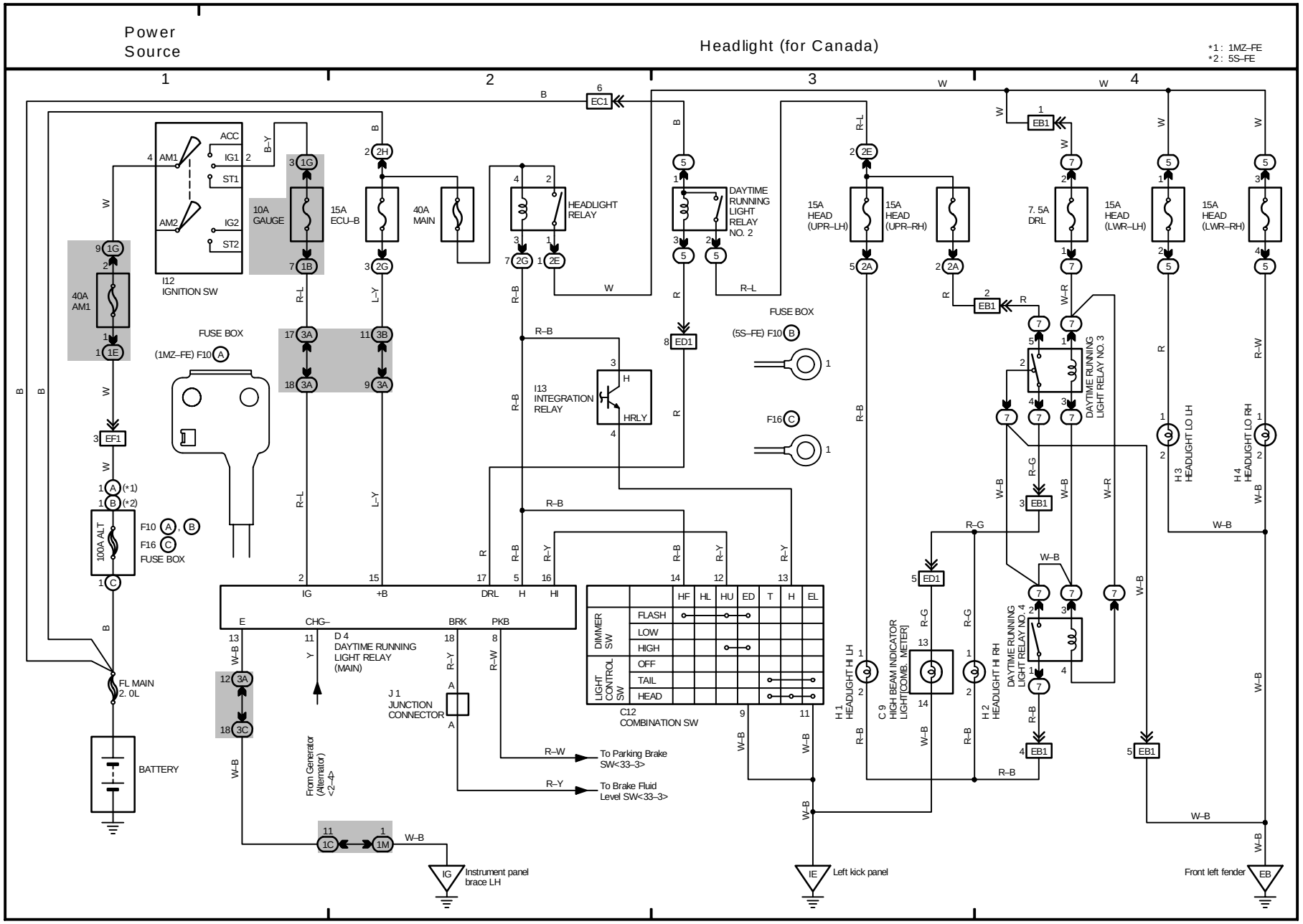
Power Source
Headlight (for Canada)
*1: 1MZ–FE
*2: 5S–FE
1
2
3
4
EC1
EB1
ACC
IG1
ST1
IG2
ST2
AM1
AM2
I12
IGNITION SW
10A GAUGE
15A ECU–B
40A MAIN
40A AM1
HEADLIGHT RELAY
DAYTIME RUNNING LIGHT RELAY NO. 2
15A HEAD (UPR–LH)
15A HEAD (UPR–RH)
7.5A DRL
15A HEAD (LWR–LH)
15A HEAD (LWR–RH)
FUSE BOX
(1MZ–FE) F10 A
(5S–FE) F10 B
F16 C
I13 INTEGRATION RELAY
DAYTIME RUNNING LIGHT RELAY NO. 3
DAYTIME RUNNING LIGHT RELAY NO. 4
H3 HEADLIGHT LO LH
H4 HEADLIGHT LO RH
H1 HEADLIGHT HI LH
H2 HEADLIGHT HI RH
C9 HIGH BEAM INDICATOR LIGHT[COMB. METER]
100A ALT
EF1
ED1
FL MAIN 2.0L
BATTERY
IG
+B
DRL
H
HI
E
CHG–
BRK
PKB
D4 DAYTIME RUNNING LIGHT RELAY (MAIN)
J1 JUNCTION CONNECTOR
C12 COMBINATION SW
HF HL HU ED T H EL
DIMMER SW
FLASH
LOW
HIGH
LIGHT CONTROL SW
OFF
TAIL
HEAD
From Generator (Alternator) <2–4>
To Parking Brake SW<33–3>
To Brake Fluid Level SW<33–3>
Instrument panel brace LH
Left kick panel
Front left fender
IG
IE
EB

Power Source

Interior Light (S/D, C/P w/ Key Illuminated Entry)

*1: TMC Made
*2: TMM Made

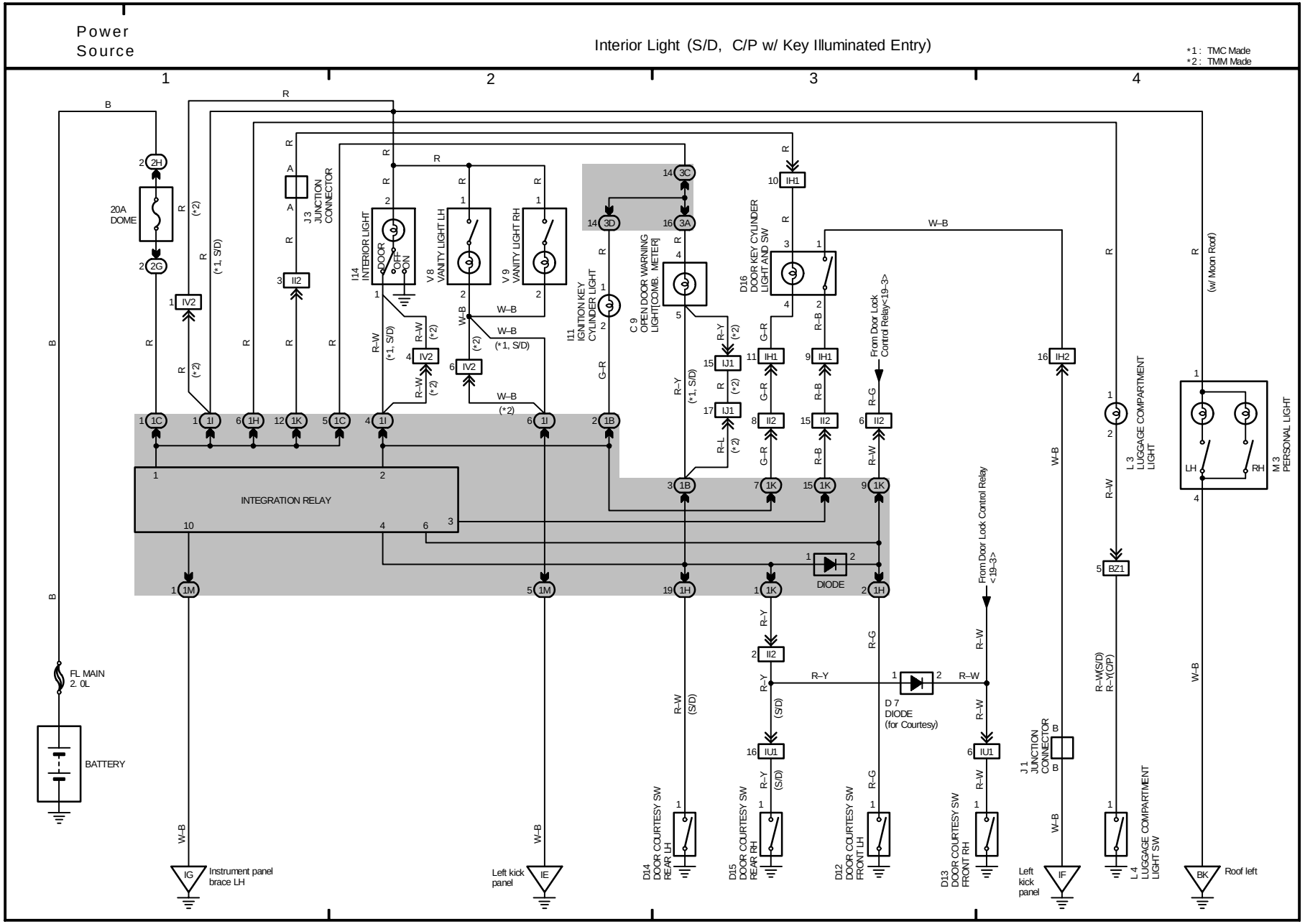

12 CAMRY

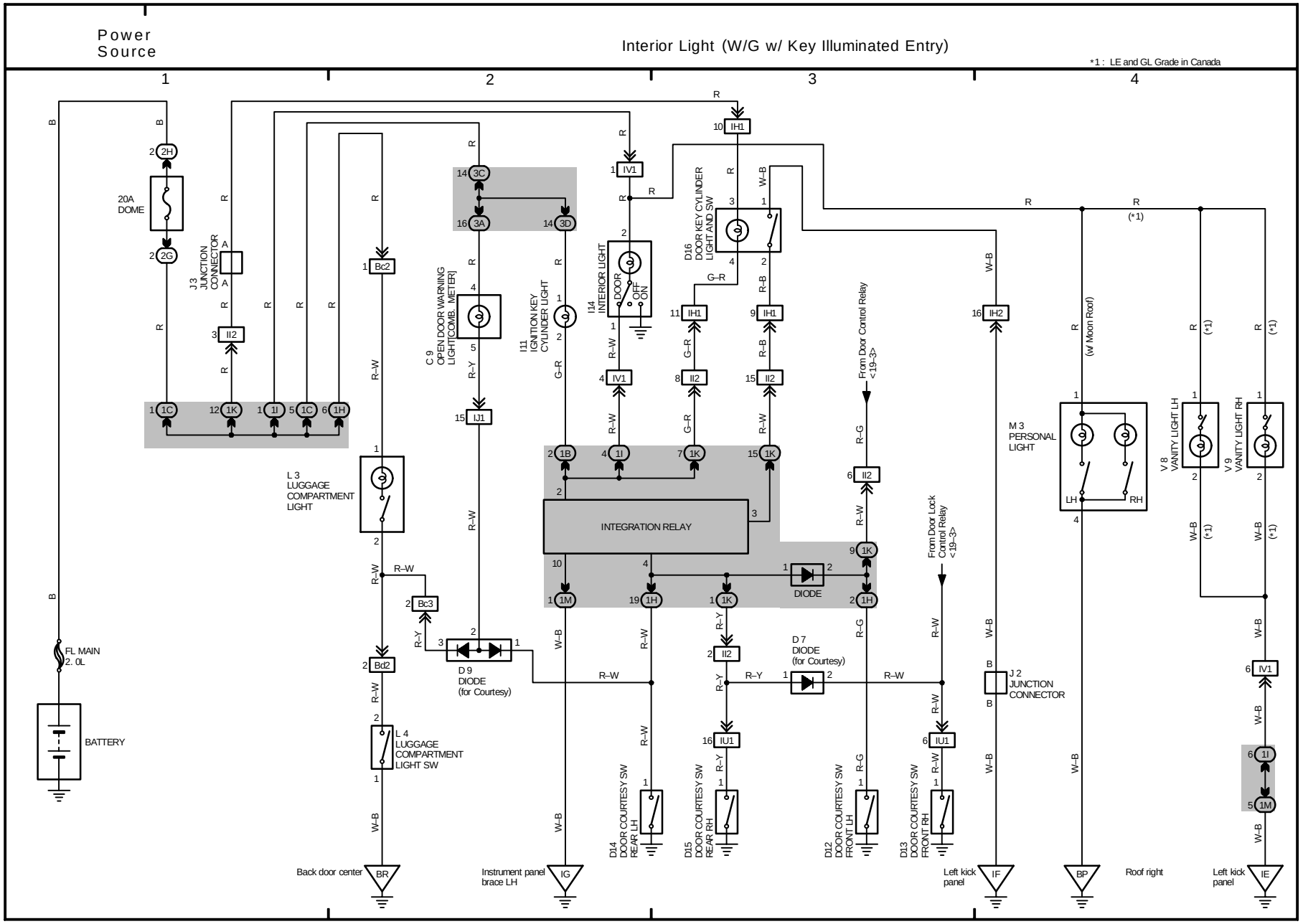
Power Source
Interior Light (W/G w/ Key Illuminated Entry)
*1 : LE and GL Grade in Canada
1
2
3
4
20A DOME
J3 JUNCTION CONNECTOR
L 3 LUGGAGE COMPARTMENT LIGHT
C 9 OPEN DOOR WARNING LIGHT[COMB. METER]
I11 IGNITION KEY CYLINDER LIGHT
I14 INTERIOR LIGHT
D16 DOOR KEY CYLINDER LIGHT AND SW
From Door Control Relay <19-3>
From Door Lock Control Relay <19-3>
INTEGRATION RELAY
DIODE
D 9 DIODE (for Courtesy)
D 7 DIODE (for Courtesy)
L 4 LUGGAGE COMPARTMENT LIGHT SW
M 3 PERSONAL LIGHT
V 8 VANITY LIGHT LH
V 9 VANITY LIGHT RH
J 2 JUNCTION CONNECTOR
(w/ Moon Roof)
FL MAIN 2. 0L
BATTERY
D14 DOOR COURTESY SW REAR LH
D15 DOOR COURTESY SW REAR RH
D12 DOOR COURTESY SW FRONT LH
D13 DOOR COURTESY SW FRONT RH
Back door center
Instrument panel brace LH
Left kick panel
Roof right
Left kick panel

13 CAMRY

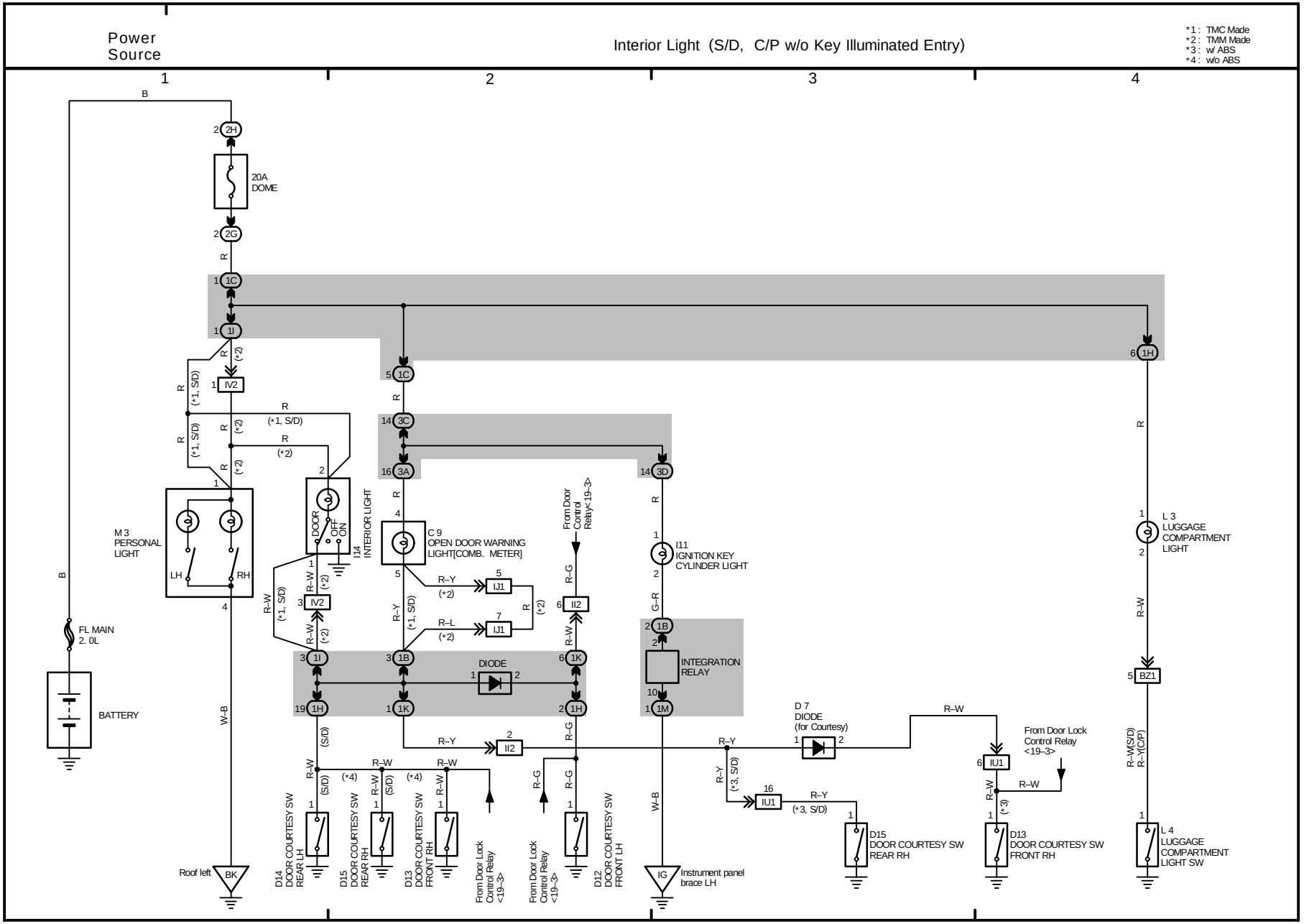
Power Source
Interior Light (S/D, C/P w/o Key Illuminated Entry)
*1: TMC Made
*2: TMM Made
*3: w/ ABS
*4: w/o ABS
1
2
3
4
B
2H
20A DOME
2G
R
1C
1I
IV2
(*1, S/D)
(*2)
M 3 PERSONAL LIGHT
LH
RH
DOOR
OFF
ON
I14 INTERIOR LIGHT
C 9 OPEN DOOR WARNING LIGHT[COMB. METER]
IJ1
R–Y
R–L
R–W
R–G
From Door Control Relay<19–3>
II2
DIODE
3C
3A
3D
I11 IGNITION KEY CYLINDER LIGHT
G–R
1B
INTEGRATION RELAY
1K
1M
1H
6 1H
5 1C
L 3 LUGGAGE COMPARTMENT LIGHT
BZ1
R–W(S/D)
R–Y(C/P)
L 4 LUGGAGE COMPARTMENT LIGHT SW
FL MAIN 2. 0L
BATTERY
W–B
Roof left
BK
IG
Instrument panel brace LH
D 7 DIODE (for Courtesy)
IU1
(*3, S/D)
From Door Lock Control Relay <19–3>
D15 DOOR COURTESY SW REAR RH
D13 DOOR COURTESY SW FRONT RH
D14 DOOR COURTESY SW REAR LH
D12 DOOR COURTESY SW FRONT LH
(S/D)
(*4)

14 CAMRY

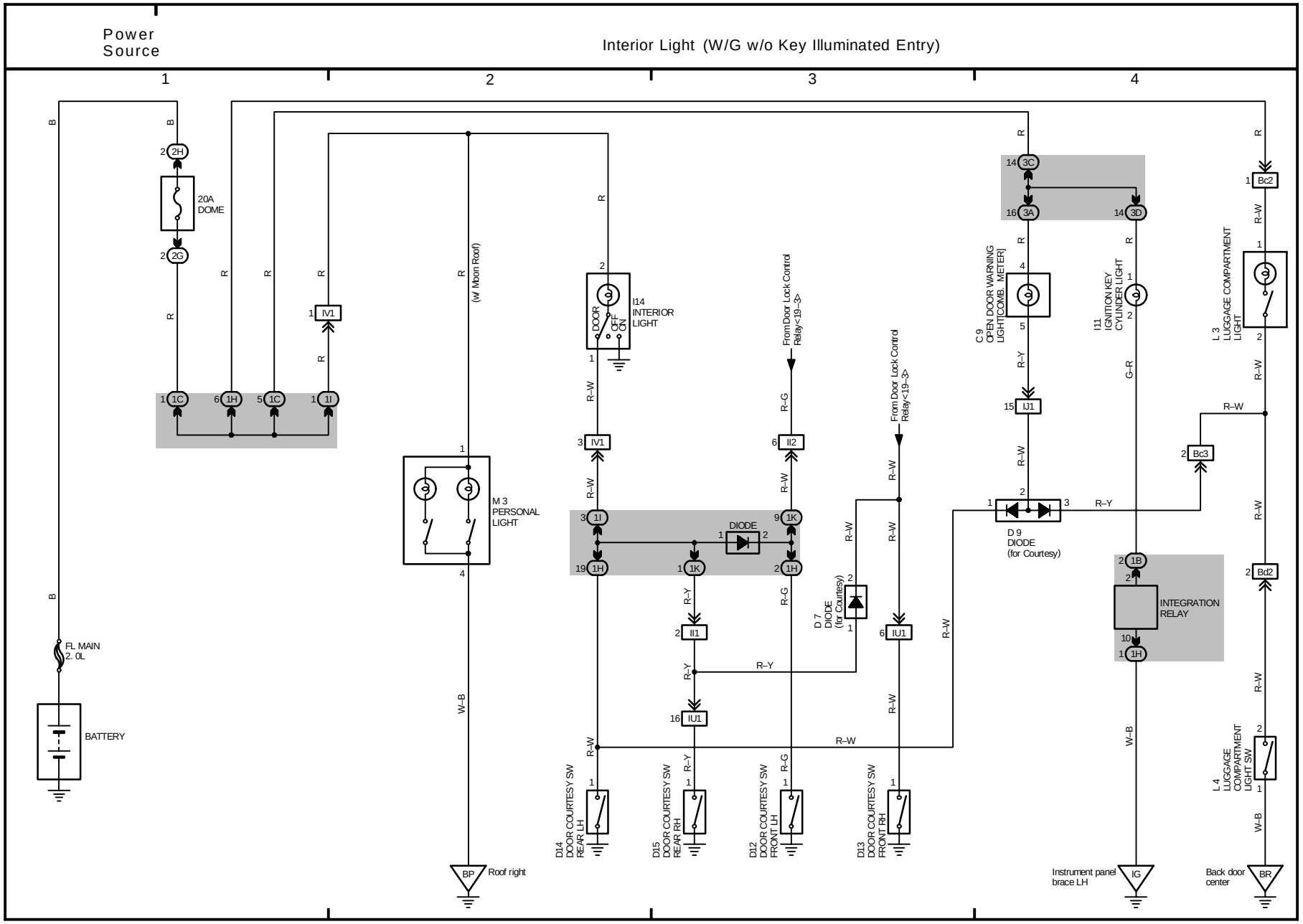
Power Source
Interior Light (W/G w/o Key Illuminated Entry)
1
2
3
4
FL MAIN 2. 0L
BATTERY
20A DOME
(w/ Moon Roof)
M 3 PERSONAL LIGHT
I14 INTERIOR LIGHT
DOOR
OFF
ON
From Door Lock Control Relay<19–3>
DIODE
D 7 DIODE (for Courtesy)
D 9 DIODE (for Courtesy)
C 9 OPEN DOOR WARNING LIGHT[COMB. METER]
I11 IGNITION KEY CYLINDER LIGHT
L 3 LUGGAGE COMPARTMENT LIGHT
INTEGRATION RELAY
D14 DOOR COURTESY SW REAR LH
D15 DOOR COURTESY SW REAR RH
D12 DOOR COURTESY SW FRONT LH
D13 DOOR COURTESY SW FRONT RH
L 4 LUGGAGE COMPARTMENT LIGHT SW
BP
Roof right
IG
Instrument panel brace LH
BR
Back door center

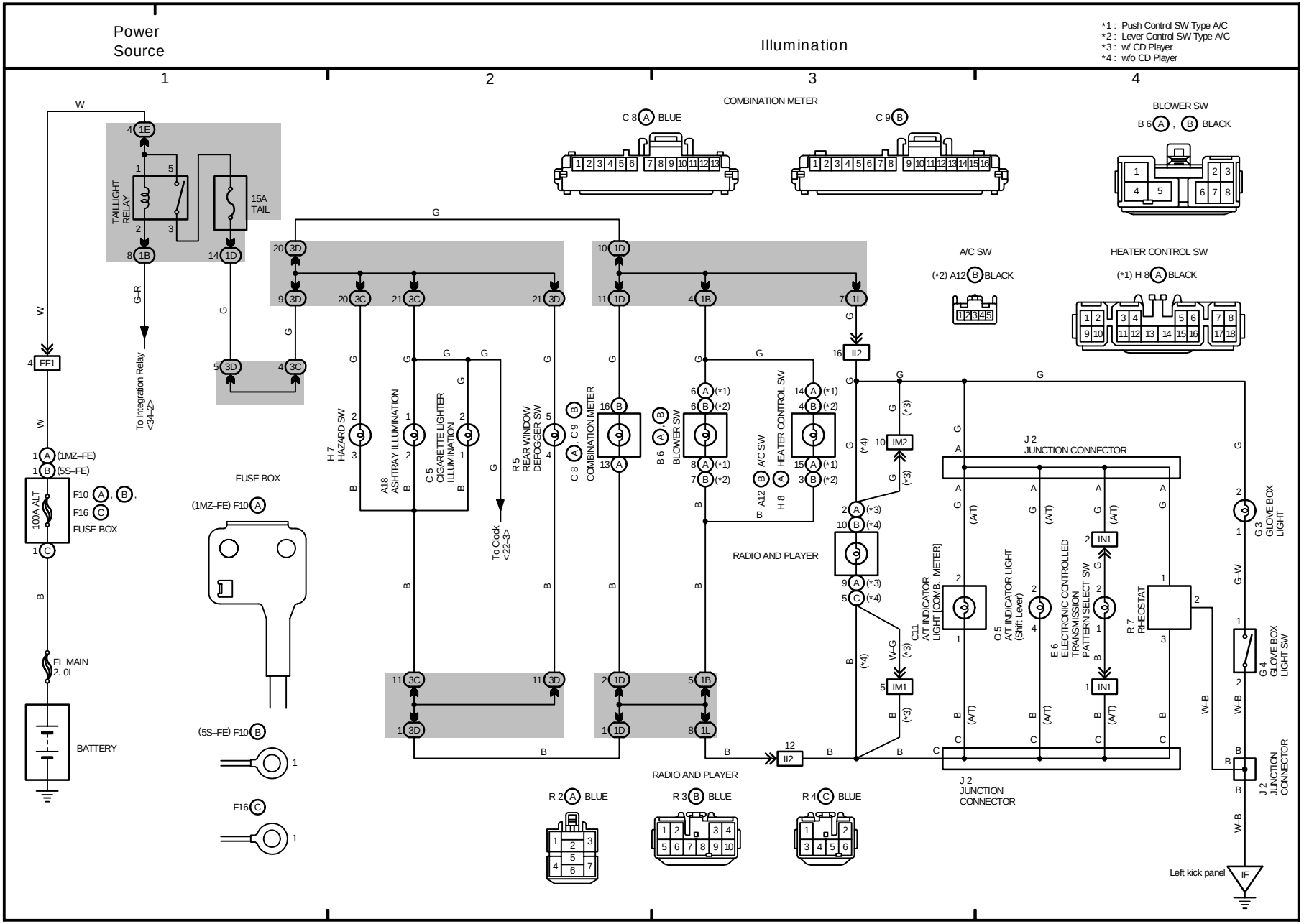
Power Source
Illumination
*1 : Push Control SW Type A/C
*2 : Lever Control SW Type A/C
*3 : w/ CD Player
*4 : w/o CD Player
1
2
3
4
COMBINATION METER
C 8 (A) BLUE
C 9 (B)
BLOWER SW
B 6 (A) , (B) BLACK
A/C SW
(*2) A12 (B) BLACK
HEATER CONTROL SW
(*1) H 8 (A) BLACK
TAILLIGHT RELAY
15A TAIL
To Integration Relay <34–2>
EF1
(1MZ–FE)
(5S–FE)
100A ALT
F10 (A) , (B) ,
F16 (C)
FUSE BOX
FL MAIN 2. 0L
BATTERY
FUSE BOX
(1MZ–FE) F10 (A)
(5S–FE) F10 (B)
F16 (C)
H 7 HAZARD SW
A18 ASHTRAY ILLUMINATION
C 5 CIGARETTE LIGHTER ILLUMINATION
To Clock <22–3>
R 5 REAR WINDOW DEFOGGER SW
C 8 (A) , C 9 (B) COMBINATION METER
B 6 (B) (A) BLOWER SW
A/C SW
A12 B
H 8 A
HEATER CONTROL SW
RADIO AND PLAYER
J 2 JUNCTION CONNECTOR
C11 A/T INDICATOR LIGHT [COMB. METER]
O 5 A/T INDICATOR LIGHT (Shift Lever)
E 6 ELECTRONIC CONTROLLED TRANSMISSION PATTERN SELECT SW
R 7 RHEOSTAT
G 3 GLOVE BOX LIGHT
G 4 GLOVE BOX LIGHT SW
J 2 JUNCTION CONNECTOR
Left kick panel
IF
R 2 (A) BLUE
R 3 (B) BLUE
R 4 (C) BLUE

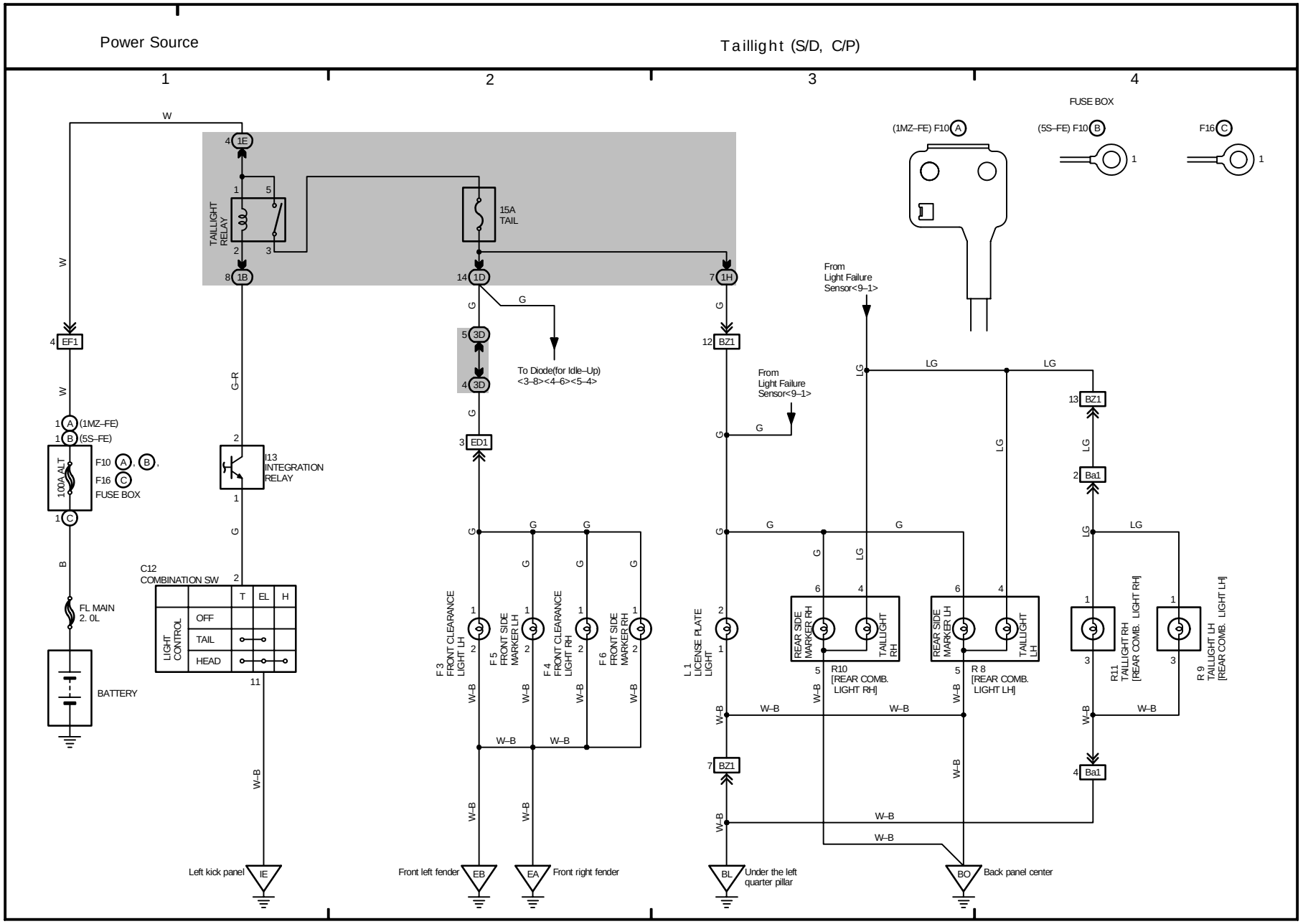
Power Source
Taillight (S/D, C/P)
1
2
3
4
FUSE BOX
(1MZ–FE) F10 A
(5S–FE) F10 B
F16 C
TAILLIGHT RELAY
15A TAIL
100A ALT
F10 A, B,
F16 C
FUSE BOX
(1MZ–FE)
(5S–FE)
FL MAIN 2. 0L
BATTERY
I13 INTEGRATION RELAY
C12 COMBINATION SW
LIGHT CONTROL
OFF
TAIL
HEAD
T
EL
H
To Diode(for Idle–Up) <3–8><4–6><5–4>
From Light Failure Sensor<9–1>
From Light Failure Sensor<9–1>
F 3 FRONT CLEARANCE LIGHT LH
F 5 FRONT SIDE MARKER LH
F 4 FRONT CLEARANCE LIGHT RH
F 6 FRONT SIDE MARKER RH
L 1 LICENSE PLATE LIGHT
REAR SIDE MARKER RH
TAILLIGHT RH
REAR SIDE MARKER LH
TAILLIGHT LH
R10 [REAR COMB. LIGHT RH]
R 8 [REAR COMB. LIGHT LH]
R11 TAILLIGHT RH [REAR COMB. LIGHT RH]
R 9 TAILLIGHT LH [REAR COMB. LIGHT LH]
Left kick panel IE
Front left fender EB
EA Front right fender
BL Under the left quarter pillar
BO Back panel center

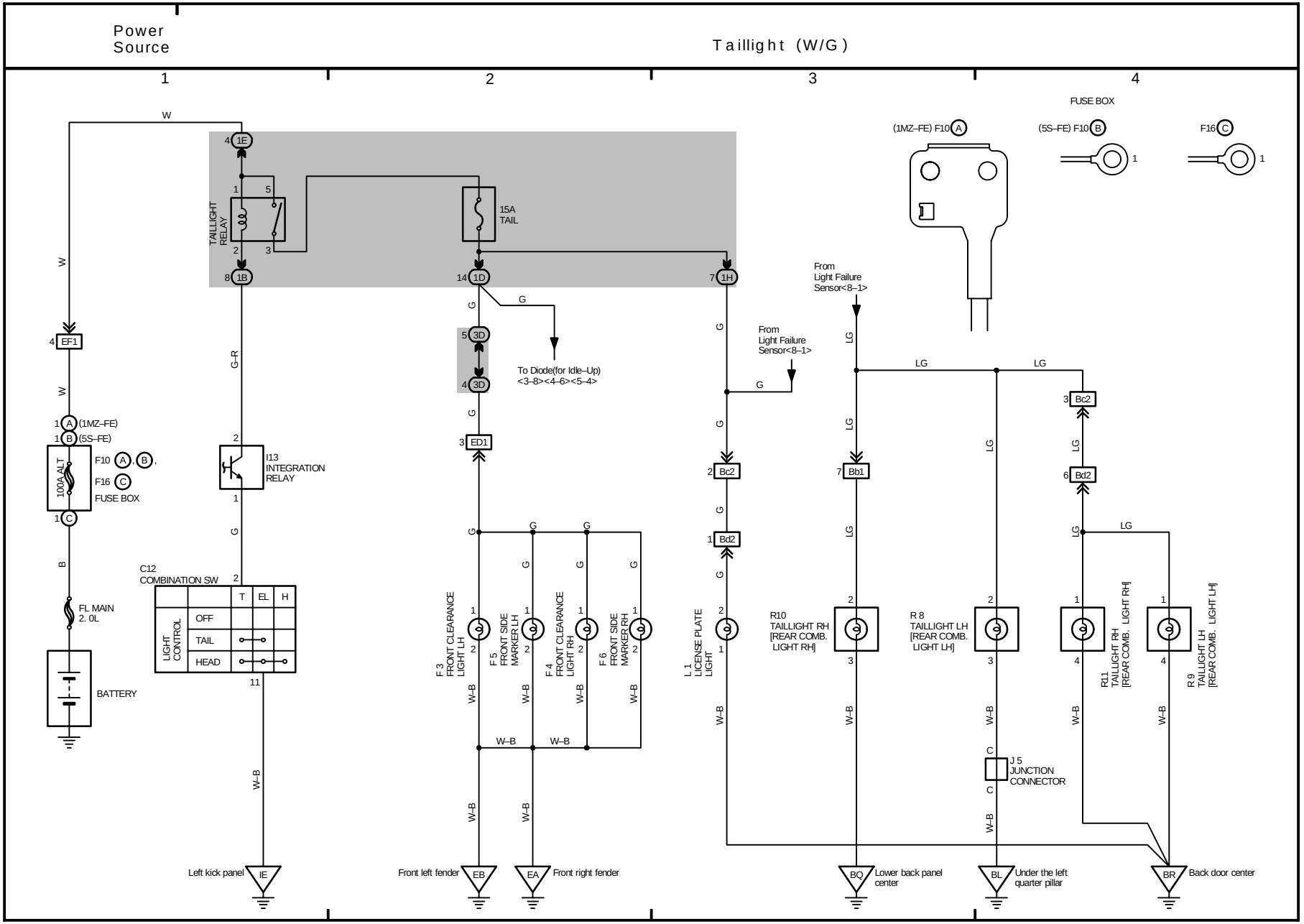
Power Source
Taillight (W/G)
1
2
3
4
FUSE BOX
(1MZ–FE) F10 A
(5S–FE) F10 B
F16 C
TAILLIGHT RELAY
15A TAIL
100A ALT
F10 A, B,
F16 C
FUSE BOX
EF1
(1MZ–FE)
(5S–FE)
I13 INTEGRATION RELAY
C12 COMBINATION SW
LIGHT CONTROL
OFF
TAIL
HEAD
T
EL
H
FL MAIN 2. 0L
BATTERY
To Diode(for Idle–Up) <3–8><4–6><5–4>
From Light Failure Sensor<8–1>
From Light Failure Sensor<8–1>
F 3 FRONT CLEARANCE LIGHT LH
F 5 FRONT SIDE MARKER LH
F 4 FRONT CLEARANCE LIGHT RH
F 6 FRONT SIDE MARKER RH
L 1 LICENSE PLATE LIGHT
R10 TAILLIGHT RH [REAR COMB. LIGHT RH]
R 8 TAILLIGHT LH [REAR COMB. LIGHT LH]
R11 TAILLIGHT RH [REAR COMB. LIGHT RH]
R 9 TAILLIGHT LH [REAR COMB. LIGHT LH]
J 5 JUNCTION CONNECTOR
Left kick panel IE
Front left fender EB
EA Front right fender
BQ Lower back panel center
BL Under the left quarter pillar
BR Back door center

18 CAMRY

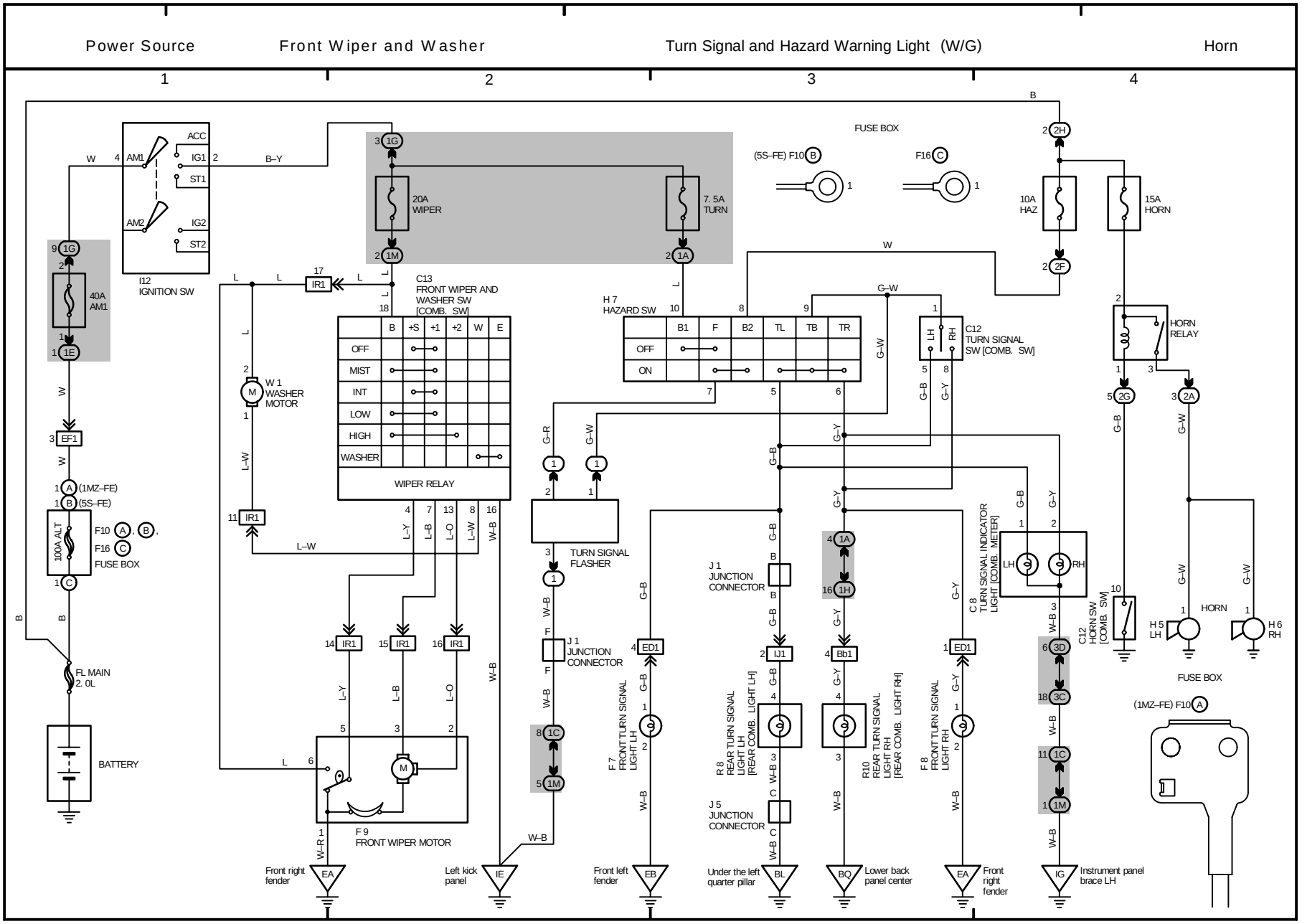
Power Source
Front Wiper and Washer
Turn Signal and Hazard Warning Light (W/G)
Horn
1
2
3
4
I12 IGNITION SW
ACC
IG1
ST1
IG2
ST2
AM1
AM2
40A AM1
20A WIPER
7. 5A TURN
10A HAZ
15A HORN
FUSE BOX
(5S–FE) F10 B
F16 C
C13 FRONT WIPER AND WASHER SW [COMB. SW]
B +S +1 +2 W E
OFF
MIST
INT
LOW
HIGH
WASHER
WIPER RELAY
W 1 WASHER MOTOR
F 9 FRONT WIPER MOTOR
H 7 HAZARD SW
B1 F B2 TL TB TR
OFF
ON
C12 TURN SIGNAL SW [COMB. SW]
LH
RH
HORN RELAY
TURN SIGNAL FLASHER
J 1 JUNCTION CONNECTOR
J 5 JUNCTION CONNECTOR
F 7 FRONT TURN SIGNAL LIGHT LH
F 8 FRONT TURN SIGNAL LIGHT RH
R 8 REAR TURN SIGNAL LIGHT LH [REAR COMB. LIGHT LH]
R10 REAR TURN SIGNAL LIGHT RH [REAR COMB. LIGHT RH]
C 8 TURN SIGNAL INDICATOR LIGHT [COMB. METER]
C12 HORN SW [COMB. SW]
H 5 LH
H 6 RH
HORN
FUSE BOX
(1MZ–FE) F10 A
100A ALT
F10 A, B,
F16 C
FUSE BOX
FL MAIN 2. 0L
BATTERY
(1MZ–FE)
(5S–FE)
Front right fender
Left kick panel
Front left fender
Under the left quarter pillar
Lower back panel center
Front right fender
Instrument panel brace LH

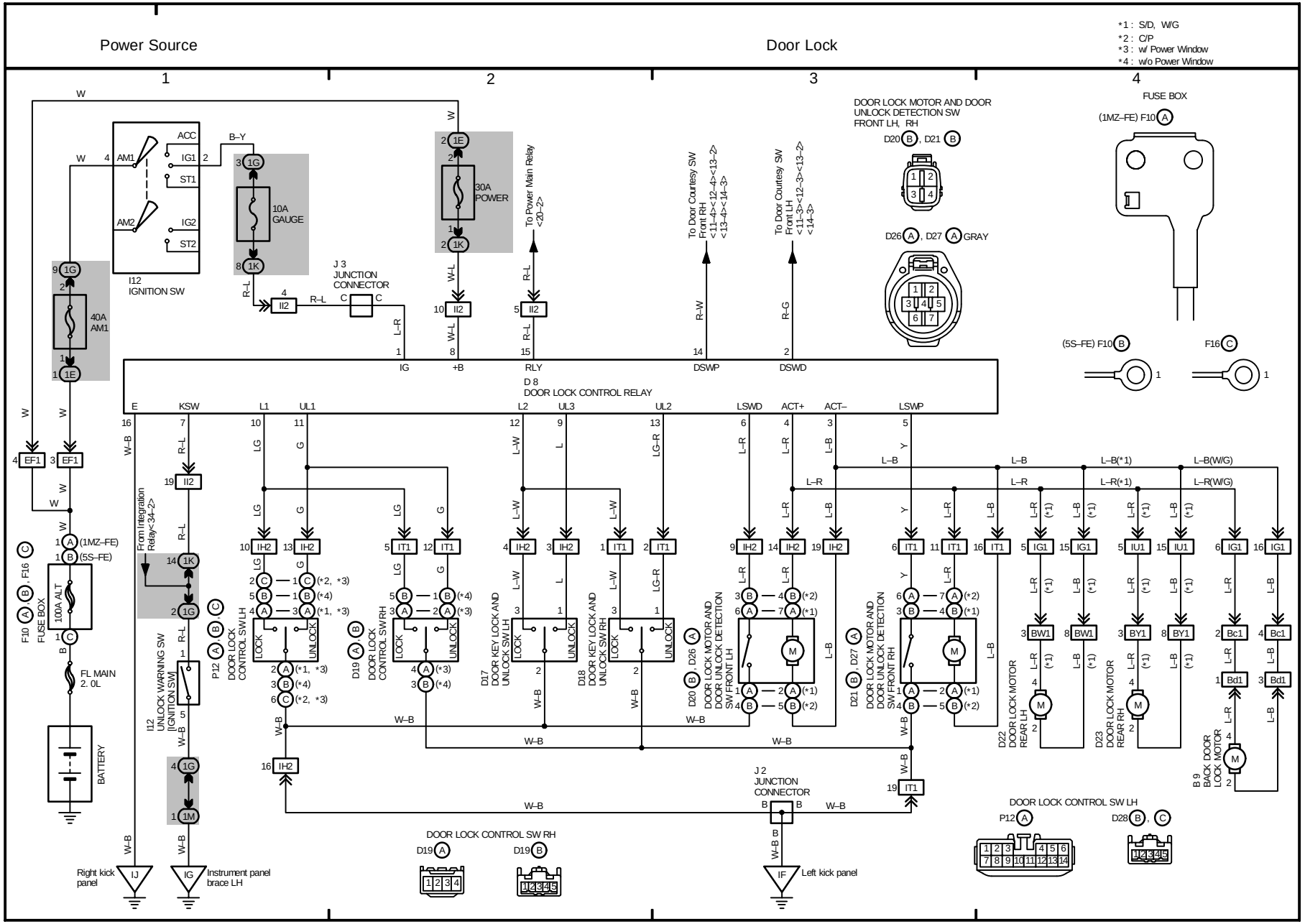
Power Source
Door Lock
*1 : S/D, W/G
*2 : C/P
*3 : w/ Power Window
*4 : w/o Power Window
1
2
3
4
ACC
IG1
ST1
IG2
ST2
AM1
AM2
I12
IGNITION SW
10A
GAUGE
30A
POWER
40A
AM1
J 3
JUNCTION
CONNECTOR
To Power Main Relay
<20–2>
To Door Courtesy SW
Front RH
<11–4><12–4><13–2>
<13–4><14–3>
To Door Courtesy SW
Front LH
<11–3><12–3><13–2>
<14–3>
DOOR LOCK MOTOR AND DOOR
UNLOCK DETECTION SW
FRONT LH, RH
D20 B , D21 B
D26 A , D27 A GRAY
FUSE BOX
(1MZ–FE) F10 A
(5S–FE) F10 B
F16 C
IG
+B
RLY
DSWP
DSWD
D 8
DOOR LOCK CONTROL RELAY
E
KSW
L1
UL1
L2
UL3
UL2
LSWD
ACT+
ACT–
LSWP
From Integration
Relay<34–2>
100A ALT
FUSE BOX
FL MAIN
2. 0L
BATTERY
I12
UNLOCK WARNING SW
[IGNITION SW]
DOOR LOCK
CONTROL SW LH
DOOR LOCK
CONTROL SW RH
D17
DOOR KEY LOCK AND
UNLOCK SW LH
D18
DOOR KEY LOCK AND
UNLOCK SW RH
DOOR LOCK MOTOR AND
DOOR UNLOCK DETECTION
SW FRONT LH
DOOR LOCK MOTOR AND
DOOR UNLOCK DETECTION
SW FRONT RH
D22
DOOR LOCK MOTOR
REAR LH
D23
DOOR LOCK MOTOR
REAR RH
B 9
BACK DOOR
LOCK MOTOR
J 2
JUNCTION
CONNECTOR
DOOR LOCK CONTROL SW RH
DOOR LOCK CONTROL SW LH
Right kick
panel
Instrument panel
brace LH
Left kick panel

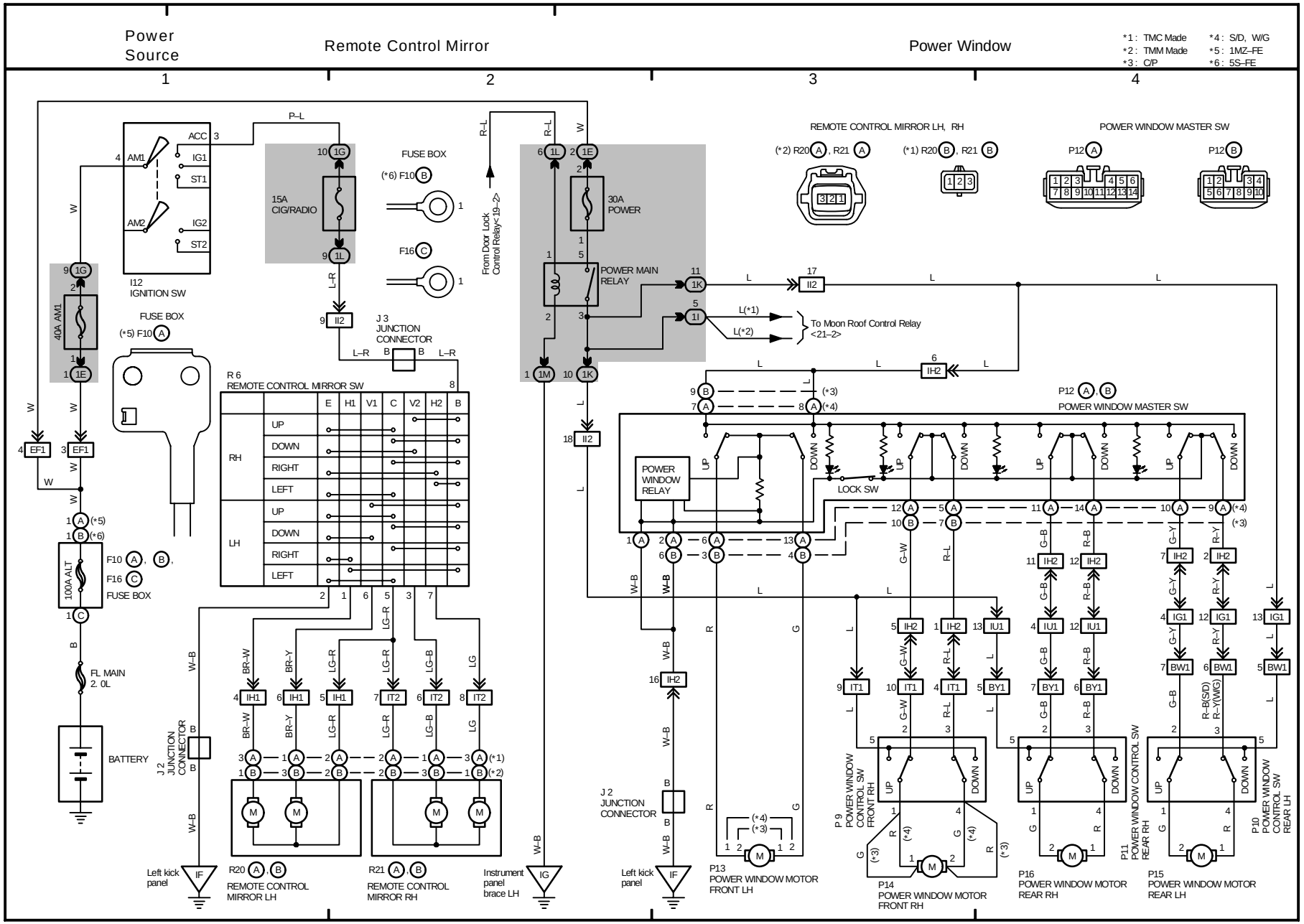
Power Source
Remote Control Mirror
Power Window
1
2
3
4
*1: TMC Made
*2: TMM Made
*3: C/P
*4: S/D, W/G
*5: 1MZ–FE
*6: 5S–FE
REMOTE CONTROL MIRROR LH, RH
POWER WINDOW MASTER SW
ACC
IG1
ST1
IG2
ST2
AM1
AM2
I12
IGNITION SW
15A CIG/RADIO
FUSE BOX
30A POWER
POWER MAIN RELAY
From Door Lock Control Relay<19–2>
To Moon Roof Control Relay <21–2>
40A AM1
100A ALT
FL MAIN 2.0L
BATTERY
J 3 JUNCTION CONNECTOR
J 2 JUNCTION CONNECTOR
R 6
REMOTE CONTROL MIRROR SW
RH
LH
UP
DOWN
RIGHT
LEFT
POWER WINDOW RELAY
LOCK SW
R20 REMOTE CONTROL MIRROR LH
R21 REMOTE CONTROL MIRROR RH
P13 POWER WINDOW MOTOR FRONT LH
P14 POWER WINDOW MOTOR FRONT RH
P16 POWER WINDOW MOTOR REAR RH
P15 POWER WINDOW MOTOR REAR LH
P9 POWER WINDOW CONTROL SW FRONT RH
P11 POWER WINDOW CONTROL SW REAR RH
P10 POWER WINDOW CONTROL SW REAR LH
Left kick panel
Instrument panel brace LH

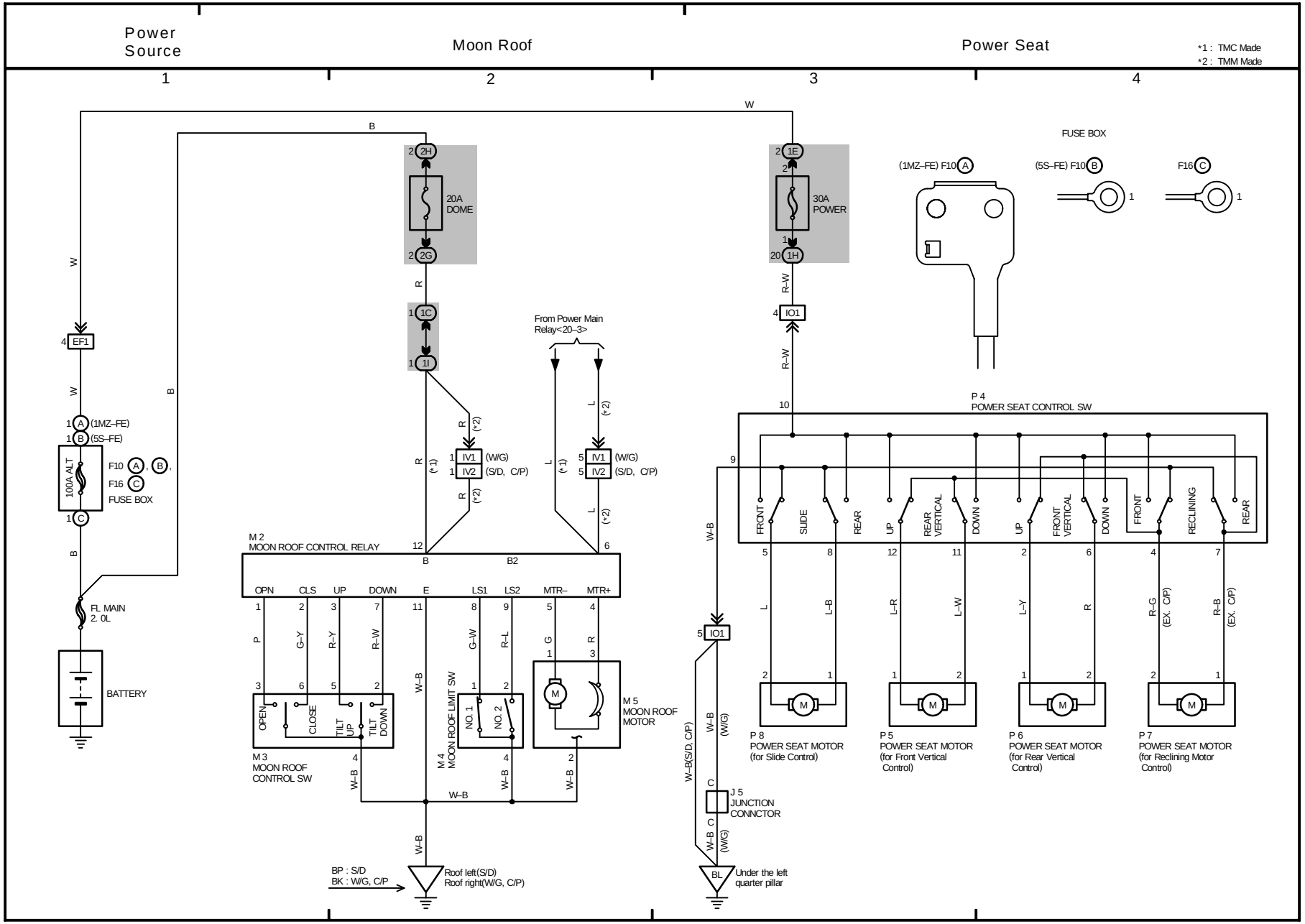
Power Source
Moon Roof
Power Seat
*1 : TMC Made
*2 : TMM Made
1
2
3
4
W
B
2H
20A DOME
2G
1C
1I
1E
30A POWER
1H
IO1
EF1
(1MZ–FE)
(5S–FE)
100A ALT
F10 A , B ,
F16 C
FUSE BOX
FL MAIN 2. 0L
BATTERY
From Power Main Relay<20–3>
R
L
(*1)
(*2)
IV1 (W/G)
IV2 (S/D, C/P)
M 2
MOON ROOF CONTROL RELAY
B
B2
OPN
CLS
UP
DOWN
E
LS1
LS2
MTR–
MTR+
M 3
MOON ROOF CONTROL SW
OPEN
CLOSE
TILT UP
TILT DOWN
M 4
MOON ROOF LIMIT SW
NO. 1
NO. 2
M 5
MOON ROOF MOTOR
W–B
BP : S/D
BK : W/G, C/P
Roof left(S/D)
Roof right(W/G, C/P)
FUSE BOX
(1MZ–FE) F10 A
(5S–FE) F10 B
F16 C
P 4
POWER SEAT CONTROL SW
FRONT
SLIDE
REAR
UP
REAR VERTICAL
DOWN
FRONT VERTICAL
RECLINING
P 8
POWER SEAT MOTOR
(for Slide Control)
P 5
POWER SEAT MOTOR
(for Front Vertical Control)
P 6
POWER SEAT MOTOR
(for Rear Vertical Control)
P 7
POWER SEAT MOTOR
(for Reclining Motor Control)
(EX. C/P)
W–B(S/D, C/P)
W–B (W/G)
J 5
JUNCTION CONNCTOR
BL
Under the left quarter pillar

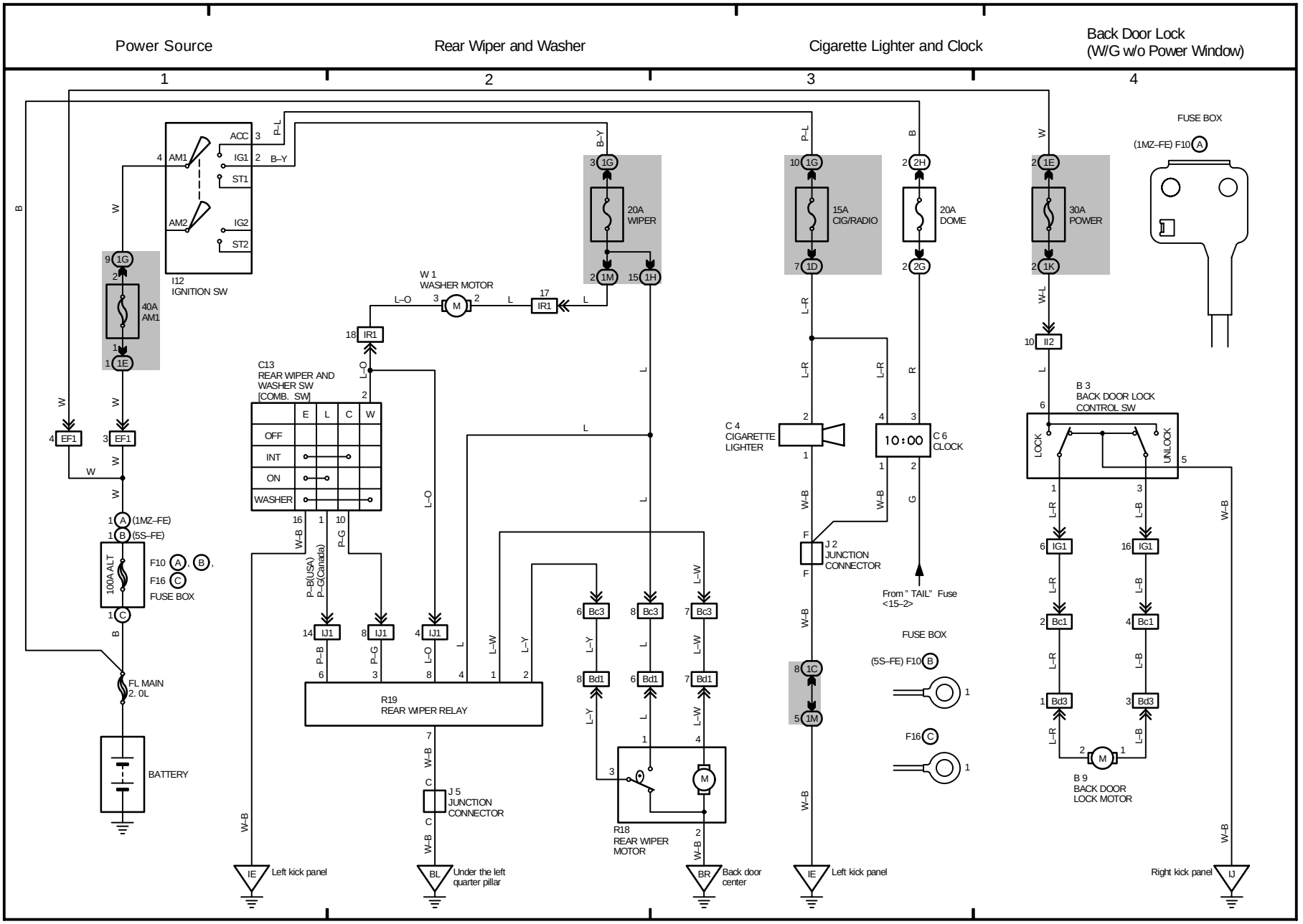
Power Source
Rear Wiper and Washer
Cigarette Lighter and Clock
Back Door Lock
(W/G w/o Power Window)
1
2
3
4
I12
IGNITION SW
ACC
IG1
ST1
IG2
ST2
AM1
AM2
40A
AM1
20A
WIPER
15A
CIG/RADIO
20A
DOME
30A
POWER
W 1
WASHER MOTOR
C13
REAR WIPER AND
WASHER SW
[COMB. SW]
OFF
INT
ON
WASHER
R19
REAR WIPER RELAY
R18
REAR WIPER
MOTOR
C 4
CIGARETTE
LIGHTER
C 6
CLOCK
J 2
JUNCTION
CONNECTOR
J 5
JUNCTION
CONNECTOR
B 3
BACK DOOR LOCK
CONTROL SW
LOCK
UNLOCK
B 9
BACK DOOR
LOCK MOTOR
FUSE BOX
(1MZ–FE) F10 A
(5S–FE) F10 B
F16 C
100A ALT
FL MAIN
2. 0L
BATTERY
From " TAIL" Fuse
<15–2>
Left kick panel
Under the left
quarter pillar
Back door
center
Right kick panel

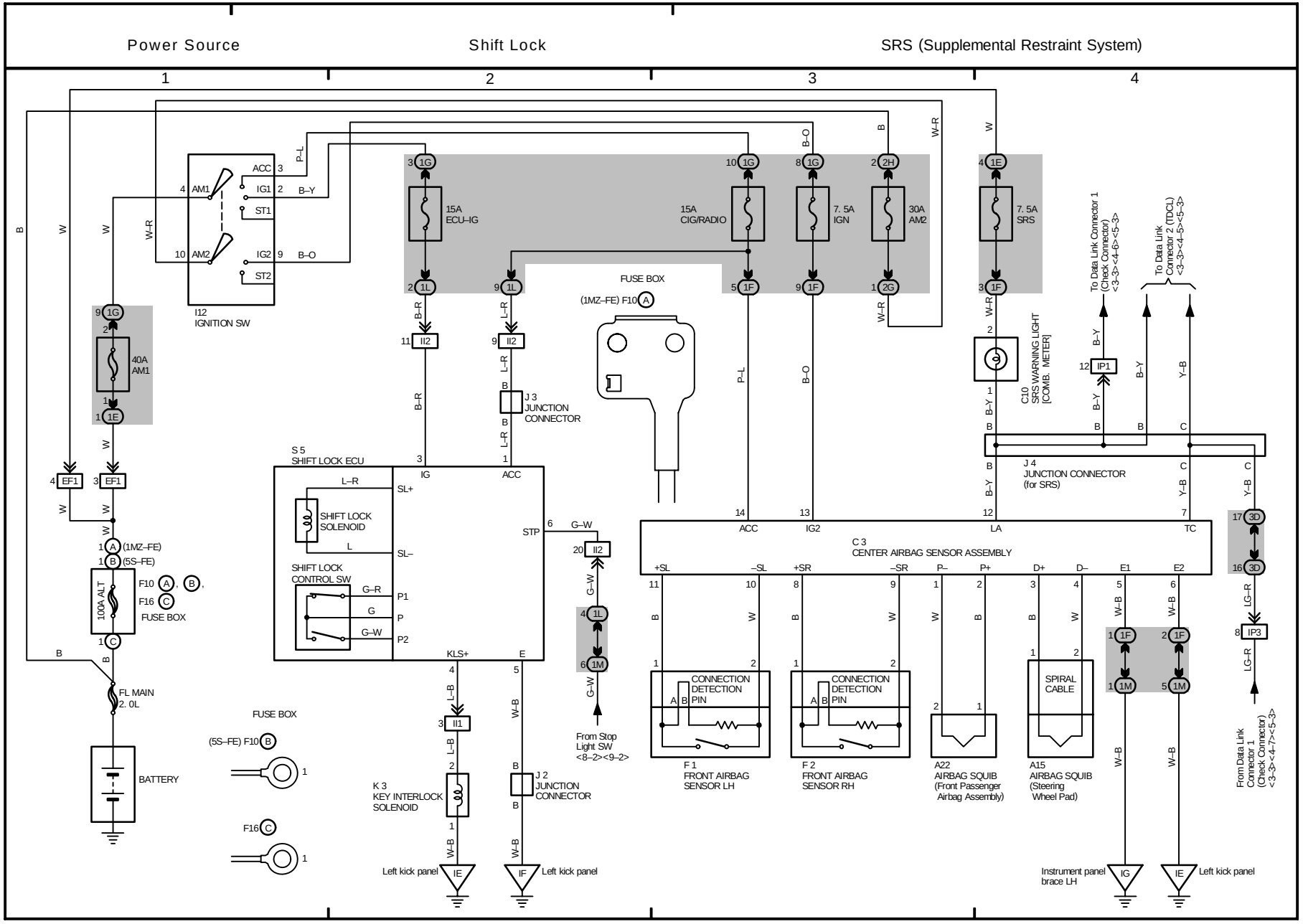
Power Source
Shift Lock
SRS (Supplemental Restraint System)
1
2
3
4
I12
IGNITION SW
ACC
IG1
ST1
IG2
ST2
AM1
AM2
15A
ECU–IG
15A
CIG/RADIO
7. 5A
IGN
30A
AM2
7. 5A
SRS
40A
AM1
FUSE BOX
(1MZ–FE) F10
I1 2
J 3
JUNCTION
CONNECTOR
S 5
SHIFT LOCK ECU
IG
ACC
SL+
SL–
STP
SHIFT LOCK
SOLENOID
SHIFT LOCK
CONTROL SW
P1
P
P2
KLS+
E
K 3
KEY INTERLOCK
SOLENOID
I1 1
J 2
JUNCTION
CONNECTOR
Left kick panel
IE
IF
From Stop
Light SW
<8–2><9–2>
C10
SRS WARNING LIGHT
[COMB. METER]
To Data Link Connector 1
(Check Connector)
<3–3><4–6><5–3>
To Data Link
Connector 2 (TDCL)
<3–3><4–5><5–3>
IP1
J 4
JUNCTION CONNECTOR
(for SRS)
C 3
CENTER AIRBAG SENSOR ASSEMBLY
+SL
–SL
+SR
–SR
P–
P+
D+
D–
E1
E2
ACC
IG2
LA
TC
CONNECTION
DETECTION
PIN
F 1
FRONT AIRBAG
SENSOR LH
F 2
FRONT AIRBAG
SENSOR RH
A22
AIRBAG SQUIB
(Front Passenger
Airbag Assembly)
SPIRAL
CABLE
A15
AIRBAG SQUIB
(Steering
Wheel Pad)
IP3
From Data Link
Connector 1
(Check Connector)
<3–3><4–7><5–3>
Instrument panel
brace LH
IG
IE
Left kick panel
100A ALT
F10
F16
FUSE BOX
(5S–FE)
(5S–FE) F10
FL MAIN
2. 0L
BATTERY

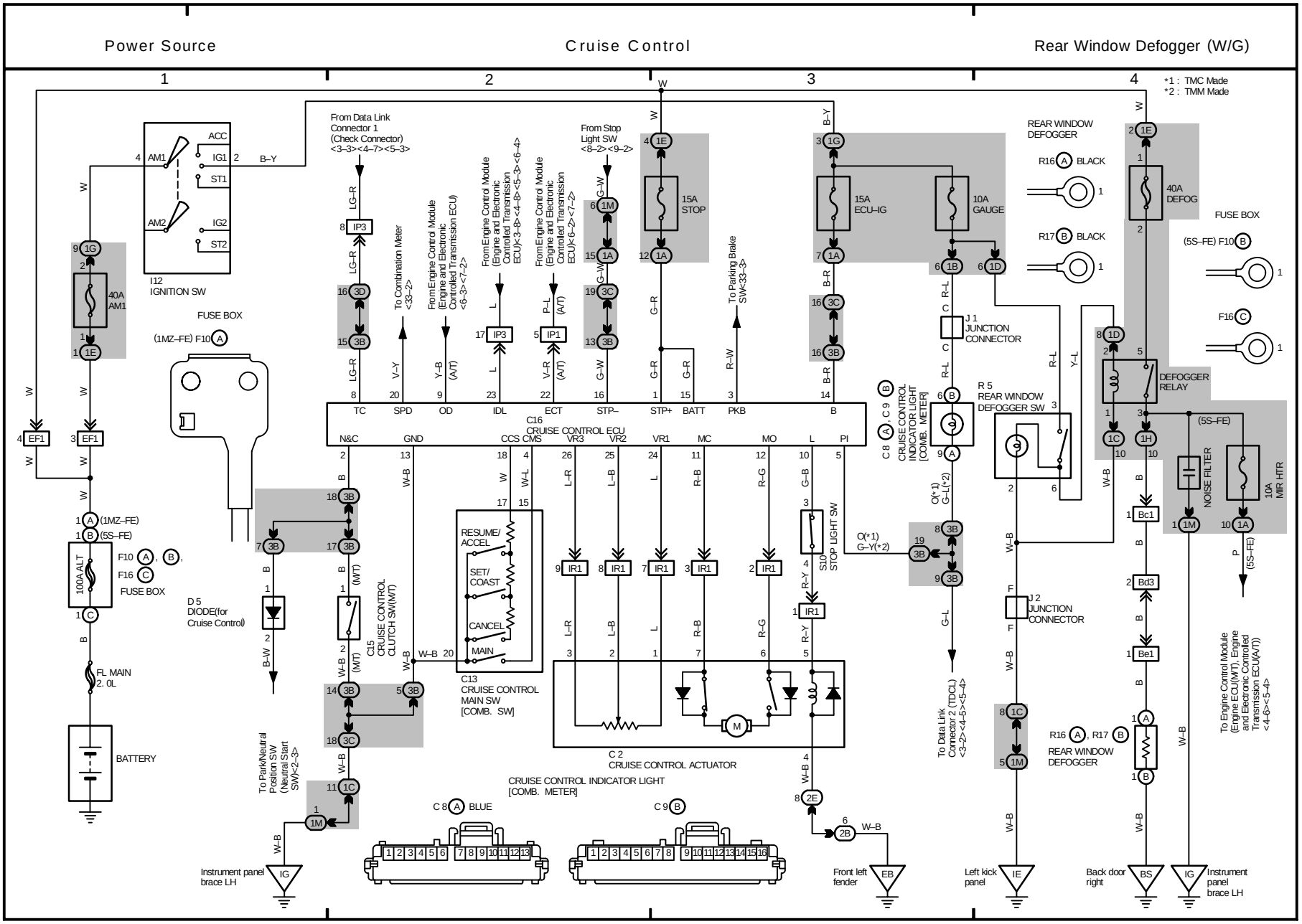
Power Source
Cruise Control
Rear Window Defogger (W/G)
1
2
3
4
*1 : TMC Made
*2 : TMM Made
I12
IGNITION SW
ACC
IG1
ST1
IG2
ST2
AM1
AM2
B–Y
40A
AM1
FUSE BOX
(1MZ–FE) F10 A
EF1
100A ALT
F10 A , B ,
F16 C
FUSE BOX
(1MZ–FE)
(5S–FE)
FL MAIN
2. 0L
BATTERY
D 5
DIODE(for
Cruise Control)
From Data Link
Connector 1
(Check Connector)
<3–3><4–7><5–3>
To Combination Meter
<33–2>
From Engine Control Module
(Engine and Electronic
Controlled Transmission
ECU)<6–3><7–2>
From Engine Control Module
(Engine and Electronic
Controlled Transmission
ECU)<3–8><4–8><5–3><6–4>
From Engine Control Module
(Engine and Electronic
Controlled Transmission
ECU)<6–2><7–2>
From Stop
Light SW
<8–2><9–2>
To Parking Brake
SW<33–3>
15A
STOP
15A
ECU–IG
10A
GAUGE
REAR WINDOW
DEFOGGER
R16 A BLACK
R17 B BLACK
40A
DEFOG
FUSE BOX
(5S–FE) F10 B
F16 C
J 1
JUNCTION
CONNECTOR
R 5
REAR WINDOW
DEFOGGER SW
DEFOGGER
RELAY
(5S–FE)
NOISE FILTER
10A
MIR HTR
TC
SPD
OD
IDL
ECT
STP–
STP+
BATT
PKB
B
C16
CRUISE CONTROL ECU
N&C
GND
CCS
CMS
VR3
VR2
VR1
MC
MO
L
PI
C8 A , C9 B
CRUISE CONTROL
INDICATOR LIGHT
[COMB. METER]
O(*1)
G–L(*2)
O(*1)
G–Y(*2)
S10
STOP LIGHT SW
RESUME/
ACCEL
SET/
COAST
CANCEL
MAIN
C13
CRUISE CONTROL
MAIN SW
[COMB. SW]
C15
CRUISE CONTROL
CLUTCH SW(M/T)
(M/T)
C 2
CRUISE CONTROL ACTUATOR
CRUISE CONTROL INDICATOR LIGHT
[COMB. METER]
C 8 A BLUE
C 9 B
To Park/Neutral
Position SW
(Neutral Start
SW)<2–3>
To Data Link
Connector 2 (TDCL)
<3–2><4–5><5–4>
To Engine Control Module
(Engine ECU(M/T), Engine
and Electronic Controlled
Transmission ECU(A/T))
<4–6><5–4>
R16 A , R17 B
REAR WINDOW
DEFOGGER
Instrument panel
brace LH
Front left
fender
Left kick
panel
Back door
right
Instrument
panel
brace LH

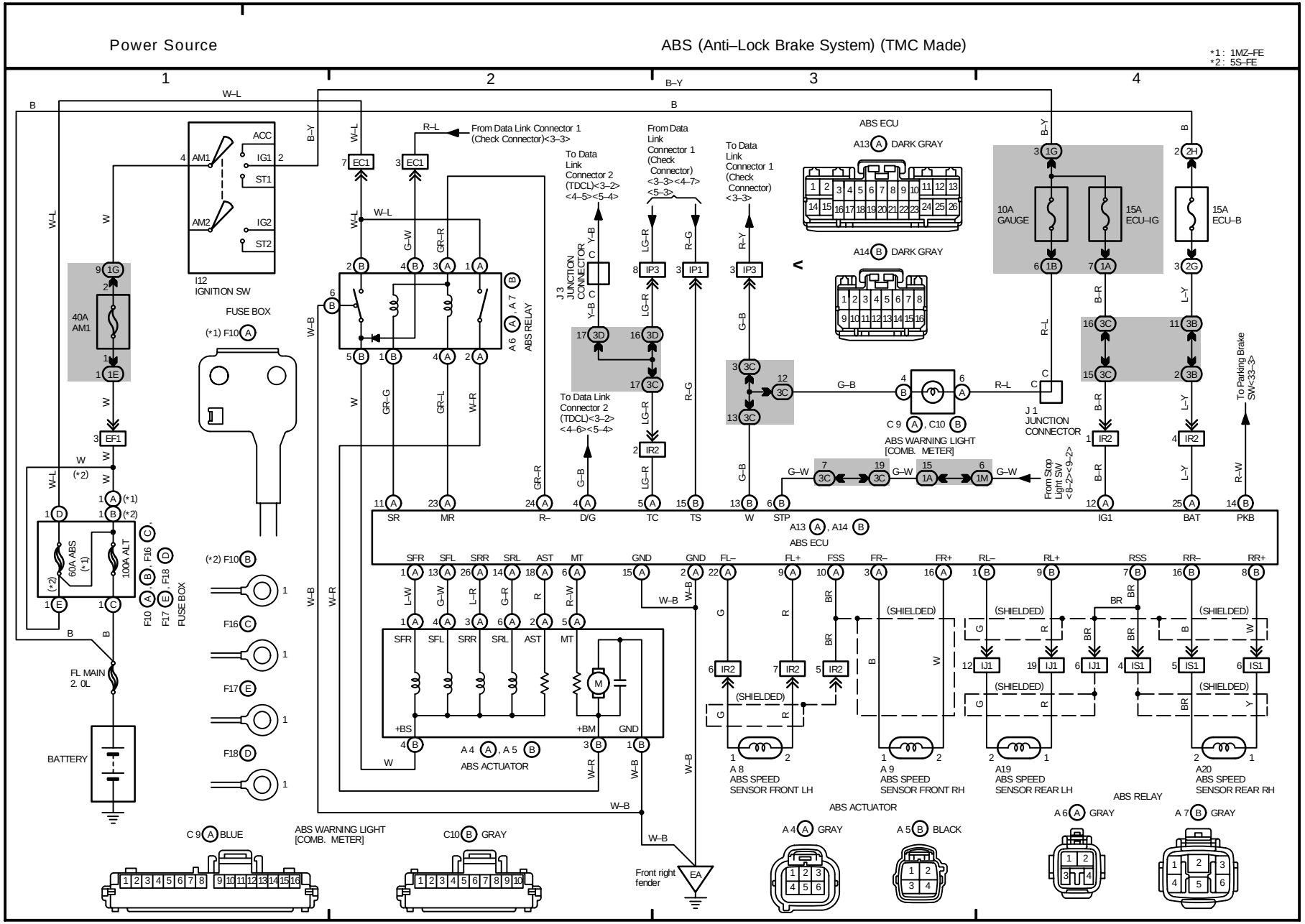
Power Source
ABS (Anti–Lock Brake System) (TMC Made)
*1 : 1MZ–FE
*2 : 5S–FE
1
2
3
4
ACC
IG1
ST1
IG2
ST2
AM1
AM2
I12
IGNITION SW
FUSE BOX
40A
AM1
60A ABS
(*1)
100A ALT
(*2)
F10 , F16
F17 , F18
FUSE BOX
FL MAIN
2. 0L
BATTERY
EF1
EC1
ABS RELAY
A 6 , A 7
From Data Link Connector 1
(Check Connector)<3–3>
To Data
Link
Connector 2
(TDCL)<3–2>
<4–5><5–4>
From Data
Link
Connector 1
(Check
Connector)
<3–3><4–7>
<5–3>
To Data
Link
Connector 1
(Check
Connector)
<3–3>
To Data Link
Connector 2
(TDCL)<3–2>
<4–6><5–4>
J 3
JUNCTION
CONNECTOR
ABS ECU
A13 DARK GRAY
A14 DARK GRAY
10A
GAUGE
15A
ECU–IG
15A
ECU–B
J 1
JUNCTION
CONNECTOR
C 9 , C10
ABS WARNING LIGHT
[COMB. METER]
From Stop
Light SW
<8–2><9–2>
To Parking Brake
SW<33–3>
SR
MR
R–
D/G
TC
TS
W
STP
IG1
BAT
PKB
SFR
SFL
SRR
SRL
AST
MT
GND
GND
FL–
FL+
FSS
FR–
FR+
RL–
RL+
RSS
RR–
RR+
A13 , A14
ABS ECU
A 4 , A 5
ABS ACTUATOR
+BS
+BM
GND
A 8
ABS SPEED
SENSOR FRONT LH
A 9
ABS SPEED
SENSOR FRONT RH
A19
ABS SPEED
SENSOR REAR LH
A20
ABS SPEED
SENSOR REAR RH
(SHIELDED)
ABS RELAY
A 6 GRAY
A 7 GRAY
ABS ACTUATOR
A 4 GRAY
A 5 BLACK
C 9 BLUE
ABS WARNING LIGHT
[COMB. METER]
C10 GRAY
Front right
fender
EA

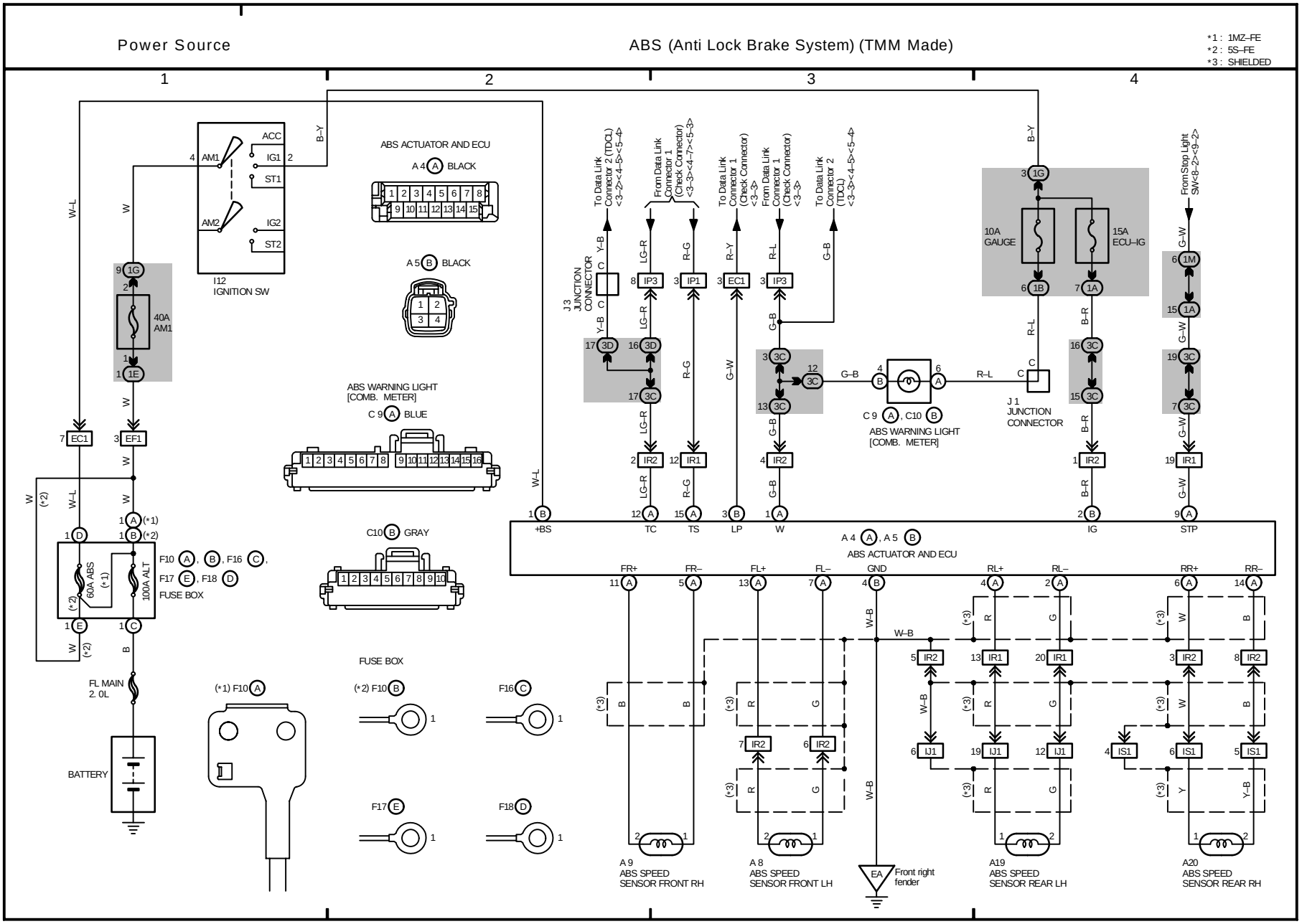
Power Source
ABS (Anti Lock Brake System) (TMM Made)
*1 : 1MZ–FE
*2 : 5S–FE
*3 : SHIELDED
1
2
3
4
ACC
IG1
ST1
IG2
ST2
AM1
AM2
I12
IGNITION SW
40A AM1
1G
1E
EC1
EF1
60A ABS (*1)
100A ALT
(*2)
F10 A, B, F16 C,
F17 E, F18 D
FUSE BOX
FL MAIN 2.0L
BATTERY
(*1) F10 A
(*2) F10 B
F16 C
F17 E
F18 D
FUSE BOX
ABS ACTUATOR AND ECU
A 4 A BLACK
A 5 B BLACK
ABS WARNING LIGHT [COMB. METER]
C 9 A BLUE
C10 B GRAY
J3 JUNCTION CONNECTOR
To Data Link Connector 2 (TDCL) <3-2><4-5><5-4>
From Data Link Connector 1 (Check Connector) <3-3><4-7><5-3>
To Data Link Connector 1 (Check Connector) <3-3>
From Data Link Connector 1 (Check Connector) <3-3>
To Data Link Connector 2 (TDCL) <3-3><4-5><5-4>
10A GAUGE
15A ECU–IG
J1 JUNCTION CONNECTOR
From Stop Light SW<8-2><9-2>
+BS
TC
TS
LP
W
IG
STP
A 4 A, A 5 B
ABS ACTUATOR AND ECU
FR+
FR–
FL+
FL–
GND
RL+
RL–
RR+
RR–
A 9 ABS SPEED SENSOR FRONT RH
A 8 ABS SPEED SENSOR FRONT LH
EA Front right fender
A19 ABS SPEED SENSOR REAR LH
A20 ABS SPEED SENSOR REAR RH

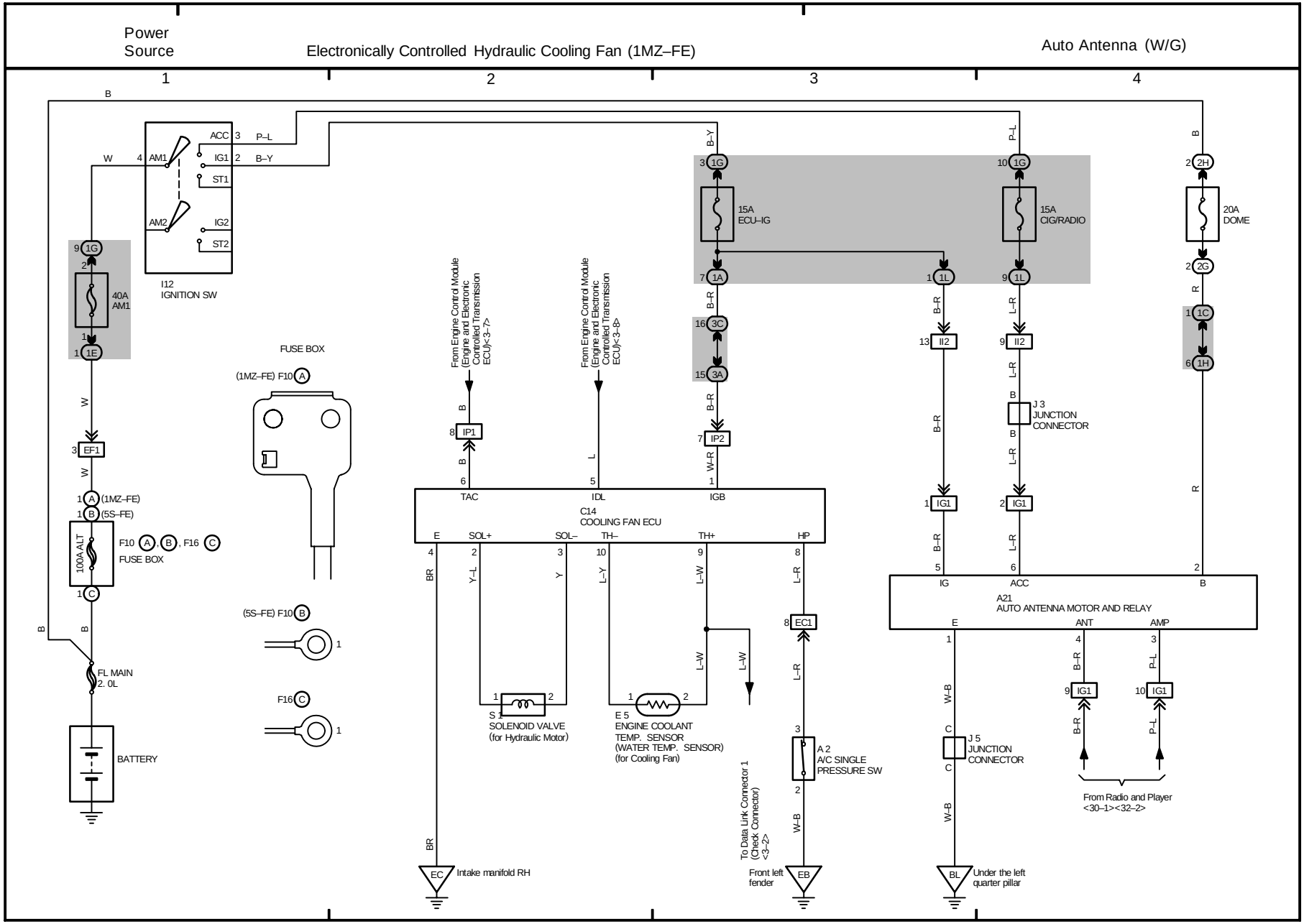
Power Source
Electronically Controlled Hydraulic Cooling Fan (1MZ–FE)
Auto Antenna (W/G)
1
2
3
4
B
W
4 AM1
AM2
ACC 3 P–L
IG1 2 B–Y
ST1
IG2
ST2
I12
IGNITION SW
9 1G
2
40A
AM1
1
1 1E
W
3 EF1
W
1 A (1MZ–FE)
1 B (5S–FE)
100A ALT
F10 A , B , F16 C
FUSE BOX
1 C
B
B
FL MAIN
2. 0L
BATTERY
FUSE BOX
(1MZ–FE) F10 A
(5S–FE) F10 B
1
F16 C
1
From Engine Control Module (Engine and Electronic Controlled Transmission ECU)<3–7>
From Engine Control Module (Engine and Electronic Controlled Transmission ECU)<3–8>
B
8 IP1
B
6
TAC
L
5
IDL
B–R
7 IP2
W–R
1
IGB
C14
COOLING FAN ECU
E
SOL+
SOL–
TH–
TH+
HP
4
BR
2
Y–L
3
Y
10
L–Y
9
L–W
8
L–R
S 1
SOLENOID VALVE
(for Hydraulic Motor)
E 5
ENGINE COOLANT TEMP. SENSOR
(WATER TEMP. SENSOR)
(for Cooling Fan)
L–W
L–W
8 EC1
L–R
3
A 2
A/C SINGLE PRESSURE SW
2
W–B
To Data Link Connector 1 (Check Connector) <3–2>
BR
EC
Intake manifold RH
Front left fender
EB
B–Y
3 1G
15A
ECU–IG
7 1A
B–R
16 3C
B–R
15 3A
B–R
P–L
10 1G
15A
CIG/RADIO
1 1L
B–R
13 I12
B–R
1 IG1
B–R
5
IG
9 1L
L–R
9 I12
L–R
B
J 3
JUNCTION CONNECTOR
B
L–R
2 IG1
L–R
6
ACC
B
2 2H
20A
DOME
2 2G
R
1 1C
6 1H
R
2
B
A21
AUTO ANTENNA MOTOR AND RELAY
E
ANT
AMP
1
W–B
C
J 5
JUNCTION CONNECTOR
C
W–B
BL
Under the left quarter pillar
4
B–R
9 IG1
B–R
3
P–L
10 IG1
P–L
From Radio and Player <30–1><32–2>

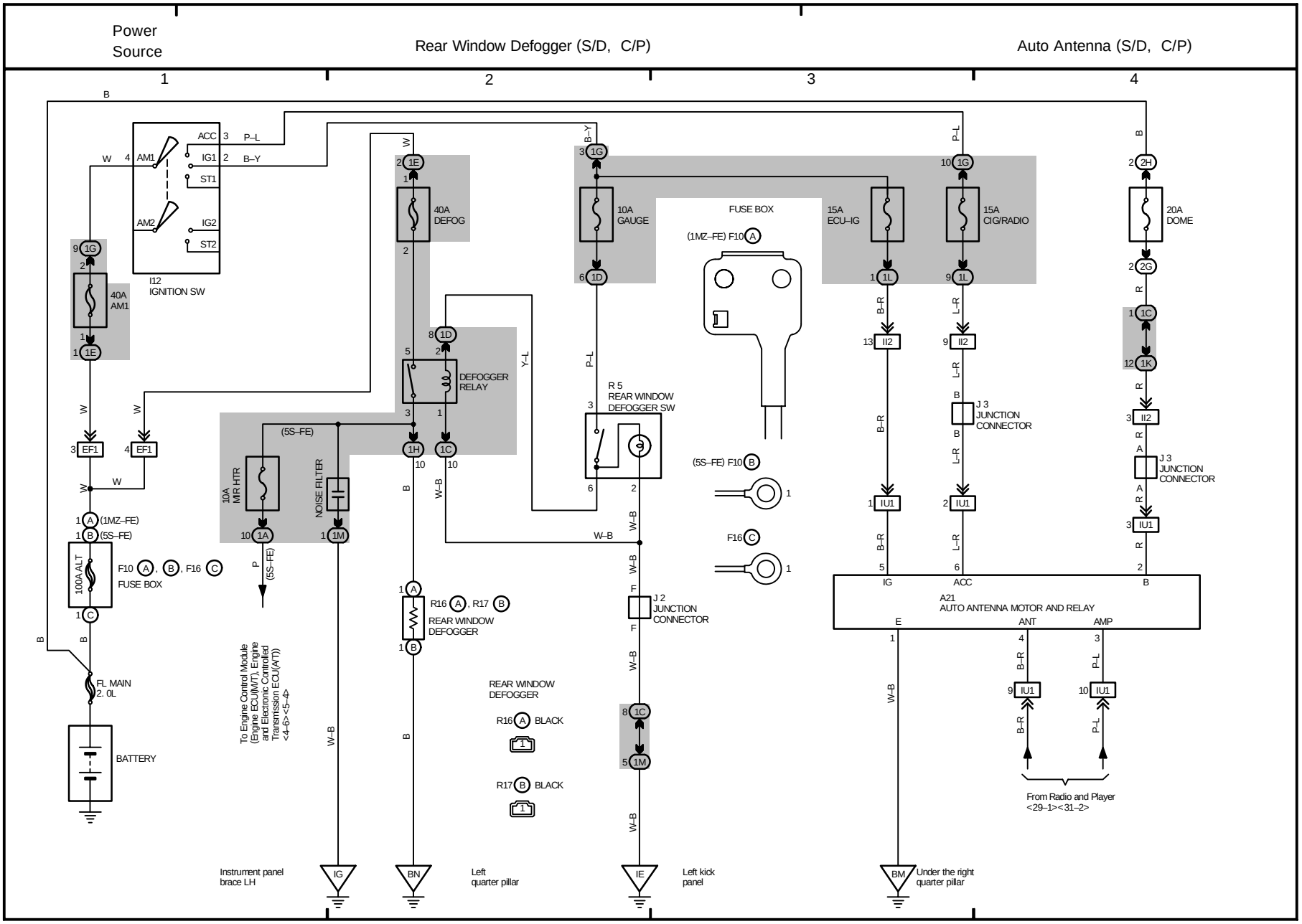
Power Source
Rear Window Defogger (S/D, C/P)
Auto Antenna (S/D, C/P)
1
2
3
4
ACC
IG1
ST1
IG2
ST2
AM1
AM2
I12
IGNITION SW
40A AM1
40A DEFOG
DEFOGGER RELAY
10A GAUGE
FUSE BOX
15A ECU–IG
15A CIG/RADIO
20A DOME
R 5
REAR WINDOW DEFOGGER SW
(1MZ–FE) F10
(5S–FE) F10
F16
J 3 JUNCTION CONNECTOR
J 2 JUNCTION CONNECTOR
10A MIR HTR
NOISE FILTER
100A ALT
F10 , , F16
FUSE BOX
FL MAIN 2. 0L
BATTERY
To Engine Control Module (Engine ECU(M/T), Engine and Electronic Controlled Transmission ECU(A/T)) <4-6><5-4>
R16 , R17
REAR WINDOW DEFOGGER
REAR WINDOW DEFOGGER
R16 BLACK
R17 BLACK
A21
AUTO ANTENNA MOTOR AND RELAY
IG
ACC
B
E
ANT
AMP
From Radio and Player <29–1><31–2>
Instrument panel brace LH
IG
BN
Left quarter pillar
IE
Left kick panel
BM
Under the right quarter pillar

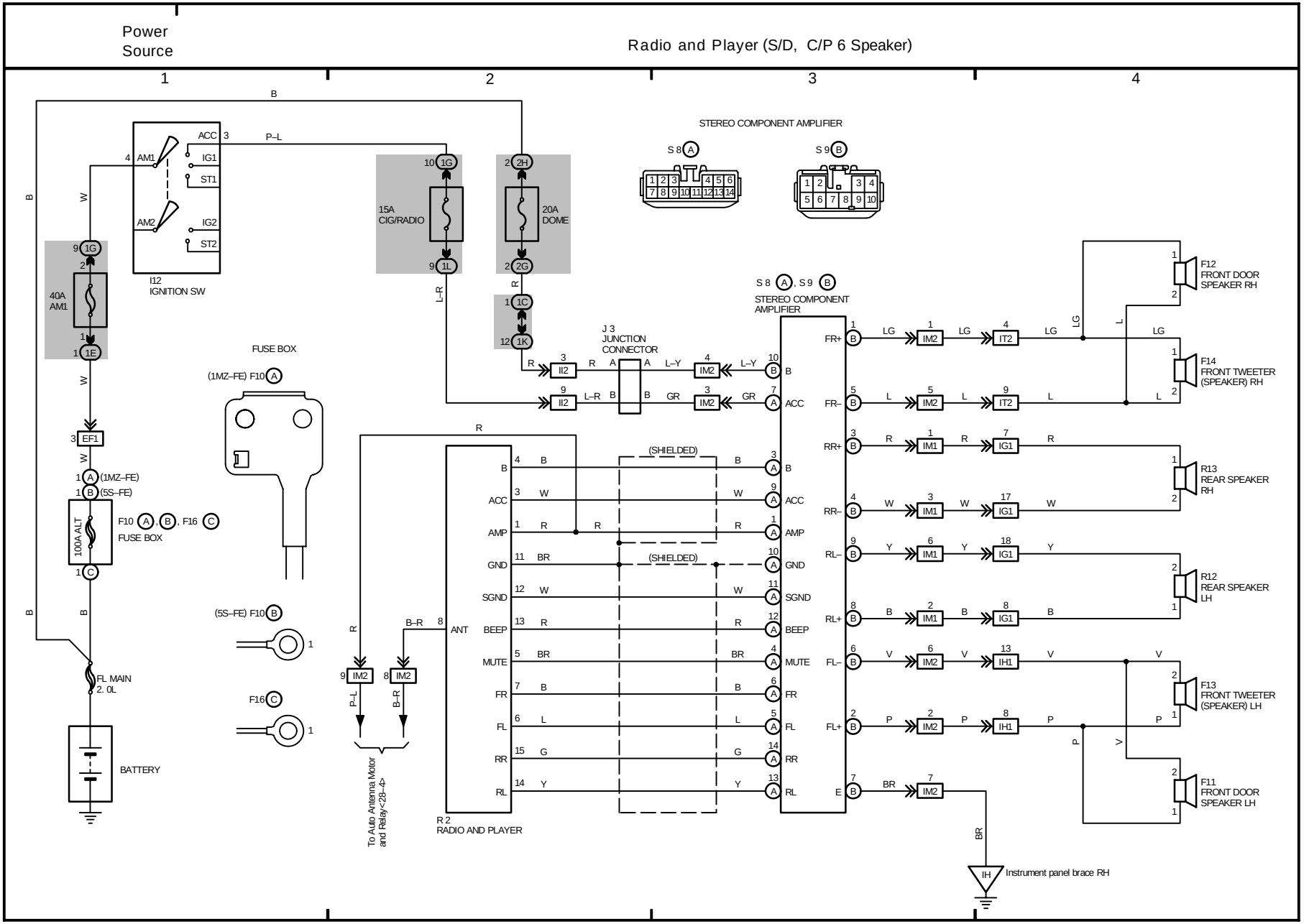
Power Source
Radio and Player (S/D, C/P 6 Speaker)
1
2
3
4
STEREO COMPONENT AMPLIFIER
S 8 A
S 9 B
I12
IGNITION SW
ACC
IG1
ST1
IG2
ST2
AM1
AM2
40A AM1
15A CIG/RADIO
20A DOME
J 3
JUNCTION CONNECTOR
S 8 A , S 9 B
STEREO COMPONENT AMPLIFIER
FUSE BOX
(1MZ–FE) F10 A
(5S–FE) F10 B
F16 C
EF1
(1MZ–FE)
(5S–FE)
100A ALT
F10 A , B , F16 C
FUSE BOX
FL MAIN
2. 0L
BATTERY
R 2
RADIO AND PLAYER
ANT
BEEP
MUTE
SGND
GND
AMP
ACC
B
RR
FL
RL
FR
(SHIELDED)
To Auto Antenna Motor and Relay<28–4>
FR+
FR–
RR+
RR–
RL+
RL–
FL+
FL–
E
F12
FRONT DOOR SPEAKER RH
F14
FRONT TWEETER (SPEAKER) RH
R13
REAR SPEAKER RH
R12
REAR SPEAKER LH
F13
FRONT TWEETER (SPEAKER) LH
F11
FRONT DOOR SPEAKER LH
IH
Instrument panel brace RH

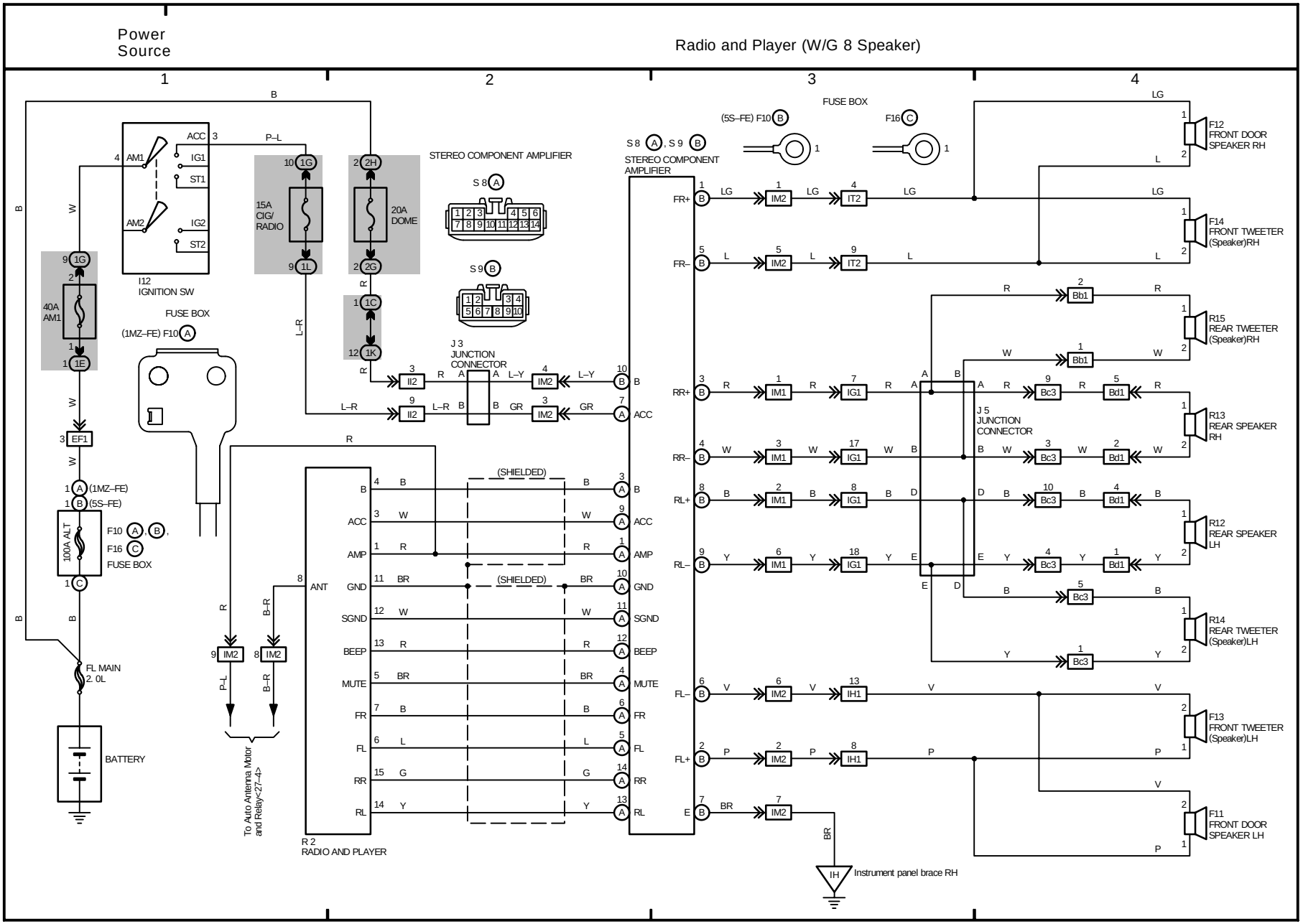
Power Source
Radio and Player (W/G 8 Speaker)
1
2
3
4
I12 IGNITION SW
ACC
IG1
ST1
ST2
AM1
AM2
IG2
40A AM1
15A CIG/ RADIO
20A DOME
FUSE BOX
(1MZ–FE) F10 A
(5S–FE) F10 B
F16 C
J 3 JUNCTION CONNECTOR
STEREO COMPONENT AMPLIFIER
S 8 A
S 9 B
J 5 JUNCTION CONNECTOR
100A ALT
F10 A , B ,
F16 C
FUSE BOX
(1MZ–FE)
(5S–FE)
EF1
FL MAIN 2. 0L
BATTERY
To Auto Antenna Motor and Relay<27–4>
R 2 RADIO AND PLAYER
ANT
GND
SGND
BEEP
MUTE
AMP
ACC
FR
FL
RR
RL
(SHIELDED)
F12 FRONT DOOR SPEAKER RH
F14 FRONT TWEETER (Speaker)RH
R15 REAR TWEETER (Speaker)RH
R13 REAR SPEAKER RH
R12 REAR SPEAKER LH
R14 REAR TWEETER (Speaker)LH
F13 FRONT TWEETER (Speaker)LH
F11 FRONT DOOR SPEAKER LH
IH
Instrument panel brace RH

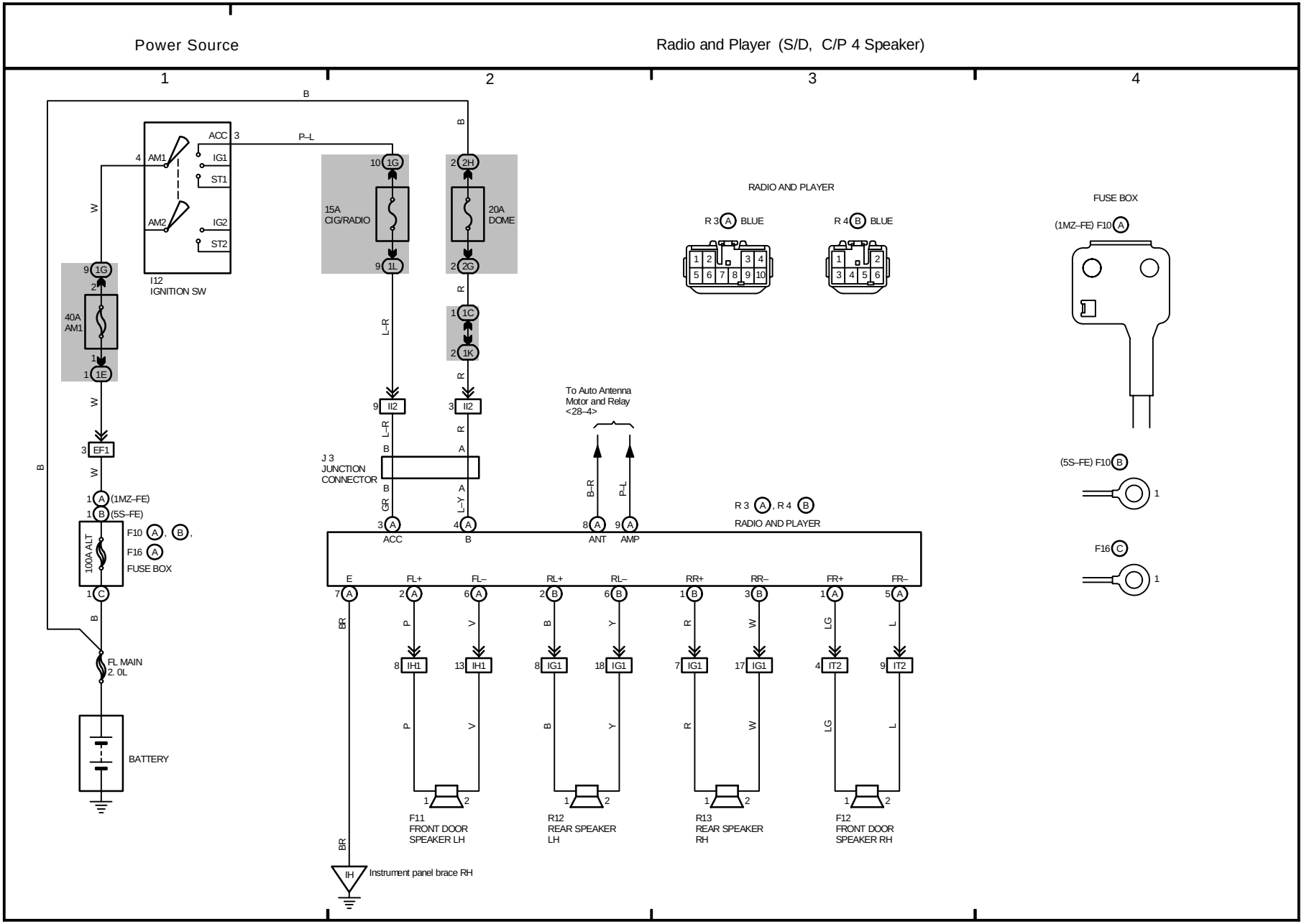
Power Source
Radio and Player (S/D, C/P 4 Speaker)
1
2
3
4
B
ACC
IG1
ST1
IG2
ST2
AM1
AM2
I12
IGNITION SW
P–L
15A
CIG/RADIO
20A
DOME
40A
AM1
L–R
R
J 3
JUNCTION
CONNECTOR
To Auto Antenna
Motor and Relay
<28–4>
B–R
P–L
ACC
B
ANT
AMP
RADIO AND PLAYER
R 3 A BLUE
R 4 B BLUE
R 3 A , R 4 B
RADIO AND PLAYER
FUSE BOX
(1MZ–FE) F10 A
(5S–FE) F10 B
F16 C
(1MZ–FE)
(5S–FE)
100A ALT
F10 A , B ,
F16 A
FUSE BOX
FL MAIN
2. 0L
BATTERY
E
FL+
FL–
RL+
RL–
RR+
RR–
FR+
FR–
BR
P
V
B
Y
R
W
LG
L
F11
FRONT DOOR
SPEAKER LH
R12
REAR SPEAKER
LH
R13
REAR SPEAKER
RH
F12
FRONT DOOR
SPEAKER RH
IH
Instrument panel brace RH

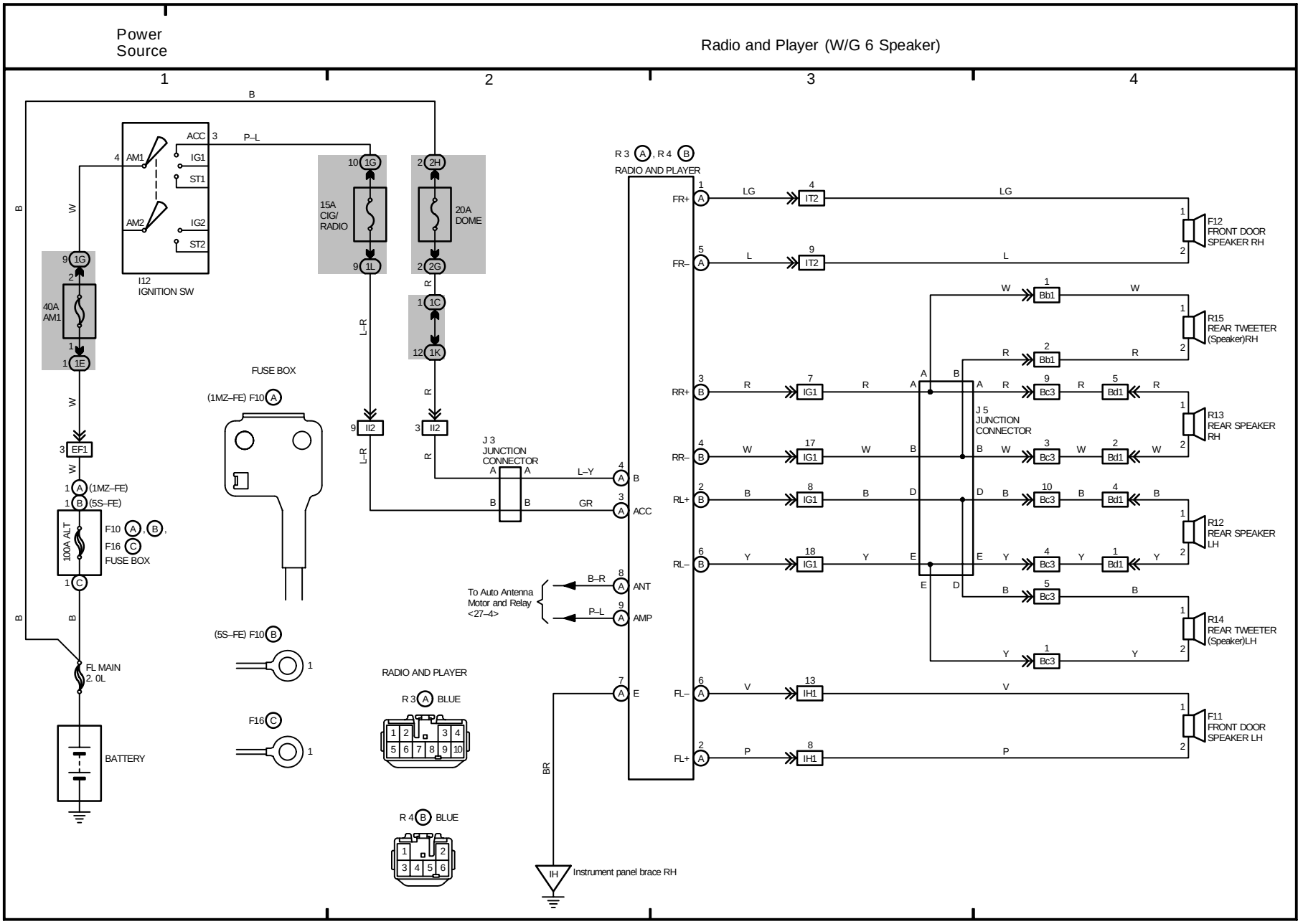
Power Source
Radio and Player (W/G 6 Speaker)
1
2
3
4
B
ACC
IG1
ST1
IG2
ST2
AM1
AM2
I12
IGNITION SW
P–L
15A CIG/ RADIO
20A DOME
40A AM1
EF1
(1MZ–FE)
(5S–FE)
100A ALT
F10 A , B , F16 C FUSE BOX
FL MAIN 2. 0L
BATTERY
FUSE BOX
(1MZ–FE) F10 A
(5S–FE) F10 B
F16 C
L–R
R
II2
J 3 JUNCTION CONNECTOR
L–Y
GR
ACC
ANT
AMP
B–R
P–L
To Auto Antenna Motor and Relay <27–4>
RADIO AND PLAYER
R 3 A BLUE
R 4 B BLUE
BR
IH
Instrument panel brace RH
R 3 A , R 4 B
RADIO AND PLAYER
FR+
FR–
RR+
RR–
RL+
RL–
FL–
FL+
LG
L
W
R
B
Y
V
P
IT2
IG1
IH1
Bb1
Bc3
Bd1
J 5 JUNCTION CONNECTOR
F12 FRONT DOOR SPEAKER RH
R15 REAR TWEETER (Speaker)RH
R13 REAR SPEAKER RH
R12 REAR SPEAKER LH
R14 REAR TWEETER (Speaker)LH
F11 FRONT DOOR SPEAKER LH

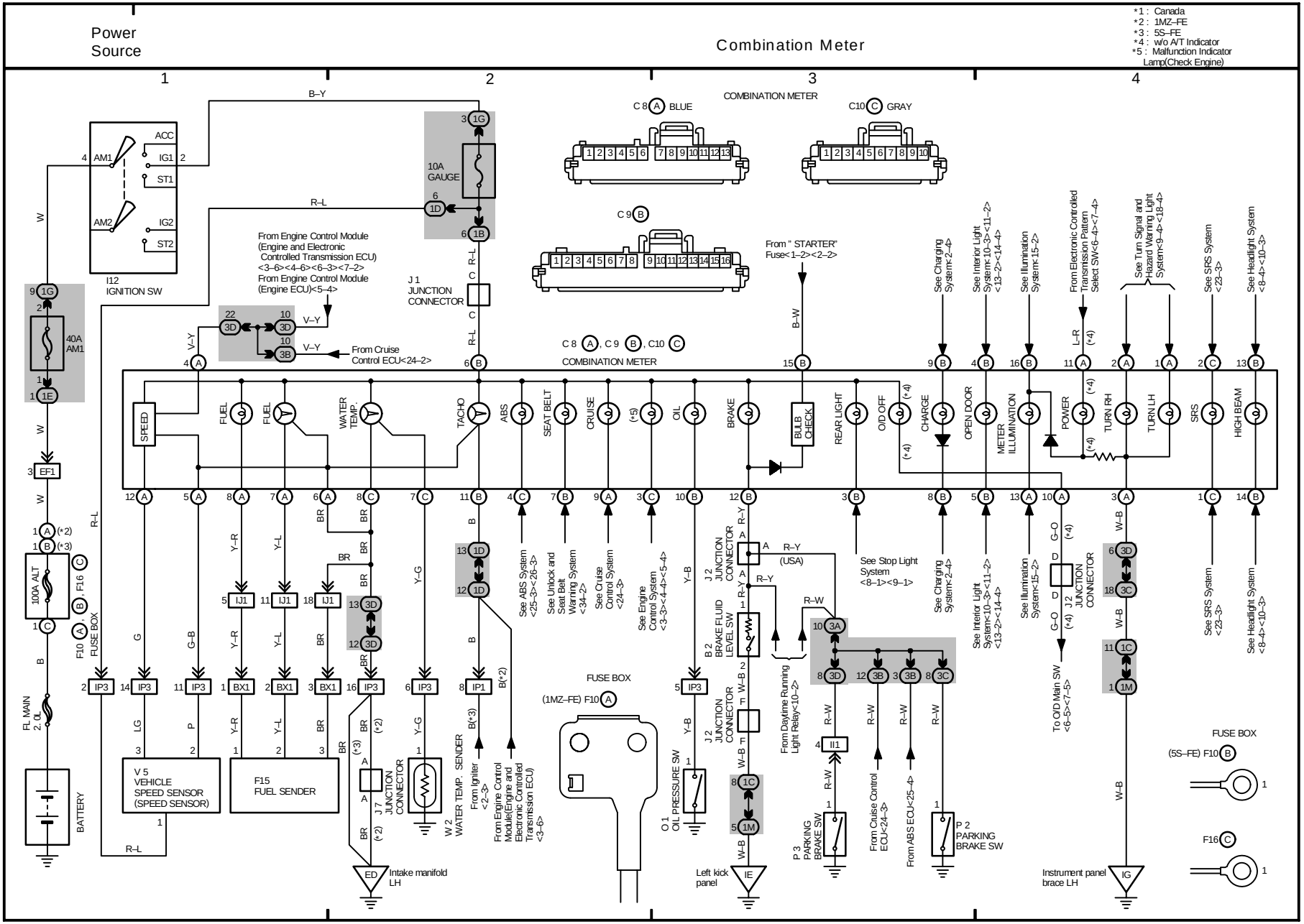
Power Source
Combination Meter
*1 : Canada
*2 : 1MZ–FE
*3 : 5S–FE
*4 : w/o A/T Indicator
*5 : Malfunction Indicator Lamp(Check Engine)
COMBINATION METER
C 8 A BLUE
C10 C GRAY
C 9 B
I12 IGNITION SW
40A AM1
10A GAUGE
J 1 JUNCTION CONNECTOR
From Engine Control Module (Engine and Electronic Controlled Transmission ECU) <3–6><4–6><6–3><7–2>
From Engine Control Module (Engine ECU)<5–4>
From Cruise Control ECU<24–2>
From " STARTER" Fuse<1–2><2–2>
SPEED
FUEL
WATER TEMP.
TACHO
ABS
SEAT BELT
CRUISE
OIL
BRAKE
BULB CHECK
REAR LIGHT
O/D OFF
CHARGE
OPEN DOOR
METER ILLUMINATION
POWER
TURN RH
TURN LH
SRS
HIGH BEAM
See Charging System<2–4>
See Interior Light System<10–3><11–2><13–2><14–4>
See Illumination System<15–2>
From Electronic Controlled Transmission Pattern Select SW<6–4><7–4>
See Turn Signal and Hazard Warning Light System<9–4><18–4>
See SRS System <23–3>
See Headlight System <8–4><10–3>
100A ALT
FL MAIN 2. 0L
BATTERY
FUSE BOX
EF1
V 5 VEHICLE SPEED SENSOR (SPEED SENSOR)
F15 FUEL SENDER
J7 JUNCTION CONNECTOR
W 2 WATER TEMP. SENDER
From Igniter <2–3>
From Engine Control Module(Engine and Electronic Controlled Transmission ECU) <3–6>
Intake manifold LH
B 2 BRAKE FLUID LEVEL SW
J 2 JUNCTION CONNECTOR
O 1 OIL PRESSURE SW
Left kick panel
See ABS System <25–3><26–3>
See Unlock and Seat Belt Warning System <34–2>
See Cruise Control System <24–3>
See Engine Control System <3–3><4–4><5–4>
See Stop Light System <8–1><9–1>
From Daytime Running Light Relay<10–2>
P 3 PARKING BRAKE SW
From Cruise Control ECU<24–3>
From ABS ECU<25–4>
P 2 PARKING BRAKE SW
To O/D Main SW <6–5><7–5>
Instrument panel brace LH
FUSE BOX (1MZ–FE) F10
FUSE BOX (5S–FE) F10
F16

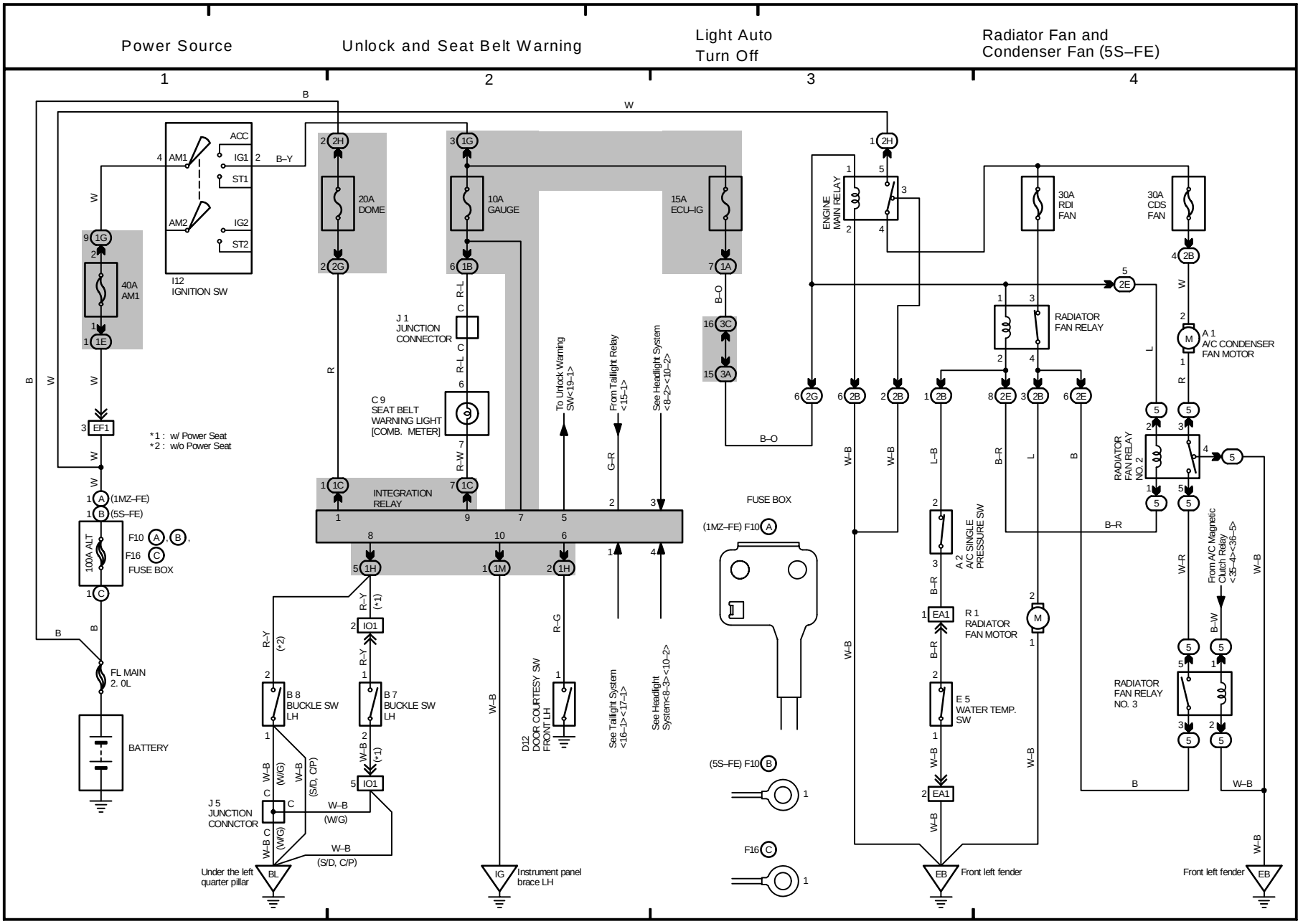
Power Source
Unlock and Seat Belt Warning
Light Auto Turn Off
Radiator Fan and Condenser Fan (5S–FE)
1
2
3
4
I12 IGNITION SW
40A AM1
20A DOME
10A GAUGE
15A ECU–IG
J 1 JUNCTION CONNECTOR
C 9 SEAT BELT WARNING LIGHT [COMB. METER]
INTEGRATION RELAY
ENGINE MAIN RELAY
30A RDI FAN
30A CDS FAN
RADIATOR FAN RELAY
A 1 A/C CONDENSER FAN MOTOR
RADIATOR FAN RELAY NO. 2
RADIATOR FAN RELAY NO. 3
R 1 RADIATOR FAN MOTOR
A 2 A/C SINGLE PRESSURE SW
E 5 WATER TEMP. SW
From A/C Magnetic Clutch Relay <35–4><36–5>
100A ALT
FL MAIN 2. 0L
BATTERY
FUSE BOX
F10 A, B
F16 C
(1MZ–FE)
(5S–FE)
*1 : w/ Power Seat
*2 : w/o Power Seat
B 8 BUCKLE SW LH
B 7 BUCKLE SW LH
J 5 JUNCTION CONNCTOR
D12 DOOR COURTESY SW FRONT LH
To Unlock Warning SW<19–1>
From Taillight Relay <15–1>
See Headlight System <8–2><10–2>
See Taillight System <16–1><17–1>
See Headlight System<8–3><10–2>
Under the left quarter pillar
Instrument panel brace LH
Front left fender
Front left fender

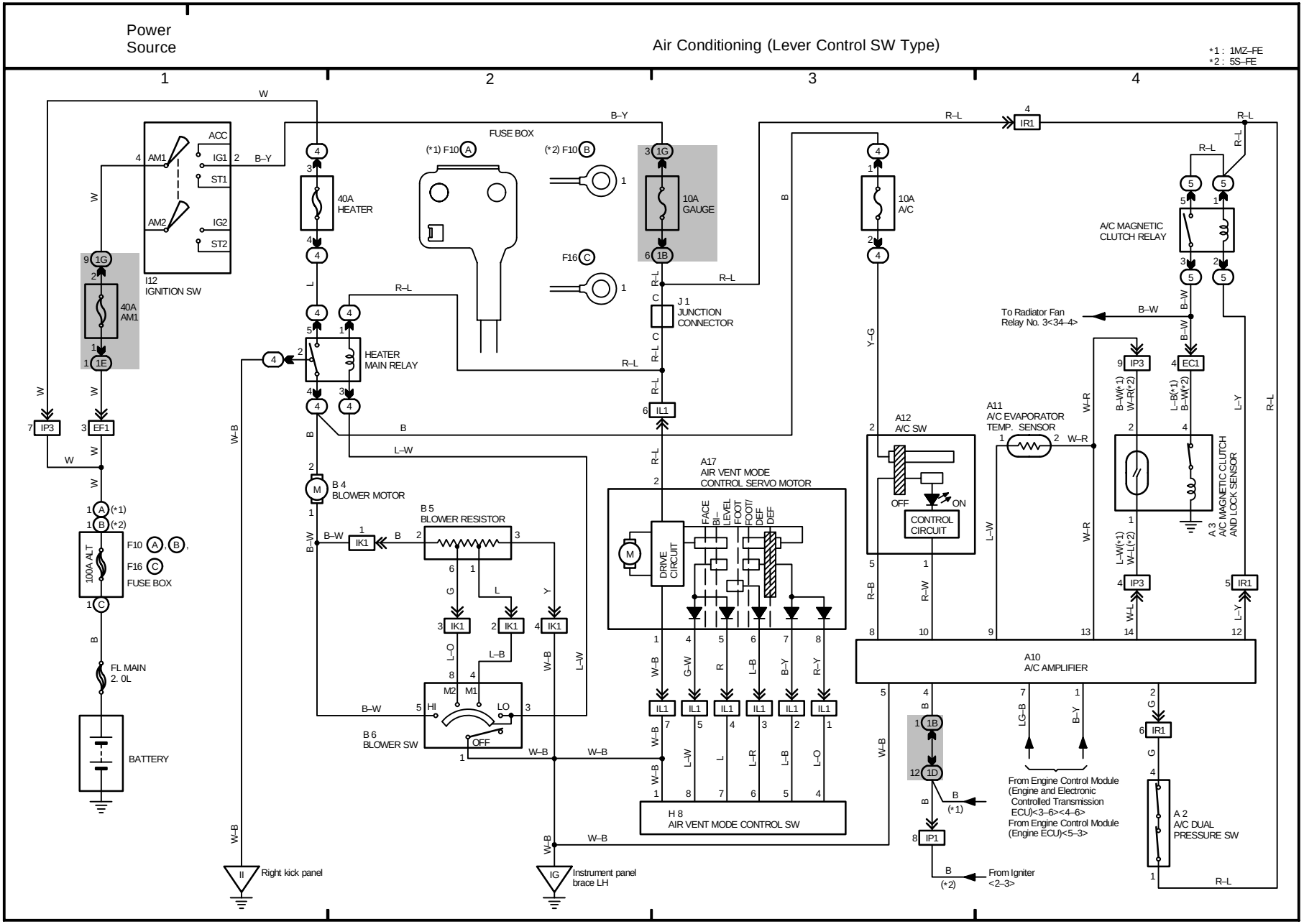
Power Source
Air Conditioning (Lever Control SW Type)
*1 : 1MZ–FE
*2 : 5S–FE
1
2
3
4
I12 IGNITION SW
ACC
IG1
ST1
IG2
ST2
AM1
AM2
40A AM1
40A HEATER
FUSE BOX
(*1) F10 A
(*2) F10 B
F16 C
10A GAUGE
10A A/C
J 1 JUNCTION CONNECTOR
HEATER MAIN RELAY
IR1
A/C MAGNETIC CLUTCH RELAY
To Radiator Fan Relay No. 3<34–4>
B 4 BLOWER MOTOR
B 5 BLOWER RESISTOR
B 6 BLOWER SW
A17 AIR VENT MODE CONTROL SERVO MOTOR
DRIVE CIRCUIT
FACE
BI–LEVEL
FOOT/ DEF
DEF
H 8 AIR VENT MODE CONTROL SW
A12 A/C SW
OFF
ON
CONTROL CIRCUIT
A11 A/C EVAPORATOR TEMP. SENSOR
A 3 A/C MAGNETIC CLUTCH AND LOCK SENSOR
A10 A/C AMPLIFIER
From Engine Control Module (Engine and Electronic Controlled Transmission ECU)<3–6><4–6>
From Engine Control Module (Engine ECU)<5–3>
From Igniter <2–3>
A 2 A/C DUAL PRESSURE SW
100A ALT
F10 A B, F16 C FUSE BOX
FL MAIN 2. 0L
BATTERY
Right kick panel
Instrument panel brace LH

(Cont. next page)

Power Source

Air Conditioning (Push Control SW Type)

*1: 1MZ–FE
*2: 5S–FE

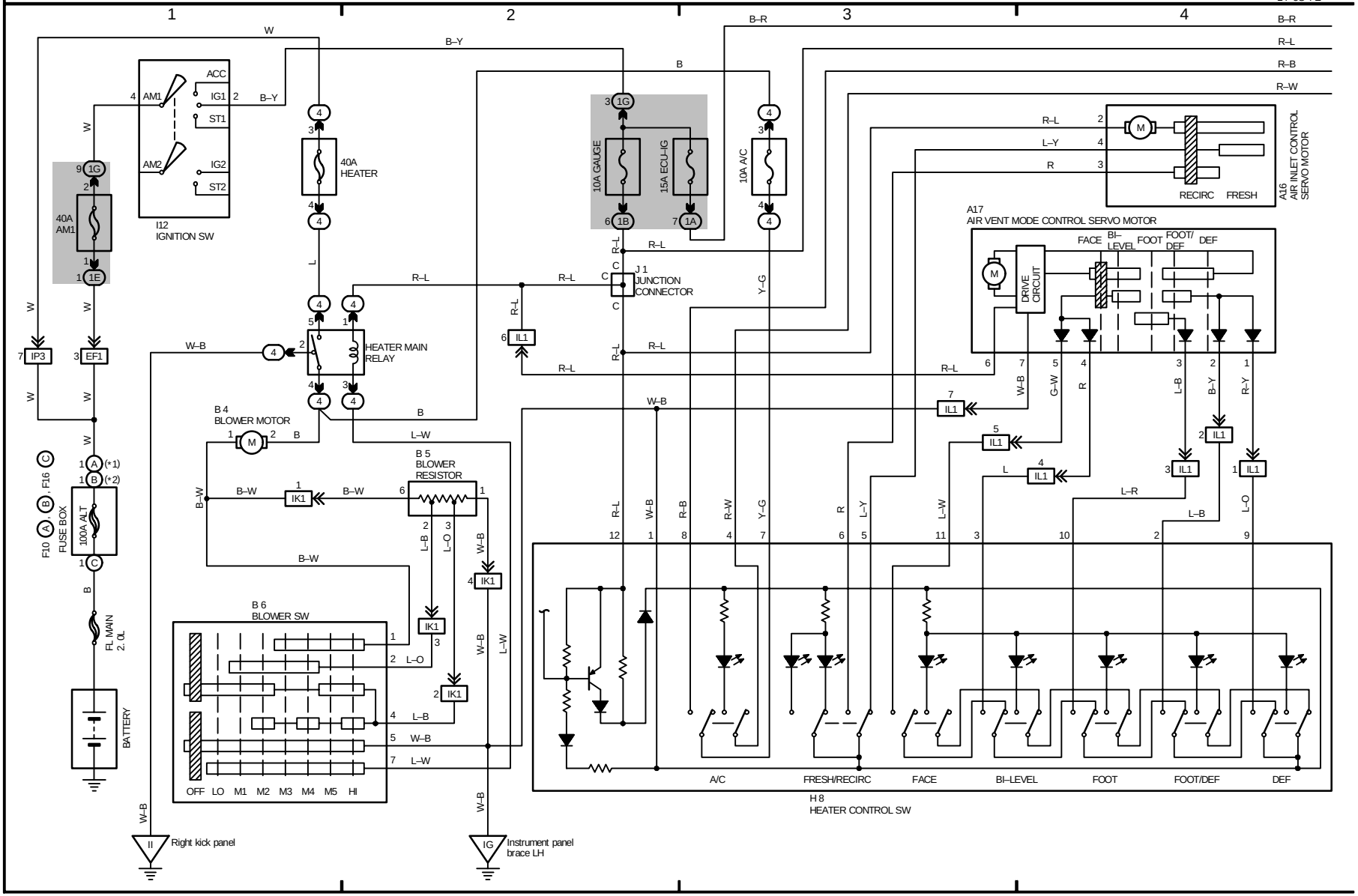

36 CAMRY (Cont' d)

